IDENTIFICATION STAMP
DIV. OF THE STATE ARCHITECT
APP: 02-119490 INC:
REVIEWED FOR
SS ☑ FLS ☑ ACS ☑
DATE: 09/13/2022

DAVIS SR HIGH SCHOOL AQUATICS CENTER
DAVIS JOINT UNIFIED SCHOOL DISTRICT

315 W 14TH ST., DAVIS, CA
95616

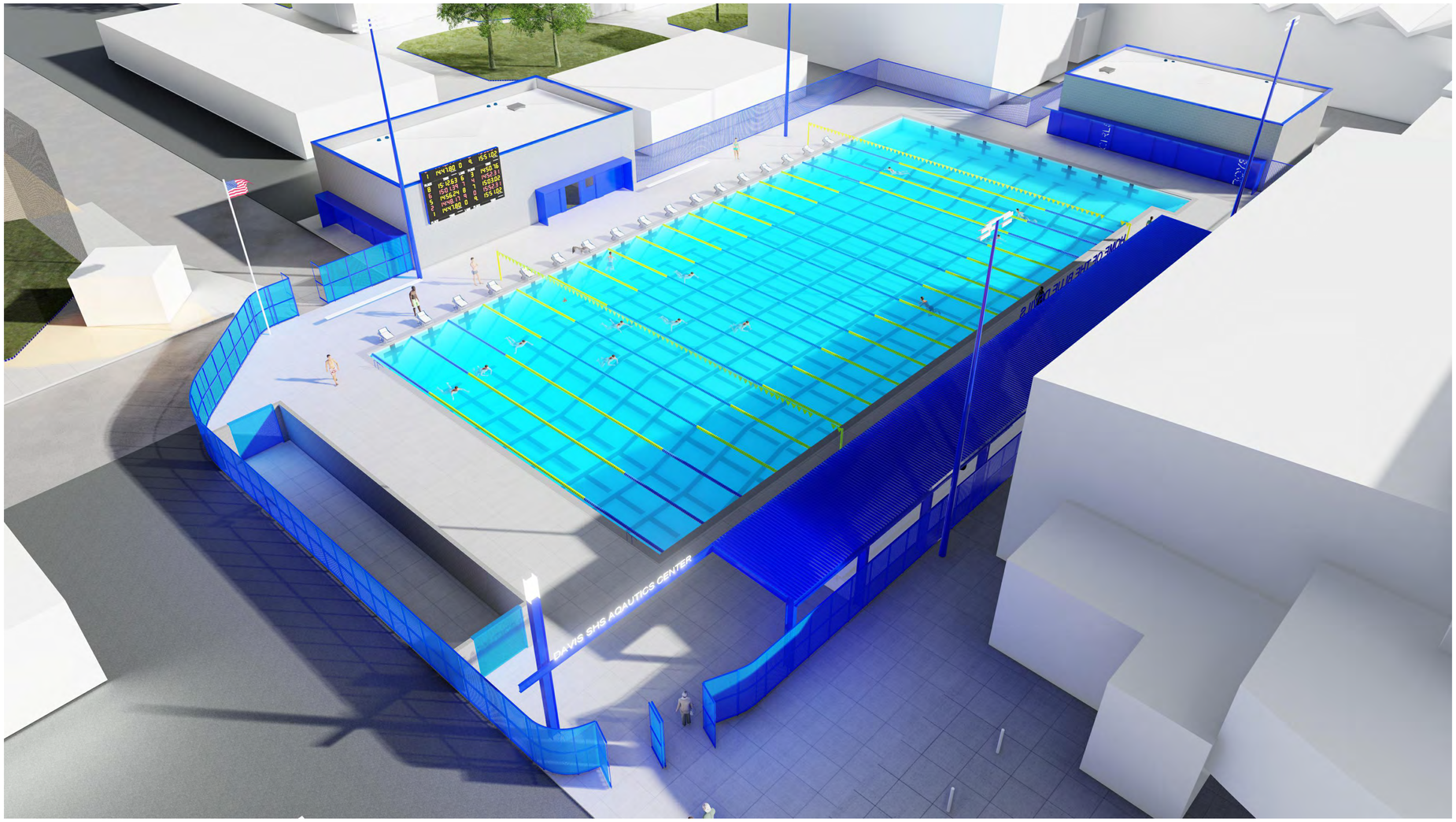

Submittals	Date
50% DD REVIEW	06/15/2021
100% DD SUBMITTAL	07/26/2021
50% CD REVIEW	10/08/2021
100% CD DSA SUBMITTAL	10/22/2021
DSA SUBMITTAL	03/24/2022

LPA
ARCHITECTURE ENGINEERING INTERIORS
LANDSCAPE ARCHITECTURE PLANNING

916-287-2400 Office
916-287-2401 Fax
LPADesignStudios.com
431 I Street,
Suite 107
Sacramento, California 95814

LICENSED ARCHITECT
JOHNG W. LIU
C-33172
REN 05-31-22
STATE OF CALIFORNIA

DAVIS SR HIGH SCHOOL
AQUATICS CENTER
315 W 14TH ST., DAVIS, CA 95616

Developed for
DAVIS JOINT UNIFIED SCHOOL DISTRICT

PROJECT NUMBER 1904413

COVER SHEET

G0.00

SHEET INDEX

ISSUE DATE	SHEET NUMBER	SHEET NAME
GENERAL		
10/22/2021	G0.00	COVER SHEET
03/24/2022	G0.10	SHEET INDEX
03/24/2022	G0.11	GENERAL INFORMATION
03/24/2022	G0.12	CALGREEN
03/24/2022	G0.21	OVERALL SITE PLAN
03/24/2022	G0.22	FIRE ACCESS SITE PLAN
03/24/2022	G0.23	CONSTRUCTION STAGING SITE PLAN
03/24/2022	G0.31	CODE ANALYSIS SITE PLAN
03/24/2022	G0.32	CODE ANALYSIS FLOOR PLAN
03/24/2022	G0.81	ACCESSIBILITY DETAILS
03/24/2022	G0.82	ACCESSIBILITY DETAILS
CIVIL *		
03/24/2022	C0.01	CIVIL NOTES
03/24/2022	C0.02	KEY PLAN
03/24/2022	C0.03	EXISTING CONDITIONS PLAN
03/24/2022	C0.04	EXISTING CONDITIONS PLAN
03/24/2022	C0.05	EXISTING CONDITIONS PLAN
03/24/2022	C0.06	EXISTING CONDITIONS PLAN
03/24/2022	C1.01	DEMOLITION PLAN
03/24/2022	C1.02	DEMOLITION PLAN
03/24/2022	C1.03	DEMOLITION PLAN
03/24/2022	C1.04	DEMOLITION PLAN
03/24/2022	C2.01	GRADING PLAN
03/24/2022	C2.02	GRADING PLAN
03/24/2022	C2.03	GRADING PLAN
03/24/2022	C2.04	GRADING PLAN
03/24/2022	C3.01	STORM DRAIN PLAN
03/24/2022	C3.02	STORM DRAIN PLAN
03/24/2022	C3.03	STORM DRAIN PLAN
03/24/2022	C4.01	UTILITY PLAN
03/24/2022	C4.02	UTILITY PLAN
03/24/2022	C4.03	UTILITY PLAN
03/24/2022	C5.01	HORIZONTAL CONTROL, PAVING, STRIPING AND SIGNAGE PLAN
03/24/2022	C5.02	HORIZONTAL CONTROL, PAVING, STRIPING AND SIGNAGE PLAN
03/24/2022	C5.03	HORIZONTAL CONTROL, PAVING, STRIPING AND SIGNAGE PLAN
03/24/2022	C5.04	HORIZONTAL CONTROL, PAVING, STRIPING AND SIGNAGE PLAN
03/24/2022	C6.01	EROSION CONTROL PLAN
03/24/2022	C6.02	EROSION CONTROL PLAN
03/24/2022	C6.03	EROSION CONTROL PLAN
03/24/2022	C6.04	EROSION CONTROL PLAN
03/24/2022	C7.01	CIVIL DETAILS
03/24/2022	C7.02	CIVIL DETAILS
03/24/2022	C7.03	CIVIL DETAILS
LANDSCAPE*		
03/24/2022	L0.01	LANDSCAPE NOTES AND SCHEDULES
03/24/2022	L0.02	OVERALL SITE PLAN
03/24/2022	L1.01	MATERIALS PLAN
03/24/2022	L1.02	MATERIALS PLAN
03/24/2022	L1.03	MATERIALS PLAN
03/24/2022	L1.04	MATERIALS PLAN
03/24/2022	L2.01	LAYOUT PLAN
03/24/2022	L2.02	LAYOUT PLAN
03/24/2022	L2.03	LAYOUT PLAN
03/24/2022	L2.04	LAYOUT PLAN
03/24/2022	L4.01	SECTIONS AND ELEVATIONS
03/24/2022	L4.02	SECTIONS AND ELEVATIONS
03/24/2022	L4.03	SECTIONS AND ELEVATIONS
03/24/2022	L4.04	SECTIONS AND ELEVATIONS
03/24/2022	L5.01	CONSTRUCTION DETAILS
03/24/2022	L5.02	CONSTRUCTION DETAILS
03/24/2022	L5.03	CONSTRUCTION DETAILS
03/24/2022	L5.04	CONSTRUCTION DETAILS
03/24/2022	L5.05	CONSTRUCTION DETAILS
03/24/2022	L7.01	PLANTING PLAN
03/24/2022	L7.02	PLANTING DETAILS
ARCHITECTURE		
03/24/2022	A1.01	ARCHITECTURAL SITE PLAN
03/24/2022	A2.01	SLAB PLAN - POOL MECHANICAL BUILDING
03/24/2022	A2.02	SLAB PLAN - POOL RESTROOM BUILDING
03/24/2022	A2.11	FLOOR PLAN - POOL MECHANICAL BUILDING
03/24/2022	A2.12	FLOOR PLAN - POOL RESTROOM BUILDING
03/24/2022	A2.13	FLOOR PLAN - METAL SHADE STRUCTURE
03/24/2022	A2.31	ROOF PLAN - POOL MECHANICAL BUILDING
03/24/2022	A2.32	ROOF PLAN - POOL RESTROOM BUILDING
03/24/2022	A2.33	ROOF PLAN - METAL SHADE STRUCTURE
03/24/2022	A2.41	REFLECTED CEILING PLAN - POOL MECHANICAL BUILDING
03/24/2022	A2.42	REFLECTED CEILING PLAN - POOL RESTROOM BUILDING
03/24/2022	A2.43	REFLECTED CEILING PLAN - METAL SHADE STRUCTURE
03/24/2022	A3.01	EXTERIOR ELEVATIONS - POOL MECHANICAL BUILDING
03/24/2022	A3.02	EXTERIOR ELEVATIONS - POOL RESTROOM BUILDING
03/24/2022	A3.03	EXTERIOR ELEVATIONS - METAL SHADE STRUCTURE
03/24/2022	A3.04	ENLARGED EXTERIOR ELEVATIONS
03/24/2022	A3.11	BUILDING SECTIONS - POOL MECHANICAL BUILDING
03/24/2022	A3.12	BUILDING SECTIONS - POOL RESTROOM BUILDING
03/24/2022	A3.13	BUILDING SECTIONS - METAL SHADE STRUCTURE
03/24/2022	A3.21	WALL SECTIONS
03/24/2022	A3.22	METAL SHADE STRUCTURE SECTIONS & DETAILS
03/24/2022	A4.01	ENLARGED FLOOR PLANS
03/24/2022	A4.02	ENLARGED FLOOR PLANS
03/24/2022	A4.03	ENLARGED FLOOR PLANS
03/24/2022	A4.04	ENLARGED FLOOR PLANS
03/24/2022	A4.05	ENLARGED FLOOR PLANS
03/24/2022	A6.01	SCHEDULES & OPENING TYPES
03/24/2022	A8.01	EXTERIOR DETAILS
03/24/2022	A8.21	ROOF DETAILS
03/24/2022	A8.22	ROOF DETAILS
03/24/2022	A8.51	OPENING DETAILS
03/24/2022	A8.71	MISC. DETAILS
03/24/2022	A9.01	WALL TYPES
03/24/2022	A9.11	INTERIOR DETAILS
03/24/2022	A9.21	INTERIOR CEILING DETAILS
03/24/2022	A9.22	INTERIOR CEILING DETAILS
03/24/2022	A10.01	SIGNAGE PLAN - POOL MECHANICAL BUILDING
03/24/2022	A10.02	SIGNAGE PLAN - POOL RESTROOM BUILDING
03/24/2022	A9.41	RESTROOM DETAILS
03/24/2022	A9.71	MISC. DETAILS
03/24/2022	A10.11	SIGNAGE DETAILS
03/24/2022	A10.12	SIGNAGE DETAILS
STRUCTURAL *		
10/22/21	S0.01	GENERAL NOTES
10/22/21	S1.01	TYPICAL SITE DETAILS
10/22/21	S2.11	PLANS - POOL MECHANICAL BUILDING
10/22/21	S2.12	PLANS - POOL RESTROOM BUILDING
10/22/21	S2.13	PLANS - CANOPY
10/22/21	S3.01	ELEVATIONS - POOL MECHANICAL BUILDING
10/22/21	S3.02	ELEVATIONS - POOL RESTROOM BUILDING
03/22/22	S3.03	ELEVATIONS - NON-BEARING CMU WALL - POOL MECHANICAL BUILDING
03/22/22	S3.04	ELEVATIONS - NON-BEARING CMU WALL - POOL RESTROOM BUILDING
10/22/21	S6.01	TYPICAL FOUNDATION AND SOG DETAILS
10/22/21	S6.02	TYPICAL FOUNDATION AND SOG DETAILS
10/22/21	S6.11	TYPICAL STRUCTURAL STEEL DETAILS
10/22/21	S6.12	TYPICAL METAL DECKING DETAILS
10/22/21	S6.13	TYPICAL DECK SUPPORTING DETAILS
10/22/21	S6.15	TYPICAL STRUCTURAL STEEL DETAILS
10/22/21	S6.16	TYPICAL STRUCTURAL STEEL DETAILS
10/22/21	S6.61	TYP. CMU WALL ELEVATION and DETAILS
10/22/21	S6.62	TYPICAL CMU WALL DETAILS
10/22/21	S6.63	TYPICAL CMU WALL DETAILS
10/22/21	S6.71	TYPICAL LIGHT GAUGE FRAMING SCHEDULES and ELEVATIONS
10/22/21	S6.72	TYPICAL LIGHT GAUGE METAL FRAMING DETAILS
10/22/21	S6.73	TYPICAL LIGHT GAUGE METAL FRAMING DETAILS
10/22/21	S6.74	TYPICAL LIGHT GAUGE METAL FRAMING DETAILS

SHEET INDEX

ISSUE DATE	SHEET NUMBER	SHEET NAME
10/22/21	S6.91	TYP. EQUIPMENT ANCHORAGE DETAILS
10/22/21	S6.92	TYP. EQUIPMENT ANCHORAGE DETAILS
MECHANICAL *		
03/24/2022	M0.10	MECHANICAL LEGENDS AND GENERAL NOTES
03/24/2022	M0.20	MECHANICAL SCHEDULES
03/24/2022	M0.30	MECHANICAL TITLE-24 FORMS
03/24/2022	M2.11	MECHANICAL - POOL MECHANICAL BUILDING FLOOR PLAN
03/24/2022	M2.12	MECHANICAL - POOL RESTROOM BUILDING FLOOR PLAN
03/24/2022	M2.31	MECHANICAL - POOL MECHANICAL BUILDING ROOF PLAN
03/24/2022	M2.32	MECHANICAL - POOL RESTROOM BUILDING ROOF PLAN
03/24/2022	M3.11	PIPING & CONTROLS - POOL MECHANICAL BUILDING FLOOR PLAN
03/24/2022	M3.12	PIPING & CONTROLS - POOL RESTROOM BUILDING FLOOR PLAN
03/24/2022	M3.31	PIPING & CONTROLS - POOL MECHANICAL BUILDING ROOF PLAN
03/24/2022	M3.32	PIPING & CONTROLS - POOL RESTROOM BUILDING ROOF PLAN
03/24/2022	M6.10	MECHANICAL CONTROL SEQUENCES AND DIAGRAMS
03/24/2022	M7.10	MECHANICAL DETAILS AND DIAGRAMS
03/24/2022	M7.20	MECHANICAL DETAILS AND DIAGRAMS
PLUMBING *		
03/24/2022	P0.10	PLUMBING LEGENDS AND GENERAL NOTES
03/24/2022	P0.20	PLUMBING SCHEDULES
03/24/2022	P1.01	PLUMBING SITE PLAN
03/24/2022	P2.11	PLUMBING - POOL MECHANICAL BUILDING DRAINAGE PLAN
03/24/2022	P2.12	PLUMBING - POOL MECHANICAL BUILDING WATER PLAN
03/24/2022	P2.13	PLUMBING - POOL RESTROOM BUILDING DRAINAGE PLAN
03/24/2022	P2.14	PLUMBING - POOL RESTROOM BUILDING WATER PLAN
03/24/2022	P2.15	PLUMBING - CANOPY FLOOR PLAN
03/24/2022	P2.31	PLUMBING - POOL MECHANICAL BUILDING ROOF PLAN
03/24/2022	P2.32	PLUMBING - POOL RESTROOM BUILDING ROOF PLAN
03/24/2022	P2.33	PLUMBING - CANOPY ROOF PLAN
03/24/2022	P6.10	PLUMBING DETAILS
FIRE SPRINKLER *		
03/24/22	FP0.00	FIRE SPRINKLER LEGEND, NOTES, AND SCHEDULES
03/24/22	FP1.00	FIRE SPRINKLER SITE PLAN
03/24/22	FP2.10	FIRE SPRINKLER PIPING PLAN AND SECTIONS
03/24/22	FP4.11	FIRE SPRINKLER SEISMIC CALCULATIONS
03/24/22	FP9.00	FIRE SPRINKLER DETAILS
ELECTRICAL*		
03/24/2022	E0.01	ELECTRICAL LEAD SHEET
03/24/2022	E0.02	ELECTRICAL LEAD SHEET
03/24/2022	E0.20	LIGHTING FIXTURE NOTES AND LCP SCHEDULES
03/24/2022	E0.21	LIGHTING FIXTURE SCHEDULE
03/24/2022	E1.01	ELECTRICAL SITE PLAN
03/24/2022	E1.11	LIGHTING SITE PLAN
03/24/2022	E2.11	ELECTRICAL POWER - POOL MECHANICAL BUILDING FLOOR PLAN
03/24/2022	E2.12	ELECTRICAL POWER - POOL RESTROOM BUILDING FLOOR PLAN
03/24/2022	E2.13	ELECTRICAL POWER - CANOPY FLOOR PLAN
03/24/2022	E2.21	ELECTRICAL POWER/MECH - POOL MECHANICAL BUILDING FLOOR PLAN
03/24/2022	E2.22	ELECTRICAL POWER/MECH - POOL MECHANICAL BLDG. ROOF PLAN
03/24/2022	E2.23	ELECTRICAL POWER/MECH - POOL RESTROOM BUILDING FLOOR PLAN
03/24/2022	E2.24	ELECTRICAL POWER/MECH - POOL RESTROOM BUILDING ROOF PLAN
03/24/2022	E3.11	LIGHTING - POOL MECHANICAL BUILDING RCP
03/24/2022	E3.12	LIGHTING - POOL RESTROOM BUILDING RCP
03/24/2022	E3.13	LIGHTING - CANOPY RCP
03/24/2022	E4.01	ENLARGED ELECTRICAL PLAN
03/24/2022	E5.01	SINGLE LINE DIAGRAM AND LOAD FEEDER SCHEDULE
03/24/2022	E5.02	PANEL SCHEDULES
03/24/2022	E6.01	LIGHTING CONTROL DIAGRAMS AND DETAILS
03/24/2022	E7.01	ELECTRICAL DETAILS
03/24/2022	E7.02	ELECTRICAL DETAILS
03/24/2022	E7.03	ELECTRICAL DETAILS
03/24/2022	E7.04	LIGHTING DETAILS
03/24/2022	E8.01	ENERGY COMPLIANCE FORMS
03/24/2022	E8.02	ENERGY COMPLIANCE FORMS
03/24/2022	E8.03	ENERGY COMPLIANCE FORMS
03/24/2022	E8.04	ENERGY COMPLIANCE FORMS
03/24/2022	E8.05	ENERGY COMPLIANCE FORMS
03/24/2022	E9.11	ELECTRICAL SITE PHOTOMETRIC PLAN
FIRE ALARM *		
03/24/2022	FA0.01	FIRE ALARM LEAD SHEET
03/24/2022	FA1.01	FIRE ALARM SITE PLAN
03/24/2022	FA2.11	FIRE ALARM - POOL MECHANICAL & RESTROOM BUILDING RCP
03/24/2022	FA4.00	FIRE ALARM DIAGRAMS AND DETAILS
03/24/2022	FA5.00	FIRE ALARM RISER DIAGRAMS
03/24/2022	FA6.00	BATTERY AND VOLTAGE DROP CALCULATIONS
TECHNOLOGY*		
03/24/22	T0.00	TECHNOLOGY ABBREVIATIONS, NOTES, AND SCHEDULES
03/24/22	T0.01	TECHNOLOGY SYMBOL LEGEND
03/24/22	T1.00	TECHNOLOGY SITE PLAN
03/24/22	T2.10	TECHNOLOGY FLOOR PLAN
03/24/22	T2.11	TECHNOLOGY ENLARGED FLOOR PLAN
03/24/22	T7.00	TECHNOLOGY RISER DIAGRAM
03/24/22	T9.00	TECHNOLOGY DETAILS
03/24/22	T9.01	TECHNOLOGY DETAILS
03/24/22	T9.02	TECHNOLOGY AV RISER DIAGRAM
SWIMMIMG POOL *		
03/24/2022	AQ1.0	SWIMMING POOL DECK PLAN
03/24/2022	AQ1.1	SWIMMING POOL LAYOUT PLAN (SWIMMING)
03/24/2022	AQ1.2	SWIMMING POOL LAYOUT PLAN (WATER POLO)
03/24/2022	AQ1.3	SWIMMING POOL SECTIONS
03/24/2022	AQ1.4	SWIMMING POOL PIPING PLAN
03/24/2022	AQ1.5	SWMMING POOL UNDERWATER LIGHT/ TIMING SYSTEM PLAN
03/24/2022	AQ1.6	DETAILS
03/24/2022	AQ1.7	DETAILS
03/24/2022	AQ1.8	DETAILS
03/24/2022	AQ1.9	DETAILS
03/24/2022	AQ1.10	DETAILS
03/24/2022	AQ1.11	DETAILS
03/24/2022	AQ1.12	DETAILS
03/24/2022	AQ2.1	MECHANICAL ROOM LAYOUT PLAN
03/24/2022	AQ2.2	MECHANICAL ROOM SECTIONS
03/24/2022	AQ2.3	DETAILS
03/24/2022	AQ2.4	DETAILS
03/24/2022	AQ2.5	DETAILS
03/24/2022	AQ2.6	DETAILS
03/24/2022	AQ2.7	DETAILS
03/24/2022	AQ2.8	DETAILS
03/24/2022	AQ2.9	DETAILS
03/24/2022	AQ2.10	DETAILS
03/24/2022	AQ2.11	DETAILS
SPORT LIGHTING *		
03/24/2022	MT1	NOTES, FOUNDATION DETAIL
03/24/2022	MS1	POLE DETAIL
03/24/2022	MD1	ATTACHMENT DETAILS
03/24/2022	MD2	ATTACHMENT DETAILS
03/24/2022	MD3	ATTACHMENT DETAILS
03/24/2022	MD4	PHOTOMETRICS PLANS
BLEACHER DESIGN *		
03/24/2022	B0.01	BLEACHER COVER SHEET
03/24/2022	B0.02	BLEACHER WCA DETAILS
03/24/2022	B1.01	BLEACHER LAYOUT
03/24/2022	B1.02	BLEACHER LAYOUT
03/24/2022	B2.01	BLEACHER DETAILS
03/24/2022	B2.02	BLEACHER DETAILS
Grand total: 242		

IDENTIFICATION STAMP
DIV. OF THE STATE ARCHITECT
APP: 02-119490 INC:
REVIEWED FOR
SS ☑ FLS ☑ ACS ☑
DATE: 09/13/2022

LPA

ARCHITECTURE ENGINEERING INTERIORS
LANDSCAPE ARCHITECTURE PLANNING

916-287-2400 Office
916-287-2401 Fax
LPADesignStudios.com

431 I Street,
Suite 107
Sacramento, California 95814

LICENSED ARCHITECT
YOUNG W MIN
No. C-33172
REN. 05-31-23
STATE OF CALIFORNIA

This document and all other project documents, ideas, aesthetics and designs incorporated therein are instruments of service. All project documents are copyright protected, are the property of LPA, Inc. (LPA) and cannot be lawfully used in whole or in part for any project or purpose except as set forth in the contractual agreement between LPA and its Client. The unauthorized disclosure and/or use of the project documents (including the creation of derivative works), may give rise to liability for copyright infringement, unlawful disclosure, use or misappropriation of property rights held by LPA. The unauthorized use of the project documents will give rise to the recovery of monetary losses and damages including attorney fees and costs for which the unauthorized user will be held liable.
Project documents describe the design intent of the work and are not a representation of as-built or existing conditions. LPA is not responsible for any discrepancies between the project documents and the existing conditions.

© LPA, Inc.

DAVIS SR HIGH SCHOOL
AQUATICS CENTER
315 W 14TH ST., DAVIS, CA 95616

Developed for
DAVIS JOINT UNIFIED SCHOOL DISTRICT

Revision	Date

Submittal	Date
50% DD REVIEW	06/15/2021
100% DD SUBMITTAL	07/26/2021
50% CD REVIEW	10/08/2021
100% CD DSA SUBMITTAL	10/22/2021
DSA SUBMITTAL	03/24/2022

Job Number	1904413
Date Published	03/24/2022
Checked By	Checker
Scale	

SHEET INDEX

G0.10

SYMBOLS LEGEND

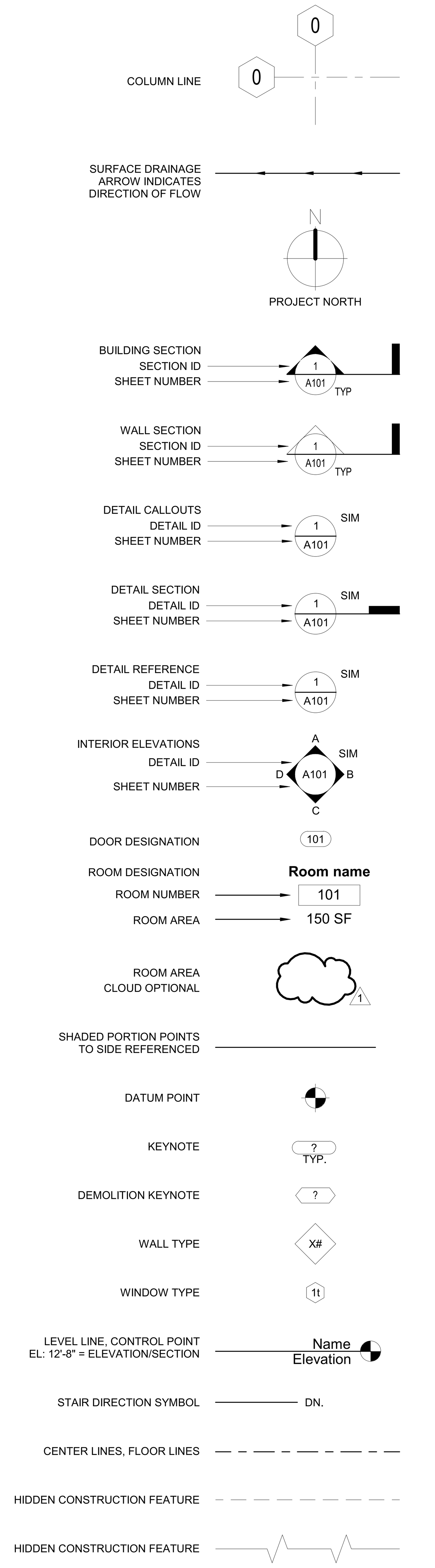

ABBREVIATIONS

&	AND
∠	ANGLE
@	AT
℄	CENTERLINE
∅	DIAMETER OR ROUND
#	POUND OR NUMBER
(E)	EXISTING
(P)	PAINT
(R)	REMOVE
ACOUS	ACOUSTICAL
AC	ASPHALTIC CONCRETE
AD	AREA DRAIN
ADJ	ADJUSTABLE
AFF	ABOVE FINISH FLOOR
AGGR	AGGREGATE
ALUM	ALUMINUM
APPROX	APPROXIMATE
ARCH	ARCHITECTURAL
ASPH	ASPHALT
BD	BOARD
BITUM	BITUMINOUS
BLDG	BUILDING
BLK	BLOCK
BLK'G	BLOCKING
BM	BEAM
BOC	BACK OF CURB
BOT	BOTTOM
BOW	BOTTOM OF WALL or BACK OF WALL
BS	BOTTOM OF SLOPE
CAB	CABINET
CB	CATCH BASIN
CEM	CEMENT
CER	CERAMIC
CI	CAST IRON
CIP	CAST IN PLACE
CIV ENG	CIVIL ENGINEER
CG	CORNER GUARD
CJ	CONTROL JOINT
CLG	CEILING
CLKG	CAULKING
CLO	CLOSET
CLR	CLEAR
CNTR	COUNTER
CO	CASED OPENING
COL	COLUMN
CONC	CONCRETE
CONN	CONNECTION
CONSTR	CONSTRUCTION
CONT	CONTINUOUS
CORR	CORRIDOR
CT	CERAMIC TILE
CTR	CENTER
CTSK	COUNTERSUNK
DA	DISABLED ACCESS
DBL	DOUBLE
DEPT	DEPARTMENT
DESC	DESCRIPTION
DF	DRINKING FOUNTAIN
DET	DETAIL
DIA	DIAMETER
DIM	DIMENSION
DISP	DISPENSER
DN	DOWN
DO	DOOR OPENING
DR	DOOR
DWR	DRAWER
DS	DOWNSPOUT
DSP	DRY STANDPIPE
DWG	DRAWING
E	EAST
EA	EACH
EJ	EXPANSION JOINT
EL	ELEVATION
ELEC	ELECTRICAL
ELEV	ELEVATOR
EMER	EMERGENCY
ENCL	ENCLOSURE
EP	ELECTRICAL PANELBOARD
EQ	EQUAL
EQUIP	EQUIPMENT
EWC	ELECTRIC WATER COOLER
EXIST	EXISTING
EXPO	EXPOSED
EXP	EXPANSION
EXT	EXTERIOR
FA	FIRE ALARM
FB	FLAT BAR
FD	FLOOR DRAIN
FDN	FOUNDATION
FE	FIRE EXTINGUISHER
FEC	FIRE EXTINGUISHER CABINET
FHC	FIRE HOSE CABINET
FIN	FINISH
FLR	FLOOR
FLASH	FLASHING
FLUOR	FLUORESCENT
FOC	FACE OF CONCRETE
FOF	FACE OF FINISH
FOM	FACE OF MASONRY
FOS	FACE OF STUD
FOV	FACE OF VENEER (BRICK OR PRECAST)
FOW	FACE OF WALL
FR	FIRE RETARDANT
FPRF	FIREPROOF
FS	FINISH SURFACE
FT	FOOT OR FEET
FTG	FOOTING
FURR	FURRING
FUT	FUTURE
GA	GAUGE
GALV	GALVANIZED
GB	GRAB BAR
GC	GENERAL CONTRACTOR
GI	GALVANIZED IRON
GL	GLASS
GND	GROUND
GR	GRADE
GYP	GYPSUM
HB	HOSE BIB
HC	HOLLOW CORE
HDWD	HARDWOOD
HDW	HARDWARE
HM	HOLLOW METAL
HORIZ	HORIZONTAL
HR	HOUR
HGT/HT	HEIGHT
ID	INSIDE DIAMETER
INSUL	INSULATION
INT	INTERIOR
JAN	JANITOR
JT	JOINT
KIT	KITCHEN
LAB	LABORATORY
LAM	LAMINATE
LAND ARCH	LANDSCAPE ARCHITECT
LAV	LAVATORY
LKR	LOCKER
LT	LIGHT
MATL	MATERIAL
MAX	MAXIMUM
MC	MEDICINE CABINET
MECH	MECHANICAL
MEMB	MEMBRANE
MET	METAL
MFR	MANUFACTURER
MH	MANHOLE
MIN	MINIMUM
MIR	MIRROR
MISC	MISCELLANEOUS
MO	MASONRY OPENING
MTD	MOUNTED
MUL	MULLION
N	NORTH
NIC	NOT IN CONTRACT
NO/#	NUMBER
NOM	NOMINAL
NTS	NOT TO SCALE
OA	OVERALL
OA	OUTSIDE AIR
OBS	OBSCURE
OC	ON CENTER
OD	OUTSIDE DIAMETER
OFF	OFFICE
OPNG	OPENING
OPP	OPPOSITE
OSA	OUTSIDE AIR
PA	PLANTING AREA
PRCST	PRECAST
PH	PANIC HARDWARE
PL	PLATE
P LAM	PLASTIC LAMINATE
PLAS	PLASTER
PLYWD	PLYWOOD
POT	PATH OF TRAVEL
PR	PAIR
PT	PAINT
PTD	PAPER TOWEL DISPENSER
PTD/R	COMBINATION PAPER TOWEL DISPENSER & RECEPTACLE
PTN	PARTITION
PTR	PAPER TOWEL RECEPTACLE
QT	QUARRY TILE
R	RISER
RAD	RADIUS
RD	ROOF DRAIN
REF	REFERENCE
REFR	REFRIGERATOR
RGTR	REGISTER
REINF	REINFORCED
REQD	REQUIRED
RESIL	RESILIENT
RM	ROOM
RO	ROUGH OPENING
ROW	RIGHT OF WAY
RWD	REDWOOD
RWL	RAIN WATER LEADER
S	SOUTH
SC	SOLID CORE
SCD	SEAT COVER DISPENSER
SCHED	SCHEDULE
SD	SOAP DISPENSER
SECT	SECTION
SF	SQUARE FEET
SH	SHELF
SHR	SHOWER
SHT	SHEET
SIM	SIMILAR
SND	SANITARY NAPKIN DISPENSER
SNR	SANITARY NAPKIN RECEPTACLE
SOW	SCOPE OF WORK
SPEC	SPECIFICATION(S)
SQ	SQUARE
SS	STAINLESS STEEL
S SK	SERVICE SINK
STA	STATION
STD	STANDARD
STL	STEEL
STOR	STORAGE
STR	STRUCTURAL
SUSP	SUSPENDED
SYM	SYMMETRICAL
T	TREAD
TB	TOWEL BAR
TC	TOP OF CURB
TEL	TELEPHONE
TER	TERRAZZO
T&G	TONGUE & GROOVE
THK	THICK
TOB	TOP OF BEAM
TOC	TOP OF CONCRETE
TOW	TOP OF WALL
TOP	TOP OF PARAPET
TOR	TOP OF ROOFING
TPD	TOILET PAPER DISPENSER
TS	TOP OF SLOPE
TV	TELEVISION
TYP	TYPICAL
UNF	UNFINISHED
UNO	UNLESS NOTED OTHERWISE
UR	URINAL
VCT	VINYL COMPOSITION TILE
VERT	VERTICAL
VEST	VESTIBULE
W	WEST
W/	WITH
WC	WATER CLOSET
WD	WOOD
W/O	WITHOUT
WP	WATERPROOF
WR	WATER RESISTANT
WSCT	WAINSCOT
WT	WEIGHT
WWF	WELDED WIRE FABRIC

GENERAL NOTES

1. ALL CONSTRUCTION AND MATERIALS SHALL BE AS SPECIFIED AND IN ACCORDANCE WITH ALL APPLICABLE CODES, ORDINANCES, LAWS, PERMITS, AND THE CONTRACT DOCUMENTS.
2. THE CONTRACTOR SHALL BE RESPONSIBLE FOR THE ACCURATE PLACEMENT OF ALL NEW CONSTRUCTION ON THE SITE.
3. THE CONTRACTOR SHALL VERIFY ALL DIMENSIONS AND SITE CONDITIONS BEFORE STARTING WORK. SHOULD A DISCREPANCY APPEAR IN THE CONTRACT DOCUMENTS, OR BETWEEN THE CONTRACT DOCUMENTS AND EXISTING CONDITIONS, NOTIFY THE ARCHITECT AT ONCE FOR INSTRUCTION ON HOW TO PROCEED.
4. SHOULD A CONFLICT OCCUR IN OR BETWEEN DRAWINGS AND SPECIFICATIONS, THE SPECIFICATIONS SHALL TAKE PRECEDENCE, UNLESS A WRITTEN DECISION FROM THE ARCHITECT HAS BEEN OBTAINED WHICH DESCRIBES A CLARIFICATION OR ALTERNATE METHOD AND/ OR MATERIALS.
5. THE CONTRACTOR SHALL CONFINE HIS OPERATIONS ON THE SITE TO ARES PERMITTED BY THE OWNER.
6. THE JOB SITE SHALL BE MAINTAINED IN A CLEAN, ORDERLY CONDITION FREE OF DEBRIS AND LITTER, AND SHALL NOT BE UNREASONABLY ENCUMBERED WITH ANY MATERIALS OR EQUIPMENT. EACH SUBCONTRACTOR IMMEDIATELY UPON COMPLETION OF EACH PHASE OF HIS WORK SHALL REMOVE ALL TRASH AND DEBRIS AS A RESULT OF HIS OPERATION.
7. ALL MATERIAL STORED ON THE SITE SHALL BE PROPERLY STACKED AND PROTECTED TO PREVENT DAMAGE AND DETERIORATION. FAILURE TO PROTECT MATERIALS MAY BE GROUNDS FOR REJECTION OF WORK.
8. THE CONTRACTOR SHALL DO ALL CUTTING, FITTING, OR PATCHING OF HIS WORK THAT MAY BE REQUIRED TO MAKE ITS SEVERAL PARTS FIT TOGETHER PROPERLY AND SHALL NOT ENDANGER ANY OTHER WORK BY CUTTING, EXCAVATING, OR OTHERWISE ALTERING THE TOTAL WORK OR ANY PART OF IT. ALL PATCHING, REPAIRING, AND REPLACING OF MATERIALS AND SURFACES, CUT OR DAMAGED IN EXECUTION OF WORK, SHALL BE DONE WITH APPLICABLE MATERIALS SO THAT SURFACES REPLACED WILL, UPON COMPLETION, MATCH SURROUNDING SIMILAR SURFACES.
9. NO PORTION OF THE WORK REQUIRING A SHOP DRAWING OR SAMPLE SUBMISSION SHALL BE COMMENCED UNTIL THE SUBMISSION HAS BEEN REVIEWED BY THE ARCHITECT. ALL SUCH PORTIONS OF THE WORK SHALL BE IN ACCORDANCE WITH CORRECTED SHOP DRAWINGS AND SAMPLES.
10. DIMENSIONS:
    A. ALL DIMENSIONS SHALL TAKE PRECEDENCE OVER SCALE.
    B. ALL DIMENSIONS ARE TO THE FRAMING UNLESS OTHERWISE NOTED.
    C. CEILING HEIGHT DIMENSIONS ARE FROM FINISH FLOOR SLAB TO FACE OF FINISH CEILING MATERIAL UNLESS OTHERWISE NOTED.
11. ALL EXIT DOORS SHALL BE OPERABLE FROM THE INSIDE WITHOUT THE USE OF A KEY OR SPECIAL KNOWLEDGE OR EFFORT. EXIT SIGNS SHALL BE PROVIDED AT ALL EXITS AS REQUIRED BY C.B.C., CHAPTER 10. ALL DOOR SWINGS SERVING AN OCCUPANT LOAD OF 50 OR GREATER SHALL SWING IN THE DIRECTION OF TRAVEL.
12. PROVIDE ALL NECESSARY BLOCKING, BACKING, AND FRAMING FOR LIGHT FIXTURES, ELECTRIC UNITS, A.C. EQUIPMENT, RECESSED ITEMS, AND ALL OTHER ITEMS AS REQUIRED.
13. WHERE LARGER STUDS OR FURRING ARE REQUIRED TO COVER PIPING AND CONDUITS, THE LARGER STUD SIZE OR FURRING WALL SHALL EXTEND THE FULL SURFACE OF THE WIDTH AND LENGTH WHERE THE FURRING OCCURS.
14. PROVIDE FIRE EXTINGUISHERS PER THE REQUIREMENTS OF THE 2019 C.F.C. C.B.C. & TITLE 19.
15. PROVIDE ALL ACCESS PANELS AS REQUIRED BY GOVERNING CODES TO ALL CONCEALED SPACES, VOIDS, ATTICS, ETC. VERIFY TYPE REQUIRED WITH ARCHITECT PRIOR TO INSTALLATION.
16. ALL GLASS AND GLAZING SHALL COMPLY WITH C.B.C. CHAPTER 24.
17. CONTRACTOR SHALL COMPLY WITH 2019 C.F.C. CHAPTER DURING ALL PHASES OF PROJECT.
18. ALL WORK SHALL CONFORM TO TITLE 24, CALIFORNIA CODE OF REGULATIONS (CCR).
19. CHANGES MADE TO THE APPROVED DRAWINGS SHALL BE MADE BY ADDENDA OF DSA CCDA. CCDA SHALL BE SUBMITTED TO DSA IF THEY AFFECT FIRE LIFE SAFETY, STRUCTURAL OR ACCESS ITEMS. REFERENCE DSA IR A-6.
20. A PROJECT INSPECTOR EMPLOYED BY THE DISTRICT(OWNER) AND APPROVED BY THE OFFICE OF THE STATE ARCHITECT SHALL PROVIDE CONTINUOUS INSPECTION OF THE WORK. THE DUTIES OF THE INSPECTOR ARE DEFINED IN SECTION 4-342, CALIFORNIA BUILDING STANDARDS ADMINISTRATIVE CODE (PART1, TITLE 24, CCR). REFER TO DSA NOTES, THIS SHEET.
21. AL NEW PIPING ALONG WALLS SHALL BE HIDDEN. GENERAL CONTRACTOR SHALL MAKE ALL THE NECESSARY WORK TO DEMO OUT EXISTING WALL TO RECEIVE THE NEW PIPING TO CONNECT TO THE PLUMBING FIXTURES. GENERAL CONTRACTOR SHALL PATCH ALL WALLS TO MATCH WITH ADJACENT EXISTING WALL.
22. CONTRACTOR SHALL BE RESPONSIBLE FOR ALL PHASED CONSTRUCTION, THIS INCLUDES ALL PARTIAL DEMO, INSTALL AND COORDINATION OF SYSTEMS THAT MAY HAVE TO BE PARTIALLY BUILT WHILE RUNNING IN CONJUNCTION W/ EXISTING SYSTEMS. LIQUIDATED DAMAGES WILL APPLY FOR ANY DELAYS CAUSED BY THE CONTRACTOR.
23. EFFECTIVE JULY 1, 2011 NEW BUILDING SERVING K-12, CONSTRUCTED WITH STATE FUNDS, ON NEW OR EXISTING CAMPUSES WITH INDIVIDUAL ROOMS WITH AN OCCUPANT LOAD OF 5 OR MORE AND BUILDING ENTRANCES SHALL BE QUIPPED WITH INTERIOR LOCKING DOOR HARDWARE PER AB 211 (EXCEPT PUPIL RESTROOMS). THIS REQUIREMENT APPLIES REGARDLESS OF OCCUPANCY CLASSIFICATION (ADMIN., PRESS BOXES, ETC.), AND IS APPLICABLE TO "LEASE-BACK" PROJECTS. PROVIDE A COPY OF THE MANUFACTURER'S CUT SHEETS AND HARDWARE LISTING FOR REVIEW. (REF: 17075.50 (A) (B), CAL. ED. CODE)
24. FOOD HANDLING FACILITIES SHALL COMPLY WITH ALL LOCAL HEALTH REQUIREMENTS AND CALIFORNIA UNIFORM RETAIL FOOD FACILITIES LAWS.
25. GRADING PLANS, DRAINAGE IMPROVEMENTS, ROAD AND ACCESS REQUIREMENTS AND ENVIRONMENTAL HEALTH CONSIDERATIONS SHALL COMPLY WITH ALL LOCAL ORDINANCES.
26. THE CALIFORNIA ENERGY CODE SECTION 10-103 REQUIRES ACCEPTANCE TESTING ON ALL NEWLY INSTALLED LIGHTING CONTROLS, MECHANICAL SYSTEMS, ENVELOPES, AND PROCESS EQUIPMENT AFTER INSTALLATION AND BEFORE PROJECT COMPLETION. AN ACCEPTANCE TEST IS A FUNCTIONAL PERFORMANCE TEST TO HELP ENSURE THAT NEWLY INSTALLED EQUIPMENT IS OPERATING AND IN COMPLIANCE WITH THE ENERGY CODE.
27. LIGHTING CONTROLS ACCEPTANCE TESTS MUST BE PERFORMED BY A CERTIFIED LIGHTING CONTROL ACCEPTANCE TEST TECHNICIAN (ATT).
28. MECHANICAL SYSTEMS ACCEPTANCE TESTS MUST BE PERFORMED BY A CERTIFIED MECHANICAL ATT FOR PROJECTS SUBMITTED ON OR AFTER OCTOBER 1, 2021.
29. A LIST OF VERIFIED ATT CAN BE FOUND AT https://www.energy.ca.gov/programs-and-topics/programs/acceptance-test-technician-certification-provider-program/acceptance
30. THE ACCEPTANCE TESTING PROCEDURES MUST BE REPEATED, AND DEFICIENCIES MUST BE CORRECTED BY THE BUILDER OR INSTALLING CONTRACTOR UNTIL THE CONSTRUCTION/ INSTALLATION OF THE SPECIFIED SYSTEMS CONFORM AND PASS THE REQUIRED ACCEPTANCE CRITERIA.
31. PROJECT INSPECTORS WILL COLLECT THE FORMS TO CONFIRM THAT THE REQUIRED ACCEPTANCE TESTS HAVE BEEN COMPLETED.

HAZARDOUS MATERAIL DISCLAIMER

THESE DOCUMENTS HAVE BEEN PREPARED BASED ON INFORMATION PROVIDED BY OTHERS AND ARE A REPRESENTATION OF EXISTING CONDITIONS AT A DETAIL REQUIRED BY THE SCOPE OF THE ARCHITECT'S SERVICES. THE ARCHITECT HAS NOT VERIFIED THE ACCURACY OF THIS INFORMATION INCLUDING BORING OR CORING OF STRUCTURAL AND/ OR NON-STRUCTURAL ELEMENTS, MEASUREMENTS, ETC. AND SHALL NOT BE RESPONSIBLE FOR ANY ERRORS OR OMISSIONS WHICH MAY BE INCORPORATED HEREIN AS A RESULT. THE ARCHITECT HAS NOT CONDUCTED ANY CODE COMPLIANCE ANALYSIS. STRUCTURAL ANALYSIS, ASBESTOS INVESTIGATION, LIFE SAFETY EVALUATION ENGINEERING STUDIES OF ANY KIND TO DETERMINE THE SUITABILITY OF THIS BUILDING FOR ITS INTENDED USE. SUBSEQUENTLY THE ARCHITECT DOES NOT REPRESENT THAT THESE DOCUMENTS ILLUSTRATE EXISTING CONDITIONS THAT COMPLY WITH ANY OR ALL APPLICABLE CODES. THE DISCOVERY OF ANY DEFICIENCY IN THE BUILDING AND/ OR CONSULTANTS IN THE APPROPRIATE MANNER.

PROJECT SCOPE

BUILDING:

TWO NEW ONE STORY BUILDINGS HOUSING POOL MECHANICAL, STORAGE, OFFICE, SCORE BOARD, AND RESTROOM AREAS. THESE TWO NEW BUILDINGS WILL BE LOCATED ON AN EXISTING PARCEL INSIDE THE DAVIS SENIOR HIGHSCHOOL CAMPUS. MINOR BUILDING ALTERNATION IN BUILDING F EXISTING IDF CLOSET TO PROVIDE FIBER CABLE FOR NEW IDF CLOSET IN NEW POOL MECHANICAL BUILDING.

SITE:

INSTALLATION OF ONE NEW POOL, BLEACHERS WITH CANOPY AND EVENT POLES WITH LIGHTING.

ADDITIVE ALTERNATE #1:
SPORT LIGHT FIXTURES (MUSCO LIGHTS), ELECTRICAL WIRING & CONTROLS FROM SITE LOCATION TO BUILDING. FOUNDATION AND CONDUITS ARE INCLUDED IN BASE BID

EXISTING BUILDING ALTERATION:

MINOR BUILDING ALTERATION IN BUILDING "F", PROVIDING FIBER OPTIC CABLE FROM EXISTING IDF CLOSET TO NEW IDF CLOSET IN NEW POOL MECHANICAL BUILDING.
MINOR BUILDING ALTERATION IN BUILDING "A", "H", AND "M", PROVIDING NEW FIBRE OPTIC CABLE FOR NEW FIRE ALARM SYSTEM.

DSA NOTES

1. ALL WORK SHALL CONFORM TO THE **2019 EDITION TITLE 24**, CALIFORNIA CODE OF REGULATIONS (CCR).
2. CHANGES TO THE APPROVED DRAWINGS AND SPECIFICATIONS SHALL BE MADE BY SUBMITTING ADDENDA OR CONSTRUCTION CHANGE DOCUMENTS AND OBTAINING APPROVALS FROM THE DIVISION OF THE STATE ARCHITECT, AS REQUIRED BY SECTION 4-338, PART 1, TITLE 24, CCR.
3. A 'DSA CERTIFIED' PROJECT INSPECTOR EMPLOYED BY THE DISTRICT (OWNER) AND APPROVED BY THE DIVISION OF THE STATE ARCHITECT SHALL PROVIDE CONTINUOUS INSPECTION OF THE WORK. THE DUTIES OF THE INSPECTOR ARE DEFINED IN SECTION 4-342, CALIFORNIA BLDG. STANDARDS ADMINISTRATIVE CODE (PART 1, TITLE 24, CCR).
4. A 'DSA CERTIFIED' INSPECTOR WITH CLASS 1 CERTIFICATION EMPLOYED BY THE DISTRICT (OWNER) AND APPROVED BY THE DSA SHALL PROVIDE CONTINUOUS INSPECTION OF THE WORK. THE DUTIES OF THE INSPECTOR ARE DEFINED IN SECTION 4-342, PART 1, TITLE 24, CCR.
5. THE INTENT OF THESE DRAWINGS AND SPECIFICATIONS IS THAT THE WORK OF THE ALTERATION, REHABILITATIONS OR RECONSTRUCTION IS TO BE IN ACCORDANCE WITH TITLE 24, CCR. SHOULD ANY EXISTING CONDITIONS SUCH AS DETERIORATION OR NON-COMPLYING CONSTRUCTION BE DISCOVERED WHICH IS NOT COVERED BY THE CONTRACT DOCUMENTS WHEREIN THE FINISHED WORK WILL NOT COMPLY WITH TITLE 24, CCR, A CHANGE ORDER, OR A SEPARATE SET OF PLANS AND SPECIFICATIONS, DETAILING AND SPECIFYING THE REQUIRED WORK SHALL BE SUBMITTED TO AND APPROVED BY THE DIVISION OF THE STATE ARCHITECT BEFORE PROCEEDING WITH THE WORK. {(REFERENCE SECTION 4-317 (C), CALIFORNIA BUILDING STANDARDS ADMINISTRATIVE CODE (PART 1, TITLE 24, CCR)}
6. GRADING PLANS, DRAINAGE IMPROVEMENTS, ROAD AND ACCESS REQUIREMENTS AND ENVIRONMENTAL HEALTH CONSIDERATIONS SHALL COMPLY WITH ALL ORDINANCES.
7. A DSA ACCEPTED TESTING LABORATORY DIRECTLY EMPLOYED BY THE DISTRICT (OWNER) SHALL CONDUCT ALL THE REQUIRED TESTS AND INSPECTIONS FOR THE PROJECT.
8. FABRICATION AND INSTALLATION OF DEFERRED SUBMITTAL ITEMS SHALL NOT BE STARTED UNTIL CONTRACTOR'S DRAWINGS, SPECIFICATIONS, AND ENGINEERING CALCULATIONS FOR THE ACTUAL SYSTEMS TO BE INSTALLED HAVE BEEN ACCEPTED AND SIGNED BY THE ARCHITECT OR STRUCTURAL ENGINEER AND APPROVED BY THE DSA. LIST DEFERRED SUBMITTAL ITEMS FOR THIS PROJECT.
9. DSA DOES NOT REVIEW FOR COMPLIANCE WITH C.C.R. TITLE 8, DIVISION 1, CHAPTER 4, SUB-CHAPTER 6, ELEVATOR SAFETY ORDERS (ESO). IT IS THE RESPONSIBILITY OF THE PROJECT ARCHITECT AND ELEVATOR MANUFACTURER TO ENSURE THAT DESIGNS AND ELEVATOR INSTALLATIONS ARE IN CONFORMANCE WITH THE REQUIREMENTS OF THE ELEVATOR SAFETY ORDERS AS ADOPTED.

APPLICABLE CODES

2022 CALIFORNIA BUILDING STANDARDS ADMINISTRATIVE CODE, TITLE 24 C.C.R., PART 1

2019 CALIFORNIA BUILDING CODE (CBC), TITLE 24 C.C.R., PART 2
(2018 INTERNATIONAL BUILDING CODE OF THE INTERNATIONAL CODE COUNCIL, WITH CALIFORNIA AMENDMENTS)

2019 CALIFORNIA ELECTRICAL CODE (CEC), TITLE 24 C.C.R., PART 3
(2017 NATIONAL ELECTRICAL CODE OF THE NATIONAL FIRE PROTECTION ASSOCIATION, NFPA, WITH CALIFORNIA AMENDMENTS)

2019 CALIFORNIA MECHANICAL CODE (CMC), TITLE 24 C.C.R., PART 4
(2018 UNIFORM MECHANICAL CODE OF THE INTERNATIONAL ASSOCIATION OF PLUMBING AND MECHANICAL OFFICIALS, IAPMO, WITH CALIFORNIA AMENDMENTS)

2019 CALIFORNIA PLUMBING CODE (CPC), TITLE 24 C.C.R., PART 5
(2018 UNIFORM PLUMBING CODE OF THE INTERNATIONAL ASSOCIATION OF PLUMBING AND MECHANICAL OFFICIALS, IAPMO, WITH CALIFORNIA AMENDMENTS)

2019 CALIFORNIA ENERGY CODE, TITLE 24 C.C.R., PART 6

2019 CALIFORNIA FIRE CODE (CFC), TITLE 24 C.C.R., PART 9
(2018 INTERNATIONAL FIRE CODE OF THE INTERNATIONAL CODE COUNCIL)

2019 CALIFORNIA EXISTING BUILDING CODE (CEBC), TITLE 24 C.C.R., PART 10
(2018 INTERNATIONAL EXISTING BUILDING CODE OF THE INTERNATIONAL CODE COUNCIL, WITH CALIFORNIA AMENDMENTS)

2019 CALIFORNIA GREEN BUILDING STANDARDS, TITLE 24 C.C.R., PART 11

2019 CALIFORNIA REFERENCED STANDARDS, TITLE 24 C.C.R., PART 12

TITLE 19 C.C.R. PUBLIC SAFETY, STATE FIRE MARSHAL REGULATIONS

2019 CALIFORNIA BUILDING CODE (CBC), TITLE 24 C.C.R., PART 2, SECTION 3109

2019 CALIFORNIA BUILDING CODE (CBC), TITLE 24 C.C.R., PART 2, CHAPTER 31B

PARTIAL LIST OF APPLICABLE STANDARDS

NFPA 13	AUTOMATIC SPRINKLER SYSTEMS	2016 EDITION
NFPA 14	STANDPIPE SYSTEMS	2016 EDITION
NFPA 15	WATER SPRAY FIXED SYSTEMS	2016 EDITION
NFPA 17	DRY CHEMICAL EXTINGUISHING SYSTEMS	2017 EDITION
NFPA 17A	WET CHEMICAL EXTINGUISHING SYSTEMS	2017 EDITION
NFPA 20	STATIONARY PUMPS	2016 EDITION
NFPA 22	PRIVATE WATER TANKS	2018 EDITION
NFPA 24	PRIVATE FIRE MAINS	2016 EDITION
NFPA 72	NATIONAL FIRE ALARM CODE	2016 EDITION
NFPA 80	FIRE DOOR & OTHER OPENING PROTECTIVES	2016 EDITION
NFPA 2001	CLEAN AGENT FIRE EXTINGUISHING SYSTEMS	2015 EDITION
UL 464	AUDIBLE SIGNALING DEVICES FOR FIRE ALARM AND SIGNALING SYSTEMS, INCLUDING ACCESSORIES	2003 EDITION
UL 521	HEAT DETECTORS FOR FIRE PROTECTIVE SIGNALING SYSTEMS	1999 EDITION
UL 1971	SIGNALING DEVICES FOR HEARING IMPAIRED	2002 EDITION (R2010)
ICC 300	BLEACHERS, FOLDING AND TELESCOPIC SEARING, AND GRANDSTANDS	2017 EDITION
ASCE 7-16	MINIMUM DESIGN LOADS AND ASSOCIATED CRITERIA FOR BUILDINGS AND OTHER STRUCTURES	2016 EDITION
AISC 360-16	SPECIFICATION FOR STRUCTURAL STEEL BUILDINGS	2016 EDITION
AASHTO LRFD SPECS	LRFD BRIDGE DESIGN SPECIFICATIONS (LIGHT POLE DESIGN REFERNCE)	2020 EDITION
ACI 318-14	BUILDING CODE REQUIREMENTS FOR STRUCTURAL CONCRETE AND COMMENTARY	2014 EDITION

SEE CALIFORNIA BUILDING CODE CH. 35 FOR STATE OF CALIFORNIA AMENDMENTS TO THE NFPA STANDARDS.

APPROVAL FROM THE YOLO COUNTY HEALTH DEPARTMENT HAS BEEN GRANTED ON DECEMBER 17, 2021.

GENERAL FIRE NOTES

1. PROVIDE A MINIMUM, UNOBSTRUCTED WIDTH OF 20 FEET, CLEAR TO SKY, VEHICULAR ACCESS TO WITHIN 150 FEET OF ALL PORTIONS OF THE BUILDING EXTERIOR WALLS. 2019 C.F.C. SECTION 503.
2. VEHICULAR ACCESS MUST BE MAINTAINED SERVICEABLE THROUGHOUT CONSTRUCTION.
3. POST "NO PARKING" SIGNS ALONG FIRE VEHICULAR ACCESS ROAD(S). 2019 C.F.C. SECTION 906.
4. FIRE EXTINGUISHER REQUIREMENTS SHALL BE DETERMINED BY FIELD INSPECTOR. 2019 C.F.C. SECTION 906.
5. BUILDING ADDRESS NUMBERS TO BE PROVIDED ON THE FRONT OF ALL BUILDINGS AND SHALL BE VISIBLE AND LEGIBLE FROM STREET FRONTING THE PROPERTY. SAID NUMBER SHALL CONTRAST W/ THEIR BACKGROUND PER 2019 C.F.C. SECTION 505.1.
6. PROVIDED A KEY BOX LOCATION AT ALL FATED ENTRANCES AS REQUIRED BY 2019 C.F.C. SECTION 506.
7. COMMERCIAL DUMPSTERS OR CONTAINERS WITH AN INDIVIDUAL CAPACITY OF 1.5 CUBIC YARDS OR GREATER SHALL NOT BE STORED OR PLACED WITHIN FIVE FEET OF COMBUSTIBLE WALLS, OPENING OR COMBUSTIBLE ROOF EAVE LINES UNLESS AREAS CONTAINING DUMPSTERS AREA PROTECTED BY AN APPROVED SPRINKLER SYSTEM PER 2019 C.F.C. SECTION 304.3.3.
8. ROADS MUST BE CONSTRUCTED OF A MATERIAL WHICH PROVIDES AN ALL WEATHER DRIVING SURFACE AND CAPABLE OF SUPPORTING THE 70,000 POUNDS IMPOSED LOAD FOR THE FIRE APPARATUS. CALCULATIONS STAMPED AND SIGNED BY A REGISTERED ENGINEER SHALL CERTIFY THAT THE PROPOSED SURFACE MEETS THE ABOVE CRITERIA.
9. ALL EXIT DOORS SHALL BE OPERABLE FROM THE INSIDE WITHOUT THE USE OF A KEY OR SPECIAL KNOWLEDGE OR EFFORT. EXIT SIGNS SHALL BE PROVIDED AT ALL EXITS AS REQUIRED BY CALIFORNIA BUILDING CODE, CHAPTER 10. ALL DOOR SWINGS SERVING AN OCCUPANT LOAD OF 50 OR GREATER SHALL SWING IN THE DIRECTION OF TRAVEL.
10. PROVIDE EXIT ILLUMINATION PER THE REQUIREMENTS OF 2019 C.B.C., CHAPTER 10.
11. CONTRACTOR TO PROVIDE TEMPORARY FIRE PROTECTION AND MINIMUM SAFEGUARDS DURING CONSTRUCTION, ALTERATION AND DEMOLITION OPERATIONS PER C.F.C. CHAPTER 33.

DEFERRED APPROVALS

NONE

ACCESSIBILITY NOTES

ACCESSIBLE CONSTRUCTION SUPPORT FACILITIES

11B-201.4 CONSTRUCTION SUPPORT FACILITIES. These requirements shall apply to temporary or permanent construction support facilities for uses and activities not directly associated with the actual processes of construction, including but not limited to offices, meeting rooms, plan rooms, other administrative or support functions. When provided, toilet and bathing facilities serving construction support facilities shall comply with 11B-213. When toilet and bathing facilities serving construction support facilities are provided by portable units, at least one of each type shall be accessible and connected to the construction support facilities it serves by an accessible route.

EXCEPTION: During construction an accessible route shall not be required between site arrival points or the boundary of the area of construction and the entrance to the construction support facilities if the only means of access between them is a vehicular way not providing pedestrian access.

1. MAXIMUM CROSS SLOPE AT WALKWAYS IN THE ACCESSIBLE PATH OF TRAVEL SHALL NOT EXCEED 1:48 (CBC 11B-403.3)
2. LANDINGS ARE REQUIRED AT TOP AND BOTTOM OF RAMPS. (CBC 11B- 405.7) A 60" INTERMEDIATE LANDING IS REQUIRED AT INTERVALS OF 30" VERTICAL CHANGE AND 72" LANDING AT EACH CHANGE OF DIRECTION AND BOTTOM OF RAMP. (CBC 11B-405.7.3 & CBC 11B-405.7.4)
3. ALL BUILDING ENTRANCES THAT ARE ACCESSIBLE TO AND USEABLE BY PERSONS WITH DISABILITIES SHALL BE INDENTIFIED WITH AT LEAST ONE STANDARD SIGN DISPLAYING THE INTERNATIONAL SYMBOL OF ACCESSBILITY AND WITH ADDITIONAL DIRECTIONAL SIGNS, AS REQUIRED, TO BE VISIBLE TO PERSONS ALONG APPROACHING PEDESTRIAN WAYS.
4. MIRROR BOTTOM EDGES SHALL BE LOCATED 40" MAXIMUM ABOVE FLOOR AT LAVATORIES AND COUNTERTOPS (CBC 11B-603.3)
5. TOILET TISSUE DISPENSERS SHALL BE MOUNTED WITHN 7" MIN - 9" MAX. OF THE FRONT EDGE OF TIOLET SEAT & BE RECESSED OR SEMI- RECESSED. (CBC 11B-604.7.1)
6. OPERATING PARTS OF DISPENSING AND DISPOSAL FIXTURES (TOWELS, WASTE, COIN SLOTS, ETC.) SHALL BE WITHIN 48" OF THE FLOOR (40" IN RESTROOMS) PER CBC 11B-308.
7. THE ALCOVE IN WHICH THE WATER FOUNTAIN IS LOCATED SHALL BE NOT LESS THAN 32" WIDE BY 18" DEEP. (CBC 11B-602.8)
8. UNLESS NOTED OTHERWISE, RECEPTACLE OUTLETS SHALL BE INSTALLED NO LESS THAN 15", BOTTOM OF OUTLET ABOVE FINISH FLOOR (CBC 11B-308.1.1 & 11B-308.1.2).
9. CENTER OF SWITCH, INTENDED TO BE USED BY ROOM OCCUPANTS FOR THE CONTROL OF LIGHTING, RECEPTACLE OUTLETS, APPLIANCES OF HVAC EQUIPMENT, SHALL BE LOCATED NOT LESS THAN 36" NOR MORE THAN 48" ABOVE THE FLOOR (CBC 11B-308). SWITCH LOCATION SHALL ALSO BE WITHIN THE BOUNDARIES FOR FORWARD REACH (CBC 11B-308.2) AND SIDE REACH (CBC 11B-308.3).
10. CONTROLS FOR FLUSH VALVES SHALL BE MOUNTED ON THE WIDE SIDE OF THE TOILET AREA AND LOCATED 44" MAX, ABOVE FLOOR, AND 1 1/2" MINIMUM CLEAR FROM GRAB BARS. THE FORCE TO ACTIVATE CONTROLS SHALL BE NO MORE THAN 5 LBS. (CBC 11B-309.4)
11. 15, 20, AND 30 AMP RECEPTACLE OUTLETS SHALL BE INSTALLED NOT MORE THAN 48" MEASURE FROM THE TOP OF THE OUTLET BOX NOR LESS THAN 15" MEASURED FROM THE BOTTOM OFT THE OUTLET BOX, CBC 11B-308.1.2
12. THE HIGHEST POINT OF ACTIVATING HANDLE OR LEVER OF FIRE ALARM INITIATING DEVICES (MANUAL PULL BOXES) SHALL BE LOCATED 42"-48" ABOVE THE FINISH FLOOR. CBC 907.3.2.
13. FAUCET CONTROLS AND OPENING MECHANISMS SHALL BE OPERABLE WITH ONE HAND AND SHALL NOT REQUIRE TIGHT GRASPING, PINCHING, OR TWISTING OF THE WRIST. THE FORCE REQUIRED TO ACTIVATE CONTROLS SHALL BE NO MORE THAN 5 LBS. LEVER OPERATED, PUSH TYPE MECHANISMS ARE ACCEPTABLE. SELF CLOSING VALVES ARE ALLOWED IF THE FAUCET REMAINS OPEN FOR AT LEAST 10 SECONDS. (CBC 11B-309.4)
14. HOT WATER AND DRAIN PIPES UNDER ACCESSIBLE LAVATORIES SHALL BE INSULATED OR OTHERWISE COVERED. THERE SHALL BE NO SHARP OR ABRASIVE OBJECTS OR SURFACES UNDER LAVATORIES.
15. ACCESSIBILE SINKS AND COUNTER SHALL BE CLEAR AND ACCESSIBLE PER CBC 11B-606.2.

RESPONSIBILTY FOR JOB SITE SAFETY

NOTICE TO PERSONS PERFORMING WORK ON JOB SITE, INCLUDING CONTRACTORS, SUBCONTRACTORS, MATERIAL SUPPLIERS AND ANY AGENTS OR EMPLOYEES THEREOF

THESE PLANS AND SPECIFCATIONS DO NOT PROVIDE ANY DIRECTION OR INSTRUCTIONS TO CONTRACTORS, SUBCONTRACTORS, MATERIAL SUPPLIERS OR THEIR EMPLOYEES OR AGENTS RELATED TO CONSTRUCTION MEANS, METHODS, TECHNIQUES, SEQUENCES OR PROCEDURES, SAFETY PRECAUTIONS, MANNERS OR METHODS OF EGRESS OR INGRESS, INCLUDING BUT NOT LIMITED TO JOB SITE SAFETY, THE PHYSICAL CONDITION OF THE JOB SITE, THE MANNER OR METHOD IN WHICH THE AREA WHERE WORK IS PERFORMED IS ACCESSED BY WORKERS, AND SAFETY PROGRAMS OR SAFETY PROTOCOLS OF ANY KIND IN CONNECTION WITH THE WORK. ALL OF THE FOREGOING ARE SOLELY AND EXCLUSIVELY THE RESPONSIBILITY OF THE CONTRACTOR, SUBCONTRACTOR, MATERIAL SUPPLIERS, OR ANY AGENTS OR EMPLOYEES THEREOF.

THE ARCHITECT EXPRESSLY DISCLAIMS ANY CONTROL OVER AND RESPONSIBILITY FOR CONSTRUCTION MEANS, METHODS, TECHNIQUES, SEQUENCES OR PROCEDURES, SAFETY PRECAUTIONS, MANNERS OR METHODS OF EGRESS OR INGRESS, INCLUDING BUT NOT LIMITED TO JOB SITE SAFETY, THE PHYSICAL CONDITION OF THE JOB SITE, THE MANNER OR METHOD IN WHICH THE AREA WHERE WORK IS PERFORMED IS ACCESSED BY WORKERS, AND SAFETY PROGRAMS OR SAFETY PROTOCOLS OF ANY KIND IN CONNECTION WITH THE WORK.

THE ARCHITECT HAS NOT CONDUCTED AN EVALUATION OR ANALYSIS OF SAFETY PROCEDURES OR APPLICABLE LAW REGARDING OR RELATING TO ACCESSING THE JOB SITE OR AREAS OF THE WORK DURING THE COURSE OF CONSTRUCTION.

THE ARCHITECT, THE ARCHITECT'S DESIGNS, AND ANY OTHER WORK PERFORMED BY THE ARCHITECT DO NOT ADDRESS, ANALYZE OR PROVIDE ANY DIRECTION OR ADVICE TO ANY PERSON OR ENTITY ON WHETHER OR NOT THE USE OF EXISTING LADDERS, DOORS, RAILINGS, INGRESS AND INGRESS ROUTES OR THE LIKE ARE IN COMPLIANCE OR NON-COMPLIANCE WITH OSHA, CAL-OSHA(CALIFORNIA ONLY), OR ANY OTHER APPLICABLE STATUTE, REGULATION, OR STANDARD RELATED TO JOB SITE SAFETY DURING THE COURSE OF CONSTRUCTION OF THE IMPROVEMENTS.

Statement of General Conformance
FOR ARCHITECTS/ENGINEERS WHO UTILIZE PLANS,
INCLUDING BUT NOT LIMITED TO SHOP DRAWINGS, PREPARED BY OTHER LICENSED DESIGN PROFESSIONALS AND/OR CONSULTANTS
(Application No. # 02-119490 File No. 57-H3)

☒ The drawings or sheets listed on the index sheet G0.10
☐ This drawing, page of specifications/calculations

have been prepared by other design professionals or consultants who are licensed and/or authorized to prepare such drawings in this state. It has been examined by me for:

1. design intent and appears to meet the appropriate requirements of Title 24, California Code of Regulations and the project specifications prepared by me, and
2. coordination with my plans and specifications and is acceptable for incorporation into the construction of this project.

The Statement of General Conformance "shall not be construed as relieving me of my rights, duties, and responsibilities under Sections 17302 and 81138 of the Education Code and Sections 4-336, 4-341 and 4-344" of Title 24, Part 1. (Title 24, Part 1, Section 4-317 (b))

I certify that: ☒ All drawings of sheets listed on the index sheet marked with an asterisk (*)
☐ This drawing or page

☒ is/are in general conformance and
☒ have been coordinated

Signature: [signature] Date: 04/11/2022

Architect or Engineer designated to be in general responsible charge

Print Name	License Number	Expiration Date
YOUNG MIN	C-33172	05/31/2023

PROJECT DIRECTORY

CLIENT INFORMATION

DAVIS JOINT UNIFIED SCHOOL DISTRICT
1919 FIFTH STREET
DAVIS, CA 95616
EXCECUTIVE DIRECTOR OF CAPTIAL OPERATIONS
TEL: 530/757-5385
CONTACT: DAVID BURKE E-MAIL: dburke@djusd.net

ARCHITECT

LPA, INC.
5161 CALIFORNIA AVE, SUITE 100
IRVINE, CA 92617
TEL: 949/701-4087 FAX: 949/260-1190
CONTACT: YOUNG MIN E-MAIL: ymin@lpadesignstudios.com

LANDSCAPE ARCHITECT

LPA, INC.
431 I STREET, SUITE 107
SACRAMENTO, CA 95814
TEL: 916/287-2341 FAX: 916/287-2400
CONTACT: JOHN COURTNEY E-MAIL: jcourtney@lpadesignstudios.com

CIVIL ENGINEER

LPA, INC.
431 I STREET, SUITE 107
SACRAMENTO, CA 95814
TEL: 916/287-2350 FAX: 916/287-2400
CONTACT: CYNTHIA DUNNELLS E-MAIL: cdunnells@lpadesignstudios.com

STRUCTURAL ENGINEER

LPA, INC.
5161 CALIFORNIA AVE, SUITE 100
IRVINE, CA 92617
TEL: 949/261-1001 FAX: 949/260-1190
CONTACT: DANIEL WANG E-MAIL: dwang@lpadesignstudios.com

MECHANICAL ENGINEER

LPA, INC.
5161 CALIFORNIA AVE, SUITE 100
IRVINE, CA 92617
TEL: 949/701-4279 FAX: 949/260-1190
CONTACT: CHRISTOPHER TINDALL E-MAIL: ctindall@lpadesignstudios.com

ELECTRICAL ENGINEER

LPA, INC.
5161 CALIFORNIA AVE, SUITE 100
IRVINE, CA 92617
TEL: 949/261-1001 FAX: 949/260-1190
CONTACT: STEVE BAKIN E-MAIL: epulido@lpadesignstudios.com

PLUMBING ENGINEER

LPA, INC.
5161 CALIFORNIA AVE, SUITE 100
IRVINE, CA 92617
TEL: 949/701-4089 FAX: 949/260-1190
CONTACT: GREG WEBB E-MAIL: gwebb@lpadesignstudios.com

FIRE PROTECTION CONSULTANT

LP CONSULTING ENGINEERS, INC.
1209 PLEASANT GROVE BLVD.
ROSEVILLE, CA 95678
TEL: 916/721-2929 FAX: 916/783-9446
CONTACT: KEN THOMAS E-MAIL: kthomas@lpengineers.com

SWIMMING POOL CONSULTANT

AQUATIC DESIGN GROUP, INC.
2226 FARADAY AVE.
CARLSBAD, CA 92008
TEL: 800/938-0542
CONTACT: SCOTT FERRELL E-MAIL: sferrell@aquaticdesigngroup.com

VICINITY MAP

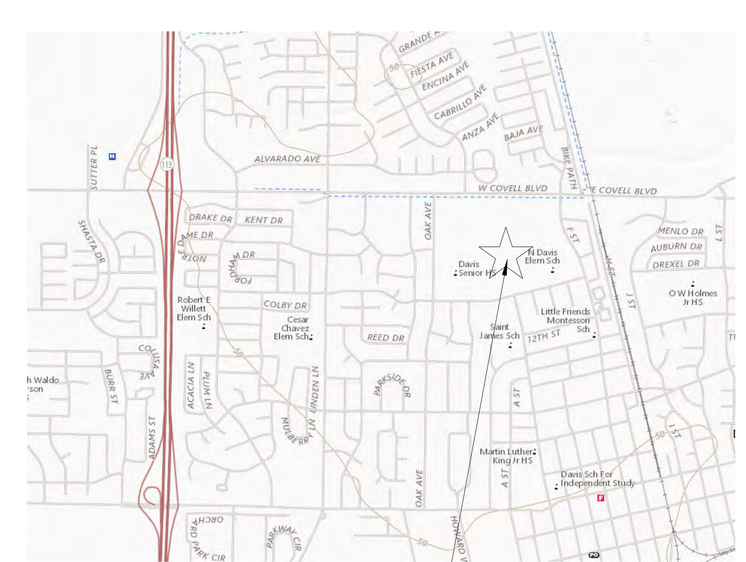

PROPOSED SITE
Davis Joint Unified School District
Davis Senior High School - Aquatics Center

ADDRESS:
315 W 14TH St. #1914
Davis, CA 95616

IDENTIFICATION STAMP
DIV. OF THE STATE ARCHITECT
APP: 02-119490 INC:
REVIEWED FOR
SS ☑ FLS ☑ ACS ☑
DATE: 09/13/2022

LPA
ARCHITECTURE ENGINEERING INTERIORS LANDSCAPE ARCHITECTURE PLANNING
916-287-2400 Office
916-287-2401 Fax
LPADesignStudios.com
431 I Street,
Suite 107
Sacramento, California 95814

LICENSED ARCHITECT YOUNG W MIN No. C-33172 REN.05-31-23 STATE OF CALIFORNIA

This document and all other project documents, ideas, aesthetics and designs incorporated therein are instruments of service. All project documents are copyright protected, are the property of LPA, Inc. (LPA) and cannot be lawfully used in whole or in part for any project or purpose except as set forth in the contractual agreement between LPA and its Client. The unauthorized disclosure and/or use of the project documents (including the creation of derivative works), may give rise to liability for copyright infringement, unlawful disclosure, use or misappropriation of property rights held by LPA. The unauthorized use of the project documents will give rise to the recovery of monetary losses and damages including attorney fees and costs for which the unauthorized user will be held liable. Project documents describe the design intent of the work and are not a representation of as-built or existing conditions. LPA is not responsible for any discrepancies between the project documents and the existing conditions.

© LPA, Inc.

DAVIS SR HIGH SCHOOL AQUATICS CENTER
315 W 14TH ST., DAVIS, CA 95616
Developed for
DAVIS JOINT UNIFIED SCHOOL DISTRICT

Submittal	Date
50% DD REVIEW	06/15/2021
100% DD SUBMITTAL	07/26/2021
50% CD REVIEW	10/08/2021
100% CD DSA SUBMITTAL	10/22/2021
DSA SUBMITTAL	03/24/2022

Job Number	1904413
Date Published	03/24/2022
Checked By	Checker
Scale	As indicated

GENERAL INFORMATION

G0.11

CAL GREEN REQUIREMENTS (DSA GL-4)

CODE SECTION	REQUIREMENTS	REFERENCE	COMMENTS
DIVISION 5.1	**PLANNING AND DESIGN**		
SECTION 5.106	**SITE DEVELOPMENT**		
5.106.4.2	BICYCLE PARKING	SHEET L1.01	
5.106.4.2.1	STUDENT BICYCLE PARKING	SHEET L1.01	
5.106.4.2.2	STAFF BICYCLE PARKING	SHEET L1.01	
5.106.5.3	ELECTRIC VEHICLE (EV) CHARGING	SHEET E1.01	
5.106.5.3.1	SINGLE CHARGING SPACE REQUIREMENTS	NOT APPLICABLE	
5.106.5.3.2	MULTIPLE CHARGING SPACE REQUIREMENTS	NOT APPLICABLE	
5.106.5.3.4	IDENTIFICATION	SHEET E5.01	
5.106.5.3.5	FUTURE CHARGING SPACES	SHEET E1.01	
5.106.8	LIGHT POLLUTION REDUCTION	SHEETS E0.21 & E1.11	
5.106.10	GRADING AND PAVING	SHEETS C2.01-2.04	
5.106.12	SHADE TREES	SHEET L7.03	
5.106.12.1	SURFACE PARKING AREAS	NOT APPLICABLE (NO CHANGE TO ANY...	
5.106.12.2	LANDSCAPE AREAS	SHEET L7.03	
5.106.12.3	HARDSCAPE AREAS	NOT APPLICABLE (AREA OF SPORT)	
DIVISION 5.2	**ENERGY EFFICIENCY**		
SECTION 5.201	**GENERAL**		
5.201.1.1	CALIFORNIA ENERGY CODE	SHEET M0.30	
DIVISION 5.3	**WATER EFFICIENCY AND CONSERVATION**		
SECTION 5.303	**INDOOR WATER USE**		
5.303.3	WATER CONSERVING PLUMBING FIXTURES AND FITTINGS	SHEET P0.20	
5.303.3.1	WATER CLOSETS	SHEET P0.20	PLUMBING FIXTURE ITEMS WC-1 (1.28 GPF) AND WC-2 (1.28 GPF)
5.303.3.2	URINALS	SEE 5.303.3.2.1 & 5.303.3.2.2 BELOW	
5.303.3.2.1	WALL MOUNTED URINALS	SHEET P0.20	PLUMBING FIXTURE ITEMS UR-1 (0.125 GPF) AND UR-2 (0.125 GPF)
5.303.3.2.2	FLOOR MOUNTED URINALS	NOT APPLICABLE	EXCEPT, NO FLOOR MOUNTED URINALS
5.303.3.3	SHOWERHEADS	SHEET P0.20	PLUMBING FIXTURE ITEM SH-1 (1.5 GPM)
5.303.3.3.1	SINGLE SHOWERHEAD	NOT APPLICABLE	
5.303.3.3.2	MULTIPLE SHOWERHEADS SERVING ONE SHOWER	NOT APPLICABLE	
5.303.3.4	FAUCETS AND FOUNTAINS	SEE 5.303.3.4.1 THRU 5.303.3.4.1.5 BELOW	
5.303.3.4.1	NON-RESIDENTIAL LAVATORY FAUCETS	SHEET P0.20	PLUMBING FIXTURE ITEM L-1 (0.5 GPM)
5.303.3.4.1.2	POOL FAUCETS	SHEET P0.20	PLUMBING FIXTURE ITEM S-1 (1.5 GPM)
5.303.3.4.1.3	WASH FOUNTAINS	NOT APPLICABLE	
5.303.3.4.1.4	METERING FAUCETS	SHEET P0.20	PLUMBING FIXTURE ITEM L-1 (0.5 GPM)
5.303.3.4.1.5	METERING FAUCETS FOR WASH FOUNTAINS	NOT APPLICABLE	
5.303.3.4.1.6	STANDARDS FOR PLUMBING FIXTURES AND FITTINGS	SHEET P0.20	
SECTION 5.304	**OUTDOOR WATER USE**		
5.304.6	OUTDOOR POTABLE WATER USE IN LANDSCAPE AREAS	NOT APPLICABLE	
5.304.6.1	NEWLY CONSTRUCTED LANDSCAPES	NOT APPLICABLE	
5.304.6.1	REHABILITATED LANDSCAPES	NOT APPLICABLE	
DIVISION 5.4	**MATERIAL CONSERVATION AND RESOURCE EFFICIENCY**		
SECTION 5.407	**WATER CONSERVATION AND MOISTURE MANAGEMENT**		
5.407.1	WEATHER PROTECTION	ARCHITECTURAL PLANS & SECTIONS	
5.407.2	MOISTURE CONTROL	ARCHITECTURAL PLANS & SECTIONS	
5.407.2.1	SPRINKLERS	SHEET L7.03	
5.407.2.2	ENTRIES AND OPENINGS	ARCHITECTURAL PLANS & SECTIONS	
5.407.2.2.1	EXTERIOR DOOR PROTECTION	ARCHITECTURAL PLANS & SECTIONS	
5.407.2.2.2	FLASHING	ARCHITECTURAL PLANS & SECTIONS	
SECTION 5.408	**CONSTRUCTION WASTE REDUCTION, DISPOSAL AND RECYCLING**		
5.408.1	CONSTRUCTION WASTE MANAGEMENT	SPECIFICATION 017419	
5.408.1.1	CONSTRUCTION WASTE MANAGEMENT PLAN	SPECIFICATION 017419	
5.408.1.2	WASTE MANAGEMENT COMPANY	SPECIFICATION 017419	
5.408.1.3	WASTE STREAM REDUCTION ALTERNATIVE	SPECIFICATION 017419	
5.408.1.4	DOCUMENTATION	SPECIFICATION 017419	
SECTION 5.410	**BUILDING MAINTENANCE AND OPERATIONS**		
5.410.1	RECYCLING BY OCCUPANTS	SHEET L1.02	
5.410.1.2	SAMPLE ORDINANCE	SHEET L1.02	
DIVISION 5.5	**ENVIRONMENTAL QUALITY**		
SECTION 5.504	**POLLUTANT CONTROL**		
5.504.3	COVERING OF DUCT OPENINGS AND PROTECTION OF MECHANICAL EQUIPMENT DURING...	SPECIFICATION - DIVISION 23	
5.504.4	FINISH MATERIAL POLLUTANT CONTROLS	SPECIFICATION - DIVISION 07 & 09	
5.504.4.1	ADHESIVES, SEALANTS, AND CAULKS	SPECIFICATION - DIVISION 07	
5.504.4.3	PAINTS AND COATINGS	SPECIFICATION - DIVISION 07	
5.504.4.3.1	AEROSOL PAINTS AND COATINGS	SPECIFICATION - DIVISION 07	
5.504.4.3.2	VERIFICATION	SPECIFICATION - DIVISION 09	
5.504.4.4	CARPET SYSTEMS	SPECIFICATION - DIVISION 09	
5.504.4.4.1	CARPET CUSHION	SPECIFICATION - DIVISION 09	
5.504.4.4.2	CARPET ADHESIVE	SPECIFICATION - DIVISION 09	
5.504.4.5	COMPOSITE WOOD PRODUCTS	SPECIFICATION - DIVISION 09	
5.504.4.6	RESILIENT FLOORING SYSTEMS	SPECIFICATION - DIVISION 09	
5.504.5.3	FILTERS	SHEETS M0.20, M0.30	
SECTION 5.505	**INDOOR MOSITURE CONTROL**		
5.505.1	INDOOR MOISTURE CONTROL	NOT APPLICABLE	
SECTION 5.506	**INDOOR AIR QUALITY**		
5.506.1	OUTSIDE AIR DELIVERY	SHEETS M0.20, M0.30	
SECTION 5.507	**ENVIRONMENTAL COMFORT**		
5.507.4	ACOUSTICAL CONTROL	SEE BELOW	
5.507.4.1	EXTERIOR NOISE TRANSMISSION, PRESCRIPTIVE METHOD	NOT APPLICABLE	
5.507.4.1.1	NOISE EXPOSURE WHERE NOISE CONTOURS ARE NOT READILY AVAILABLE	NOT APPLICABLE	
5.507.4.2	PERFORMANCE METHOD	NOT APPLICABLE	
5.507.4.2.1	SITE FEATURES	NOT APPLICABLE	
5.507.4.2.2	DOCUMENTATION OF COMPLIANCE	NOT APPLICABLE	
5.507.4.3	INTERIOR SOUND TRANSMISSION	NOT APPLICABLE	
SECTION 5.508	**OUTDOOR AIR QUALITY**		
5.508.1	OZONE DEPLETION AND GREENHOUSE GAS REDUCTIONS	SHEET M0.20	
5.508.1.1	CHLOROFLUOROCARBONS (CFCs)	SHEET M0.20	

IDENTIFICATION STAMP
DIV. OF THE STATE ARCHITECT
APP: 02-119490 INC:
REVIEWED FOR
SS ☑ FLS ☑ ACS ☑
DATE: 09/13/2022

LPA

ARCHITECTURE ENGINEERING INTERIORS
LANDSCAPE ARCHITECTURE PLANNING

916-287-2400 Office

916-287-2401 Fax

LPADesignStudios.com

431 I Street,
Suite 107
Sacramento, California 95814

LICENSED ARCHITECT
YOUNG W. KIM
No. C-33172
REN 05-31-23
STATE OF CALIFORNIA

This document and all other project documents, ideas, aesthetics and designs incorporated therein are instruments of service. All project documents are copyright protected, are the property of LPA, Inc. (LPA) and cannot be lawfully used in whole or in part for any project or purpose except as set forth in the contractual agreement between LPA and its Client. The unauthorized disclosure and/or use of the project documents (including the creation of derivative works), may give rise to liability for copyright infringement, unlawful disclosure, use or misappropriation of property rights held by LPA. The unauthorized use of the project documents will give rise to the recovery of monetary losses and damages including attorney fees and costs for which the unauthorized user will be held liable.
Project documents describe the design intent of the work and are not a representation of as-built or existing conditions. LPA is not responsible for any discrepancies between the project documents and the existing conditions.

© LPA, Inc.

DAVIS SR HIGH SCHOOL
AQUATICS CENTER
315 W 14TH ST., DAVIS, CA 95616

Developed for
DAVIS JOINT UNIFIED SCHOOL DISTRICT

Revision	Date

Submittal	Date
50% DD REVIEW	06/15/2021
100% DD SUBMITTAL	07/26/2021
50% CD REVIEW	10/08/2021
100% CD DSA SUBMITTAL	10/22/2021
DSA SUBMITTAL	03/24/2022

Job Number	1904413
Date Published	03/24/2022
Checked By	Checker
Scale	

CALGREEN

G0.12

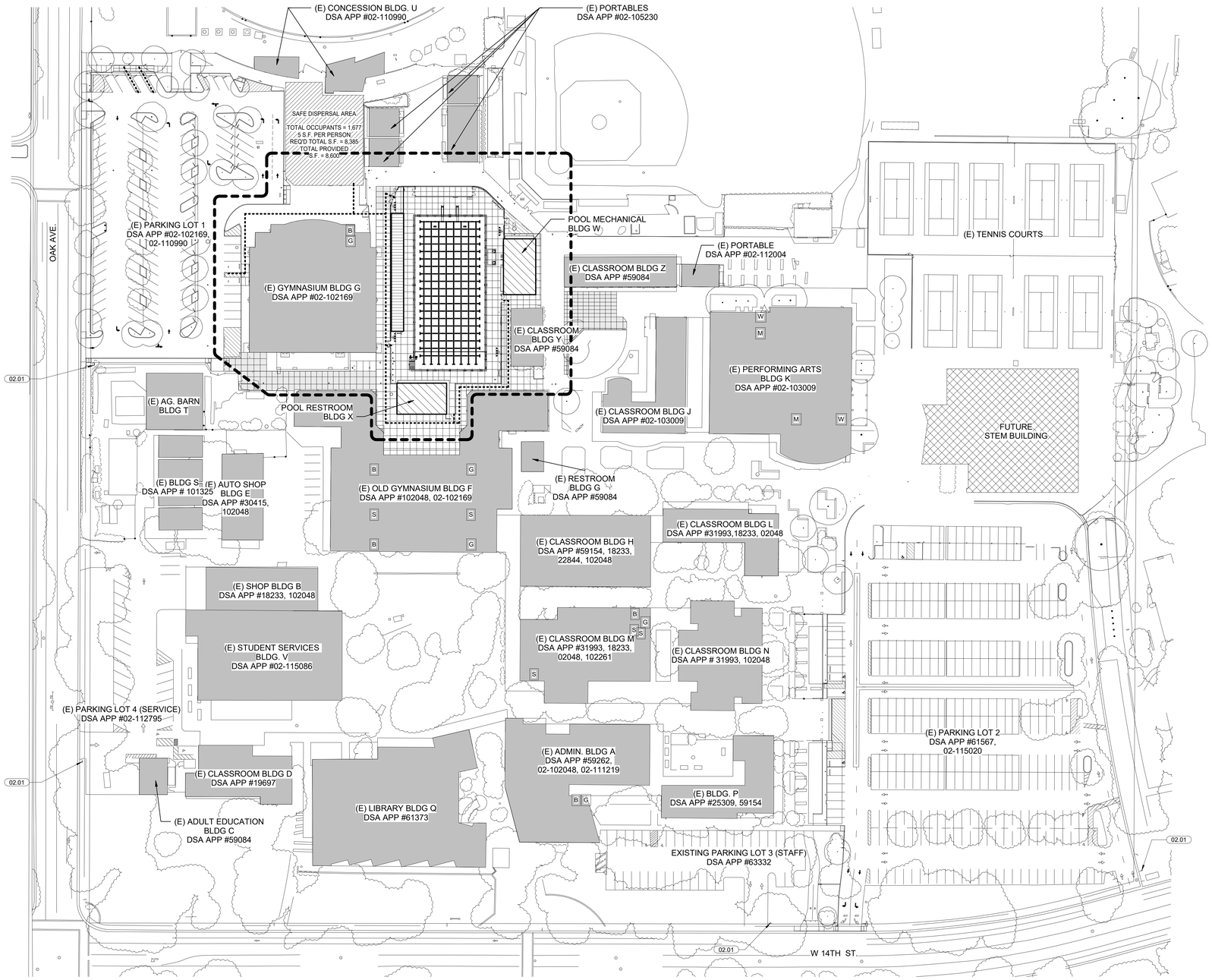

OVERALL SITE PLAN | 1" = 50'-0" | 05

KEYNOTES

02.01	EXISTING TOW-AWAY SIGN

IDENTIFICATION STAMP
DIV. OF THE STATE ARCHITECT
APP: 02-119490 INC:
REVIEWED FOR
SS ☑ FLS ☑ ACS ☑
DATE: 09/13/2022

LEGEND

A# XXXXXX	PRIOR DSA APPROVAL NUMBER
	NEW BUILDING UNDER SCOPE OF WORK
	NEW METAL SHADE STRUCTURE UNDER SCOPE OF WORK
	(E) BUILDINGS NOT UNDER SCOPE OF WORK
	FUTURE BUILDING NOT UNDER SCOPE OF WORK
	SAFE DISPERSAL AREA
B	(E) BOY'S RESTROOMS
G	(E) GIRL'S RESTROOMS
S	(E) STAFF RESTROOMS
	ACCESSIBLE PATH OF TRAVEL
	SCOPE OF WORK

ACCESSIBLE PARKING CALCULATION

(TABLE 11B208.2)

PARKING LOT 1	
TOTAL STALLS:	112
REQUIRED ACCESSIBLE STALLS:	5
REQUIRED VAN ACCESSIBLE STALLS:	1
ACCESSIBLE STALLS PROVIDED:	5
ACCESSIBLE VAN STALLS PROVIDED:	1
PARKING LOT 2	
TOTAL STALLS:	330
REQUIRED ACCESSIBLE STALLS:	8
REQUIRED VAN ACCESSIBLE STALLS:	2
ACCESSIBLE STALLS PROVIDED:	10
ACCESSIBLE VAN STALLS PROVIDED:	5
PARKING LOT 3 (STAFF)	
TOTAL STALLS:	37
REQUIRED ACCESSIBLE STALLS:	2
REQUIRED VAN ACCESSIBLE STALLS:	1
ACCESSIBLE STALLS PROVIDED:	2
ACCESSIBLE VAN STALLS PROVIDED:	1
PARKING LOT 4 (SERVICE)	
TOTAL STALLS:	23
REQUIRED ACCESSIBLE STALLS:	1
REQUIRED VAN ACCESSIBLE STALLS:	1
ACCESSIBLE STALLS PROVIDED:	2
ACCESSIBLE VAN STALLS PROVIDED:	1

GENERAL NOTES

1. FOR ADDITIONAL INFORMATION ON SITE SCOPE, REFER TO LANDSCAPE AND CIVIL DRAWINGS.
2. THE PATH OF TRAVEL IDENTIFIED IN THESE CONSTRUCTION DOCUMENTS IS COMPLIANT WITH CURRENT APPLICABLE CALIFORNIA BUILDING CODE ACCESSIBILITY PROVISIONS FOR PATH OF TRAVEL REQUIREMENTS FOR ALTERATIONS AND STRUCTURAL REPAIRS. AS PART OF THE DESIGN OF THIS PROJECT, THE PATH OF TRAVEL WAS EXAMINED AND ANY ELEMENTS, COMPONENTS, OR PORTIONS OF THE PATH OF TRAVEL THAT WERE DETERMINED TO BE NONCOMPLIANT 1) HAVE BEEN IDENTIFIED AND 2) THE CORRECTIVE WORK NECESSARY TO BRING THEM INTO COMPLIANCE HAS BEEN INCLUDED WITHIN THE SCOPE OF THIS PROJECT'S WORK THROUGH DETAILS, DRAWINGS, AND SPECIFICATIONS INCORPORATED INTO THESE CONSTRUCTION DOCUMENTS. ANY NONCOMPLIANT ELEMENTS, COMPONENTS, OR PORTION OF THE PATH OF TRAVEL THAT WILL NOT BE CORRECTED BY THIS PROJECT BASED ON VALUATION THRESHOLD LIMITATIONS OR A FINDING OF UNREASONABLE HARDSHIP ARE SO INDICATED IN THESE CONSTRUCTION DOCUMENTS. DURING CONSTRUCTION, IF PATH OF TRAVEL ITEMS WITHIN THE SCOPE OF THE PROJECT REPRESENTED AS CODE COMPLIANT ARE FOUND TO BE NONCONFORMING BEYOND REASONABLE CONSTRUCTION TOLERANCES, THEY SHALL BE BROUGHT INTO COMPLIANCE WITH THE CBC AS A PART OF THIS PROJECT BY MEANS OF A "CONSTRUCTION CHANGE DOCUMENT" - FORM DSA 140.
3. ACCESSIBLE PATH OF TRAVEL AS INDICATED ON PLANS IS A BARRIER FREE ACCESS ROUTE WITHOUT ANY ABRUPT LEVEL CHANGES EXCEEDING 1/2" IF BEVELED AT 1:2 MAXIMUM SLOPE OR VERTICAL LEVEL CHANGES NOT EXCEEDING 1/4" MAXIMUM AND AT LEAST 48" IN WIDTH. SURFACE IS STABLE, FIRM, AND SLIP RESISTANT. CROSS SLOPE DOES NOT EXCEED 2% AND SLOPE IN THE DIRECTION OF TRAVEL IS LESS THAN 5% UNLESS OTHERWISE INDICATED. ACCESSIBLE PATH OF TRAVEL SHALL BE MAINTAINED FREE OF OVERHANGING OBSTRUCTIONS TO 80" MINIMUM AND PROTRUDING OBJECTS GREATER THAN 4" PROJECTION FROM WALL ABOVE 27" AND LESS THAN 80". ARCHITECT SHALL VERIFY THAT THERE ARE NO BARRIER IN THE PATH OF TRAVEL.

LPA
ARCHITECTURE ENGINEERING INTERIORS
LANDSCAPE ARCHITECTURE PLANNING

916-287-2400 Office
916-287-2401 Fax
LPADesignStudios.com
431 I Street,
Suite 107
Sacramento, California 95814

LICENSED ARCHITECT
JENNING W. MAN
C-33172
REN: 05-31-23
STATE OF CALIFORNIA

This document and all other project documents, ideas, aesthetics and designs incorporated therein are instruments of service. All project documents are copyright protected, are the property of LPA, Inc. (LPA) and cannot be lawfully used in whole or in part for any project or purpose except as set forth in the contractual agreement between LPA and its Client. The unauthorized disclosure and/or use of the project documents (including the creation of derivative works), may give rise to liability for copyright infringement, unlawful disclosure, use or misappropriation of property rights held by LPA. The unauthorized use of the project documents will give rise to the recovery of monetary losses and damages including attorney fees and costs for which the unauthorized user will be held liable.
Project documents describe the design intent of the work and are not a representation of as-built or existing conditions. LPA is not responsible for any discrepancies between the project documents and the existing conditions.

© LPA, Inc.

DAVIS SR HIGH SCHOOL
AQUATICS CENTER
315 W 14TH ST., DAVIS, CA 95616

Developed for
DAVIS JOINT UNIFIED SCHOOL DISTRICT

Revision	Date

Submittal	Date
50% DD REVIEW	06/15/2021
100% DD SUBMITTAL	07/26/2021
50% CD REVIEW	10/08/2021
100% CD DSA SUBMITTAL	10/22/2021
DSA SUBMITTAL	03/24/2022

Job Number	1904413
Date Published	03/24/2022
Checked By	Checker
Scale	As indicated

OVERALL SITE PLAN

G0.21

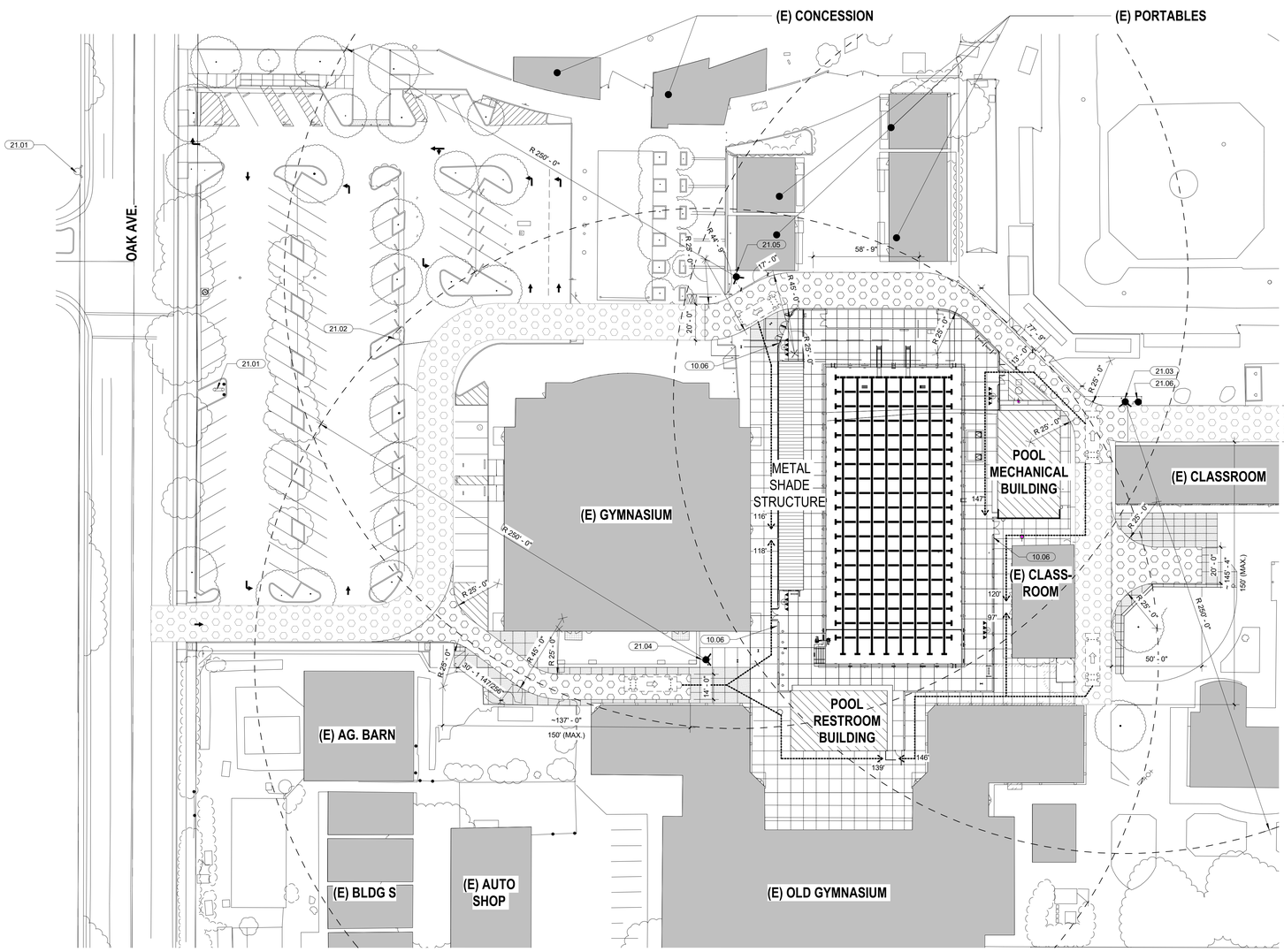

FIRE ACCESS SITE PLAN | 1" = 30'-0" | 06

KEYNOTES

10.06	BLACK KNOX BOX 3200 SURFACE MOUNTED TO GATE POST
21.01	EXISTING F.H. FLOW TEST LOCATION
21.02	EXISTING FIRE HYDRANT
21.03	NEW FIRE HYDRANT #1, REFER TO CIVIL DRAWING
21.04	NEW FIRE HYDRANT #2, REFER TO CIVIL DRAWING
21.05	NEW FIRE HYDRANT #3, REFER TO CIVIL DRAWING
21.06	NEW P.I.V., REFER TO CIVIL DRAWING

IDENTIFICATION STAMP
DIV. OF THE STATE ARCHITECT
APP: 02-119490 INC:
REVIEWED FOR
SS ☑ FLS ☑ ACS ☑
DATE: 09/13/2022

LEGEND

- NEW BUILDING UNDER SCOPE OF WORK
- NEW METAL SHADE STRUCTURE UNDER SCOPE OF WORK
- (E) BUILDINGS NOT UNDER SCOPE OF WORK
- NEW FIRE ACCESS LANE, 20'-0"W U.N.O., UNDER SCOPE OF WORK
- EXISTING FIRE ACCESS LANE (DSA# 02-115020), NOT UNDER SCOPE OF WORK
- FIRE TRUCK
- NEW FIRE HYDRANT, REFER TO CIVIL
- EXISTING FIRE HYDRANT TO REMAIN, PROTECT IN PLACE
- 150'-0" MAX. LENGTH HOSE PULL
- 250'-0" RADIUS FROM FIRE HYDRANT
- PROPERTY LINE
- PIV
- (E) BACK FLOW PREVENTOR
- 1 HOUR RATED WALL ASSEMBLY

FIRE FLOW REQUIREMENTS

CBC APPENDIX TABLES BB 105.1 AND CC 105.1

POOL MECHANICAL BLDG.: 2,080 SF
CONSTRUCTION TYPE: V-B

REQUIRED: FIRE FLOW 1,500 GPM / 2 HR. DURATION / 1 F.H.
NOT SPRINKLERED:
PROVIDED: 1,500 GPM / 2 HR. DURATION / 2 F.H. @ 20 PSI

POOL RESTROOM BLDG.: 1,780 SF
CONSTRUCTION TYPE: V-B

REQUIRED: FIRE FLOW 1,500 GPM / 2 HR. DURATION / 1 F.H.
NOT SPRINKLERED:
PROVIDED: 1,500 GPM / 2 HR. DURATION / 1 F.H. @ 20 PSI

LPA
ARCHITECTURE ENGINEERING INTERIORS
LANDSCAPE ARCHITECTURE PLANNING

916-287-2400 Office
916-287-2401 Fax
LPADesignStudios.com
431 I Street,
Suite 107
Sacramento, California 95814

LICENSED ARCHITECT
YOUNG W. MIN
No. C-33172
EXP. REN 05-31-23
STATE OF CALIFORNIA

This document and all other project documents, ideas, aesthetics and designs incorporated therein are instruments of service. All project documents are copyright protected, are the property of LPA, Inc. (LPA) and cannot be lawfully used in whole or in part for any project or purpose except as set forth in the contractual agreement between LPA and its Client. The unauthorized disclosure and/or use of the project documents (including the creation of derivative works), may give rise to liability for copyright infringement, unlawful disclosure, use or misappropriation of property rights held by LPA. The unauthorized use of the project documents will give rise to the recovery of monetary losses and damages including attorney fees and costs for which the unauthorized user will be held liable.
Project documents describe the design intent of the work and are not a representation of as-built or existing conditions. LPA is not responsible for any discrepancies between the project documents and the existing conditions.

© LPA, Inc.

DAVIS SR HIGH SCHOOL
AQUATICS CENTER
315 W 14TH ST., DAVIS, CA 95616

Developed for
DAVIS JOINT UNIFIED SCHOOL DISTRICT

Revision	Date

Submittal	Date
50% DD REVIEW	06/15/2021
100% DD SUBMITTAL	07/26/2021
50% CD REVIEW	10/08/2021
100% CD DSA SUBMITTAL	10/22/2021
DSA SUBMITTAL	03/24/2022

Job Number	1904413
Date Published	03/24/2022
Checked By	Checker
Scale	As indicated

FIRE ACCESS SITE PLAN

G0.22

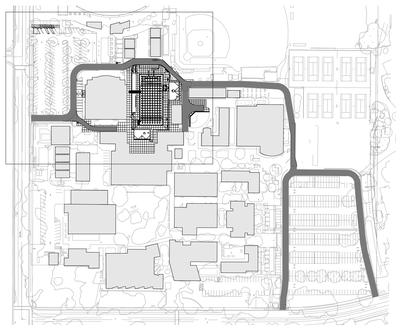

SITE KEY PLAN | 1" = 200'-0" | 17

DSA 810

FIRE & LIFE SAFETY SITE CONDITIONS SUBMITTAL

Division of the State Architect (DSA) documents referenced within this publication are available on the DSA Forms or DSA Publications webpages.

To facilitate the Division of the State Architect's (DSA) fire and life safety plan review of project site conditions, DSA requires the design professional to provide the following information at time of project submittal for projects consisting of construction of a new campus, construction of new building(s), additions to existing buildings, and for site alternate design means for fire department emergency vehicle access, and fire suppression water supply.

Information associated with compliance items 1 through 3 below is to be provided for all project types indicated above. Information associated with items 4 through 7 is to be completed when an alternate means is utilized. Acknowledgement by the school district and signature from the Local Fire Authority (LFA) is only required when an alternate design means is being requested.

The Project Information and Fire & Life Safety Information sections are to be completed for all projects and imaged onto the fire access site plan. When an alternate design means is proposed, all sections on pages 1 and 2 are to be completed and imaged on the fire access site plan.

For additional information refer to the instructions at the end of this form and DSA Policy *PL 09-01: Fire Flow for Buildings*.

PROJECT INFORMATION	
School District/Owner:	Davis Joint Unified School District
Project Name/School:	Davis Senior High School Aquatic Center
Project Address:	315 W 14th Street #1914, Davis, CA 95616

FIRE & LIFE SAFETY INFORMATION				
1.	Has a fire hydrant flow test been performed within the past 12 months? *(If yes, provide a copy of the test data.)*	Yes ☑		No ☐
2.	Was the fire hydrant water flow test performed as part of this LFA review?	Yes ☐		No ☑
3.	Is the project located within a designated fire hazard severity zone (FHSZ) as established by Cal-Fire? *(If yes, indicate FHSZ classification below.)*	Yes ☐		No ☑
	Refer to the following website for FHSZ locations: http://gis.fire.ca.gov/FHSZ/	Moderate ☐	High ☐	Very High ☐
	Wildland Interface Area (WIFA) *(If any designations are checked, project design must meet the requirements of CBC Chapter 7A.)*			WIFA ☐

DGS DSA 810 (revised 12/29/20) DIVISION OF THE STATE ARCHITECT DEPARTMENT OF GENERAL SERVICES Page 1 of 4 STATE OF CALIFORNIA

DSA 810

FIRE & LIFE SAFETY SITE CONDITIONS SUBMITTAL

CONDITION MEANS AND METHODS RESOLUTION		ALTERNATE ACCEPTED			
		Yes	No	N/A	N/R
4.	Emergency vehicle access roadways do not meet CFC requirements.				
4a.	**Acceptable Alternate:** Emergency vehicle and personnel access as proposed by the project architect is acceptable for providing fire suppression and protection of life and property.	✔			
5.	**Fire Hydrants:** Number and spacing does not meet CFC requirements.			✔	
5a.	**Acceptable Alternate:** Number of fire hydrants and spacing as proposed by the project architect is acceptable for fire suppression and protection of life and property.				
6.	**Fire Hydrants:** Water flow and pressure are less than CFC minimum.			✔	
6a.	**Acceptable Alternate:** The available flow and pressure is acceptable for providing fire suppression and protection of life and property.				
7.	Location of fire department connection(s) serving fire sprinkler systems or standpipe systems does not meet CFC requirements.				
7a.	**Acceptable Alternate:** The location of fire department connection serving the fire sprinkler system and/or standpipe system is acceptable for providing fire suppression and protection of life and property.	✔			

School District Acceptance of Acceptable Design Alternates

By signing this form, the school district acknowledges and accepts the proposed design as an alternative to California Building Code (CBC) and California Fire Code (CFC) minimum requirements, as indicated by one or more of the conditions indicated at items 4a, 5a, 6a or 7a, for providing fire and life safety protection of life and property.

Accepted by: Alain Contreras Title: Facilities Project Manager

Signature: Date: 08/02/21

LOCAL FIRE AUTHORITY (LFA) INFORMATION	
LFA Agency Name:	City Of Davis Fire Department
LFA Review Official:	Patrick Sandholt
Title:	Fire Marshal — Work Phone: (530) 757-5682
Work Email:	psandholdt@cityofdavis.org

LFA Reviewer's Signature: Date: 8/3/21

DGS DSA 810 (revised 12/29/20) DIVISION OF THE STATE ARCHITECT DEPARTMENT OF GENERAL SERVICES Page 2 of 4 STATE OF CALIFORNIA

12/10/20 0 8:15
SANDHOLT, MINS, HARGROVE/KI

FLOW HYDRANT - HIGH SCHOOL PARKING LOT NEAR GYM ON OAK AVE
STATIC/RESIDUAL HYDRANT - CORNER OF SCHIPPS DR AND OAK AVE

FLOW AT 20 PSI
5385 GPM

PRODUCTS RESOURCES TESTING SOFTWARE LOGIN HOSE MONSTER UNIVERSITY CONTACT BLOG ACCOUNT

COVID-19 UPDATE

The Hose Monster Company is fully operational, taking and processing orders as well as answering any and all technical, product and customer ser
disruption of the shipping industry, there may be some slight delays in receiving your new equipment. Thank you for your pa

RESOURCES

RECEIVED
DEC 17 2020
DAVIS FIRE DEPT.

City of Davis Fire Department
23 Russell Blvd.
Davis, CA 95616
530-757-5684

HYDRANT FLOW TEST CALCULATOR: CALCULATE RATED CAPACITY AT 20 PSI

The Hydrant Flow Test Calculator measures the rated capacity at 20 psi of a fire hydrant. The rated capacity calculation is useful in determining the total water supply at a given point in the hydrant or water main. The calculation offers more useful information than the test flow by itself and is used by insurance underwriters. For more information see NFPA 291, AWWA M-17, or our web page on Hydrant Flow Testing.

RESOURCE DOWNLOADS
TESTING APPLICATIONS
CALCULATORS
CALCULATE RATED CAPACITY AT 20 PSI
PUMP TEST HOSE CALCULATOR
FAQ
GLOSSARY

Static Pressure (PSI): 52
Residual Pressure (PSI): 49
Total Test Flow rate (GPM): 1500
CALCULATE

GPM at 20 psi Gilb.
Class AA
Marking color: Light Blue
% Pressure Drop: 5.8%

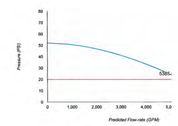

INCREASE PRODUCTIVITY AND SAFETY ON THE JOB

VIEW OUR PRODUCTS

ABOUT US Terms & Conditions Privacy Policy

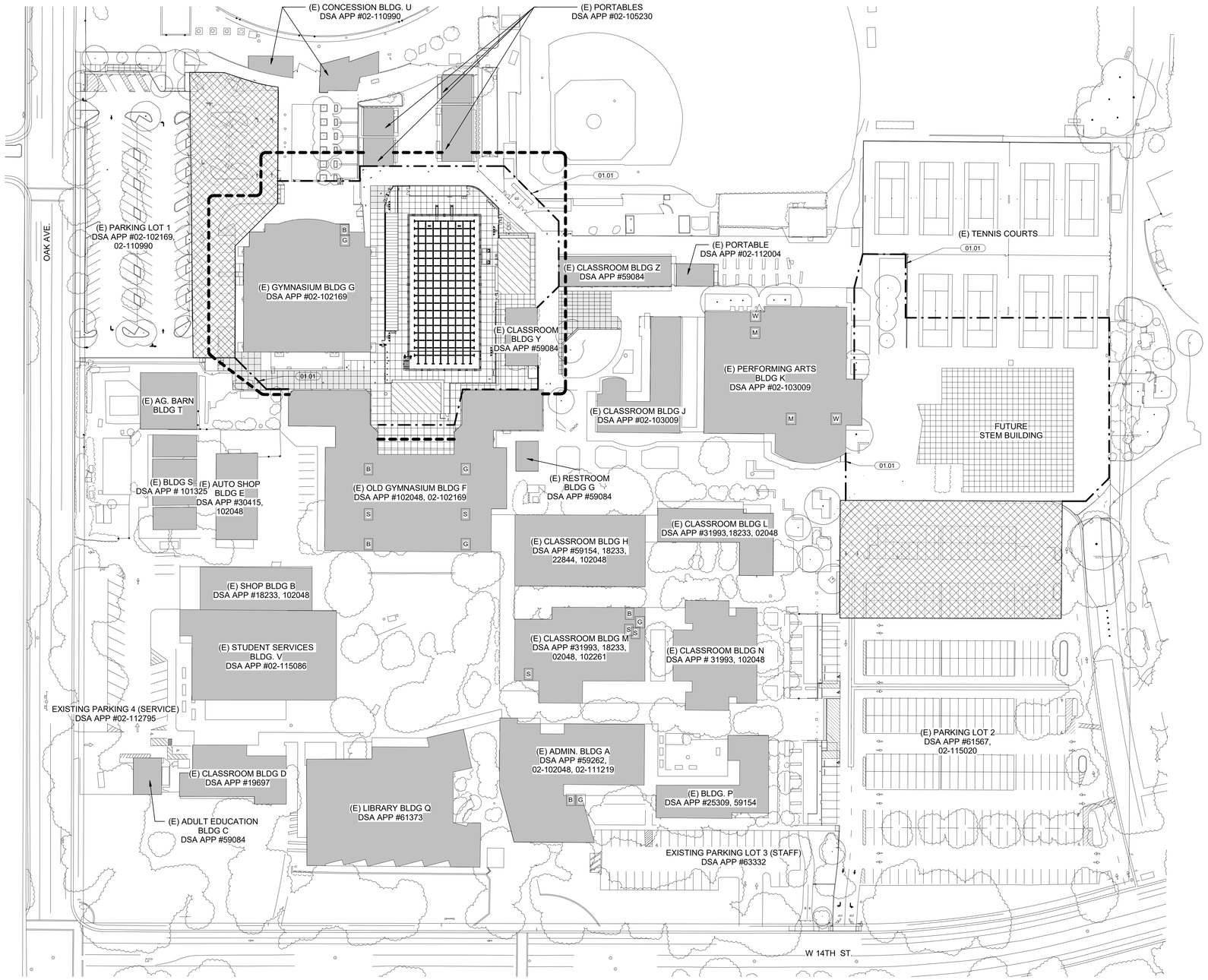

CONSTRUCTION STAGING AREA PLAN | 1" = 50'-0" | 05

KEYNOTES

01.01	CONSTRUCTION TEMPORARY FENCING BY CONTRACTOR

IDENTIFICATION STAMP
DIV. OF THE STATE ARCHITECT
APP: 02-119490 INC:
REVIEWED FOR
SS ☑ FLS ☑ ACS ☑
DATE: 09/13/2022

LEGEND

- NEW BUILDING UNDER SCOPE OF WORK
- NEW METAL SHADE STRUCTURE UNDER SCOPE OF WORK
- CONTRACTOR STAGING AREA
- (E) BUILDING NOT UNDER SCOPE OF WORK
- FUTURE BUILDING NOT UNDER SCOPE OF WORK
- TEMPORARY FENCING
- SCOPE OF WORK

GENERAL NOTES

LPA
ARCHITECTURE ENGINEERING INTERIORS
LANDSCAPE ARCHITECTURE PLANNING

916-287-2400 Office
916-287-2401 Fax
LPADesignStudios.com
431 I Street,
Suite 107
Sacramento, California 95814

LICENSED ARCHITECT
JOHNG W. BAE
Lic. C-33172
REN 05-31-23
STATE OF CALIFORNIA

This document and all other project documents, ideas, aesthetics and designs incorporated therein are instruments of service. All project documents are copyright protected, are the property of LPA, Inc. (LPA) and cannot be lawfully used in whole or in part for any project or purpose except as set forth in the contractual agreement between LPA and its Client. The unauthorized disclosure and/or use of the project documents (including the creation of derivative works), may give rise to liability for copyright infringement, unlawful disclosure, use or misappropriation of property rights held by LPA. The unauthorized use of the project documents will give rise to the recovery of monetary losses and damages including attorney fees and costs for which the unauthorized user will be held liable.
Project documents describe the design intent of the work and are not a representation of as-built or existing conditions. LPA is not responsible for any discrepancies between the project documents and the existing conditions.

© LPA, Inc.

DAVIS SR HIGH SCHOOL
AQUATICS CENTER
315 W 14TH ST., DAVIS, CA 95616

Developed for
DAVIS JOINT UNIFIED SCHOOL DISTRICT

Revision	Date

Submittal	Date
50% DD REVIEW	06/15/2021
100% DD SUBMITTAL	07/26/2021
50% CD REVIEW	10/08/2021
100% CD DSA SUBMITTAL	10/22/2021
DSA SUBMITTAL	03/24/2022

Job Number	1904413
Date Published	03/24/2022
Checked By	Checker
Scale	As indicated

CONSTRUCTION
STAGING SITE PLAN

G0.23

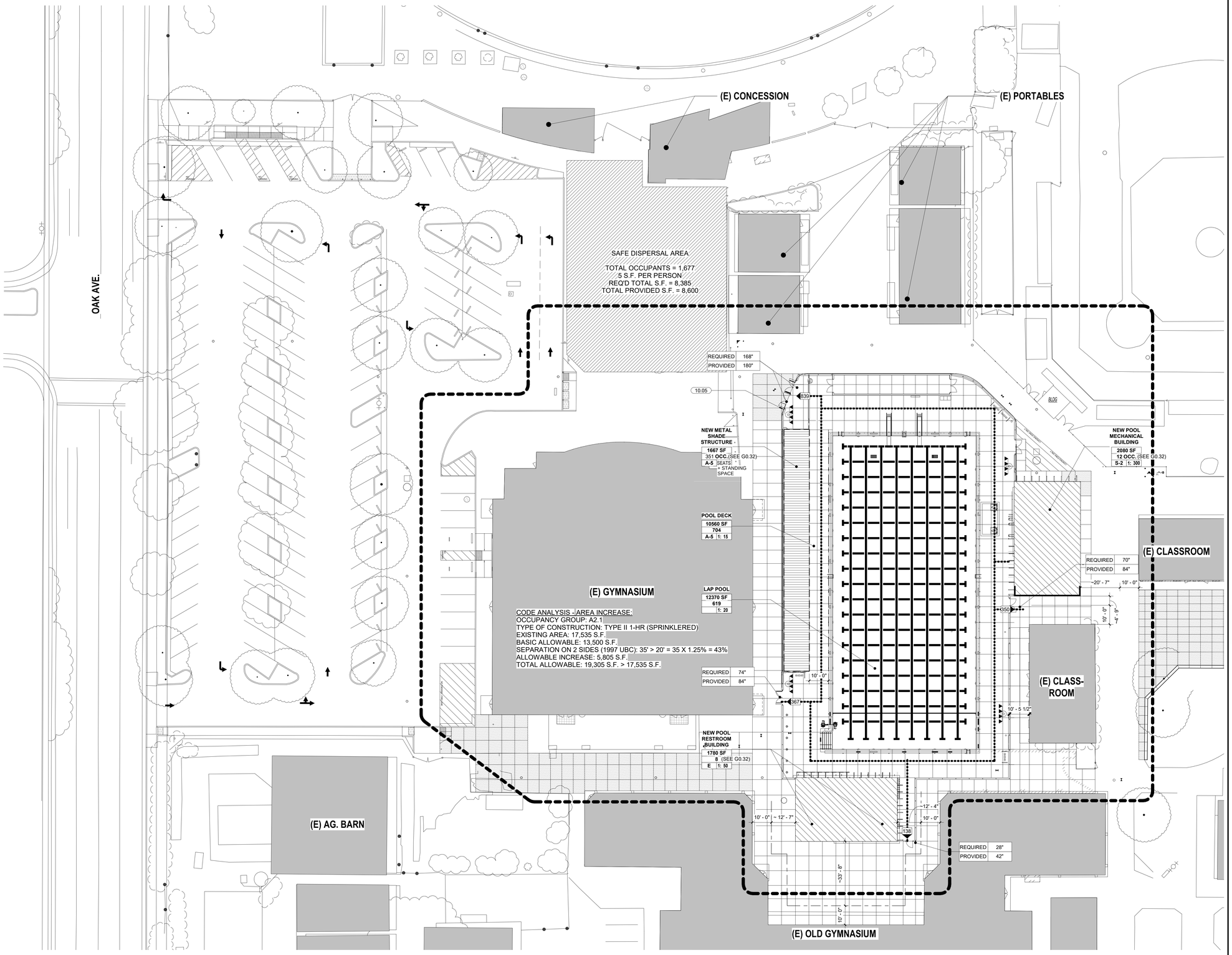

SITE PLAN 1" = 20'-0" 05

KEYNOTES

10.05	SIGNAGE FOR ASSISTIVE LISTENING DEVICES. REFER TO 23/A10.11 & LEGEND ON G0.31

CODE ANALYSIS

LAP POOL OCCUPANT LOAD (CBC CHAPTER 31 - SECTION 3120B.2.2)

LAP POOL:	20 SQ. FT. / OCCUPANT
LAP POOL AREA:	12,370
LAP POOL OCCUPANT:	619 OCCUPANTS

POOL DECK OCCUPANT LOAD (CBC CHAPTER 10 - TABLE 1004.5)

POOL DECK:	15 SQ. FT. / OCCUPANT
POOL DEK AREA:	10,560
POOL DECK OCCUPANT:	704 OCCUPANTS

POOL CANOPY/BLEACHERS OCCUPANT LOAD (CBC CHAPTER 10 - TABLE 1004.5)

POOL DECK:	5 SQ. FT. / OCCUPANT (OPEN AREA), OCC. BASED ON NUMBER OF SEATS AT BLEACHERS
POOL DEK AREA:	152 S.F. + BLEACHER SEATS
POOL DECK OCCUPANT:	31 OCCUPANTS + 320 BLEACHER OCCUPANTS = 351 OCC.

POOL OCCUPANT LOAD

12	POOL MECHANICAL BUILDING OCC.
8	POOL RESTROOM BUILDING OCC.
351	METAL SHADE STRUCTURE OCC.
619	LAP POOL OCC.
704	POOL DECK OCC.
1,694	TOTAL OCC.

MIN. (4) EXITS OR ACCESS TO EXIT FROM POOL PER TABLE 1006.3.2

NEW BUILDING
NEW METAL SHADE STRUCTURE
EXISTING BUILDING
XXXX — ROOM NAME
XXXX — ROOM NUMBER
XXX SF — SQUARE FOOTAGE
XXXX — OCCUPANT LOAD
X XX — OCCUPANCY LOAD FACTOR / OCCUPANCY GROUP
0 — INDIVIDUAL ROOM OCCUPANCY LOAD
0 — COMBINED ROOM OCCUPANCY LOAD
EGRESS PATH OF TRAVEL / TRAVEL DISTANCE
SCOPE OF WORK
1 HOUR RATED MASONRY WALL

ASSISTIVE LISTENING DEVICES - CBC 11B-219

	# OF OCC.	TOTAL # DEVICES
NEW METAL SHADE STRUCTURE	334	14

TOTAL DEVICES = 14

*NOTE: NUMBER OF DEVICES TO BE PROVIDED SHALL BE 4% NUMBER OF SEATS, BUT NO LESS THAN 2 PER ROOM. 25% OF DEVICES SHALL BE COMPATIBLE WITH HEARING AIDS, BUT NO FEWER THAN 2

IDENTIFICATION STAMP
DIV. OF THE STATE ARCHITECT
APP: 02-119490 INC:
REVIEWED FOR
SS ☑ FLS ☑ ACS ☑
DATE: 09/13/2022

LPA
ARCHITECTURE ENGINEERING INTERIORS
LANDSCAPE ARCHITECTURE PLANNING
916-287-2400 Office
916-287-2401 Fax
LPADesignStudios.com
431 I Street,
Suite 107
Sacramento, California 95814

LICENSED ARCHITECT
BRIAN W. AIN
C-33172
REN 05-31-23
STATE OF CALIFORNIA

This document and all other project documents, ideas, aesthetics and designs incorporated therein are instruments of service. All project documents are copyright protected, are the property of LPA, Inc. (LPA) and cannot be lawfully used in whole or in part for any project or purpose except as set forth in the contractual agreement between LPA and its Client. The unauthorized disclosure and/or use of the project documents (including the creation of derivative works), may give rise to liability for copyright infringement, unlawful disclosure, use or misappropriation of property rights held by LPA. The unauthorized use of the project documents will give rise to the recovery of monetary losses and damages including attorney fees and costs for which the unauthorized user will be held liable.
Project documents describe the design intent of the work and are not a representation of as-built or existing conditions. LPA is not responsible for any discrepancies between the project documents and the existing conditions.

© LPA, Inc.

DAVIS SR HIGH SCHOOL
AQUATICS CENTER
315 W 14TH ST., DAVIS, CA 95616

Developed for
DAVIS JOINT UNIFIED SCHOOL DISTRICT

Revision	Date

Submittal	Date
50% DD REVIEW	06/15/2021
100% DD SUBMITTAL	07/26/2021
50% CD REVIEW	10/08/2021
100% CD DSA SUBMITTAL	10/22/2021
DSA SUBMITTAL	02/24/2022

Job Number	1904413
Date Published	03/24/2022
Checked By	Checker
Scale	As indicated

CODE ANALYSIS
SITE PLAN

G0.31

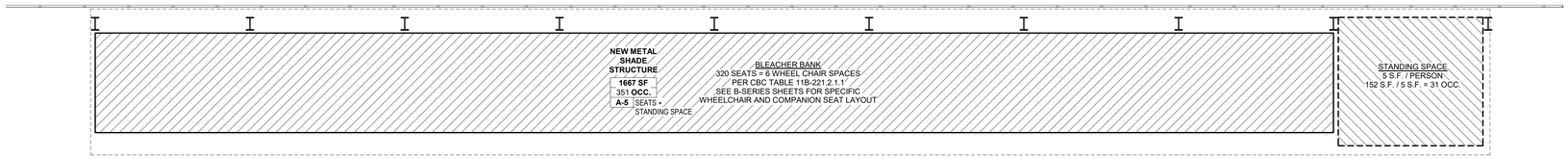

CODE ANALYSIS FLOOR PLAN - METAL SHADE STRUCTURE | 3/16" = 1'-0" | 08

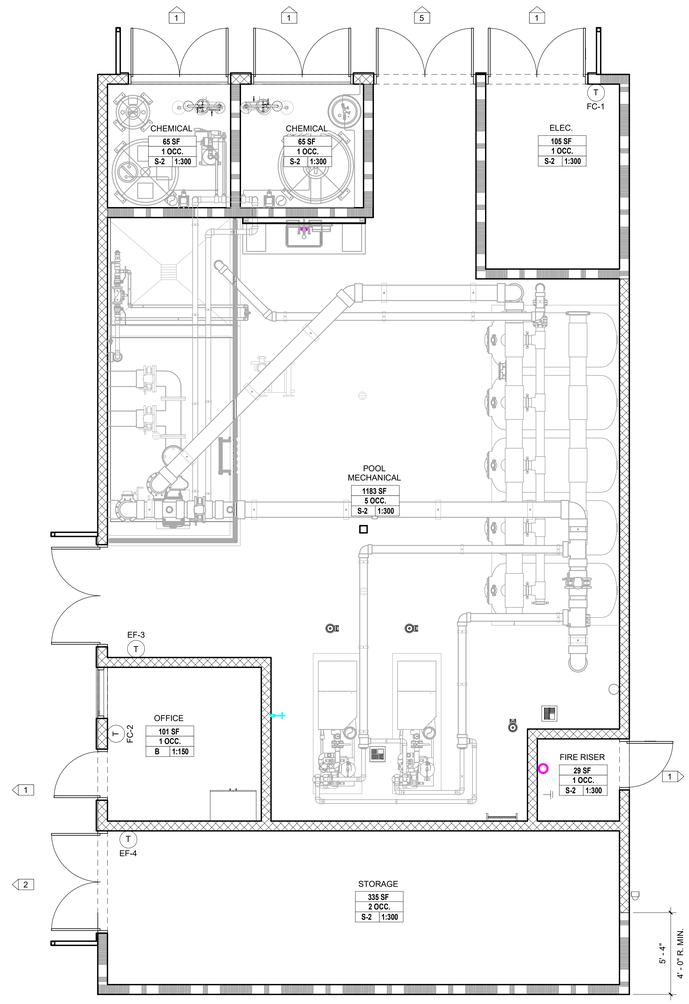

CODE ANALYSIS FLOOR PLAN - POOL MECHANICAL BUILDING | 1/4" = 1'-0" | 05

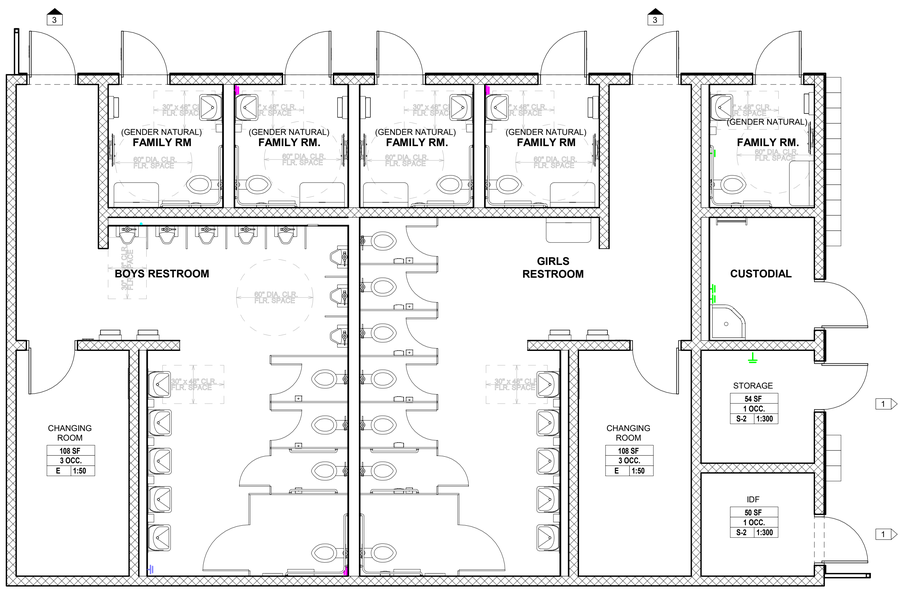

CODE ANALYSIS FLOOR PLAN - POOL RESTROOM BUILDING | 1/4" = 1'-0" | 13

CODE ANALYSIS

POOL MECHANICAL BUILDING

CHAPTER 3 - OCCUPANCY CLASSIFICATION AND USE

BUILDING USE:	MECHANICAL
OCCUPANCY:	S-2
ACCESSORY OCCUPANCIES (508.2):	B (MAX 10% OF TOTAL SQ.FT.)
CONSTRUCTION TYPE:	TYPE V-B
FIRE PROTECTION:	NON-SPRINKLERED (FULLY AUTOMATIC SPRINKLERED IN CHEM ROOMS ONLY)

BASIC ALLOWABLE AREA AND HEIGHT - CBC (CHAPTER 5)

	ALLOWED	PROVIDED
ALLOWABLE AREA (TABLE 506.2)	13,500 SQ.FT.	2,257 SQ.FT. (w/ PROJECTION)
NUMBER OF STORIES (TABLE 504.4)	2	1
ALLOWABLE HEIGHT (TABLE 504.3)	40'-0"	18'-8"

FIRE-RESISTANCE RATING REQ FOR BLDG ELEMENTS (CBC 601)

PRIMARY STRUCTURAL FRAME:	0-hr
EXTERIOR BEARING WALLS:	0-hr
INTERIOR BEARING WALLS:	0-hr
EXTERIOR NONBEARING WALLS:	0-hr
INTERIOR NONBEARING WALLS:	0-hr
FLOOR CONSTRUCTION:	0-hr
ROOF CONSTRUCTION:	0-hr

FIRE-RESISTANCE RATING REQ FOR EXTERIOR WALLS (TABLE 602)

1-HR PROTECTED:	< 5'-0"
1-HR PROTECTED:	5'-0" < X < 10'
NO RATING REQUIRED:	10' < X < 30'
NO RATING REQUIRED:	< 30'-0"

POOL RESTROOM BUILDING

CHAPTER 3 - OCCUPANCY CLASSIFICATION AND USE

BUILDING USE:	RESTROOM W/ LOCKER
OCCUPANCY:	E
ACCESSORY OCCUPANCIES (508.2):	S-2 (MAX 10% OF TOTAL SQ.FT.)
CONSTRUCTION TYPE:	TYPE V-B
FIRE PROTECTION:	NON-SPRINKLERED

BASIC ALLOWABLE AREA AND HEIGHT - CBC (CHAPTER 5)

	ALLOWED	PROVIDED
ALLOWABLE AREA (TABLE 506.2)	6,000 SQ.FT.	2,043 SQ.FT. (w/ PROJECTION)
NUMBER OF STORIES (TABLE 504.4)	1	1
ALLOWABLE HEIGHT (TABLE 504.3)	40'-0"	16'-0"

FIRE-RESISTANCE RATING REQ FOR BLDG ELEMENTS (CBC 601)

PRIMARY STRUCTURAL FRAME:	0-hr
EXTERIOR BEARING WALLS:	0-hr
INTERIOR BEARING WALLS:	0-hr
EXTERIOR NONBEARING WALLS:	0-hr
INTERIOR NONBEARING WALLS:	0-hr
FLOOR CONSTRUCTION:	0-hr
ROOF CONSTRUCTION:	0-hr

FIRE-RESISTANCE RATING REQ FOR EXTERIOR WALLS (TABLE 602)

1-HR PROTECTED:	< 5'-0"
1-HR PROTECTED:	5'-0" < X < 10'
NO RATING REQUIRED:	10' < X < 30'
NO RATING REQUIRED:	< 30'-0"

METAL SHADE STRUCTURE

CHAPTER 3 - OCCUPANCY CLASSIFICATION AND USE

STRUCTURE USE:	ASSEMBLY - BLEACHERS
OCCUPANCY:	A-5
CONSTRUCTION TYPE:	TYPE V-B
FIRE PROTECTION:	NONE

BASIC ALLOWABLE AREA AND HEIGHT - CBC (CHAPTER 5)

	ALLOWED	PROVIDED
ALLOWABLE AREA (TABLE 506.2)	UNLIMITED	1,667 SQ.FT
NUMBER OF STORIES (TABLE 504.4)	UNLIMITED	1
ALLOWABLE HEIGHT (TABLE 504.3)	40'	12'-6 1/2"

FIRE-RESISTANCE RATING REQ FOR BLDG ELEMENTS (CBC 601)

PRIMARY STRUCTURAL FRAME:	0-hr
ROOF CONSTRUCTION:	0-hr

FIRE-RESISTANCE RATING REQ FOR EXTERIOR WALLS (TABLE 602)

1-HR PROTECTED:	< 5'-0"
1-HR PROTECTED:	5'-0" < X < 10'
NO RATING REQUIRED:	10' < X < 30'
NO RATING REQUIRED:	< 30'-0"

MIN. NUMBER OF REQ PLUMBING FIXTURES (CBC CHAPTER 31 - SECTION 3116B)

PLUMBING FIXTURE COUNT PER SECTION 3116B.2

POOL:	15 SQ FT / OCCUPANT
POOL SURFACE AREA:	12,370 SQ.FT.

TOTAL OCCUPANTS:

12,370 / 15 =	825 OCCUPANTS
TOTAL MALES:	412 OCCUPANTS
TOTAL FEMALES:	413 OCCUPANTS

REQUIRED:

	WATER CLOSET	URINALS	LAVATORIES	SHOWERS
MEN	6	6	5	9
WOMEN	7	-	5	9

PROVIDED:

	WATER CLOSET	URINALS	LAVATORIES	SHOWERS
MEN	4	8	5	9
WOMEN	12	-	5	9

REQUIRED DRINKING FOUNTAINS:	4	
PROVIDED DRINKING FOUNTAINS:	4	(SEE SITE PLAN)

MASONRY WALL CONSTRUCTION

1 HOUR RATED MASONRY WALL CONSTRUCTION TO MATCH DESIGN NO. U937

XXXX — ROOM NAME
XXXX — ROOM NUMBER
XXX SF — SQUARE FOOTAGE
XXXX — OCCUPANT LOAD
X | XX — OCCUPANCY LOAD FACTOR / OCCUPANCY GROUP

0 — INDIVIDUAL ROOM OCCUPANCY LOAD
0 — COMBINED ROOM OCCUPANCY LOAD

IDENTIFICATION STAMP
DIV. OF THE STATE ARCHITECT
APP: 02-119490 INC:
REVIEWED FOR
SS ☑ FLS ☑ ACS ☑
DATE: 09/13/2022

LPA
ARCHITECTURE ENGINEERING INTERIORS
LANDSCAPE ARCHITECTURE PLANNING

916-287-2400 Office
916-287-2401 Fax
LPADesignStudios.com
431 I Street,
Suite 107
Sacramento, California 95814

LICENSED ARCHITECT
ZHENG WAIN
C-33172
SEN 05-31-23
STATE OF CALIFORNIA

This document and all other project documents, ideas, aesthetics and designs incorporated therein are instruments of service. All project documents are copyright protected, are the property of LPA, Inc. (LPA) and cannot be lawfully used in whole or in part for any project or purpose except as set forth in the contractual agreement between LPA and its Client. The unauthorized disclosure and/or use of the project documents (including the creation of derivative works), may give rise to liability for copyright infringement, unlawful disclosure, use or misappropriation of property rights held by LPA. The unauthorized use of the project documents will give rise to the recovery of monetary losses and damages including attorney fees and costs for which the unauthorized user will be held liable.
Project documents describe the design intent of the work and are not a representation of as-built or existing conditions. LPA is not responsible for any discrepancies between the project documents and the existing conditions.

© LPA, Inc.

DAVIS SR HIGH SCHOOL
AQUATICS CENTER
315 W 14TH ST., DAVIS, CA 95616

Developed for
DAVIS JOINT UNIFIED SCHOOL DISTRICT

Revision	Date

Submittal	Date
50% DD REVIEW	06/15/2021
100% DD SUBMITTAL	07/26/2021
50% CD REVIEW	10/08/2021
100% CD DSA SUBMITTAL	10/22/2021
DSA SUBMITTAL	03/24/2022

Job Number	1904413
Date Published	03/24/2022
Checked By	Checker
Scale	As indicated

CODE ANALYSIS
FLOOR PLAN

G0.32

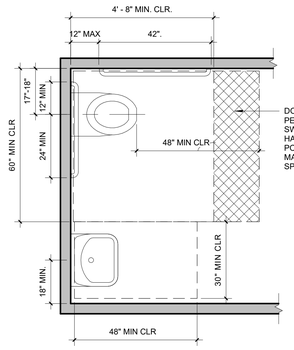

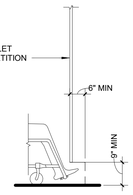

ELEVATION ADULT

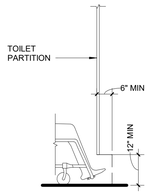

ELEVATION CHILDREN (K-12)

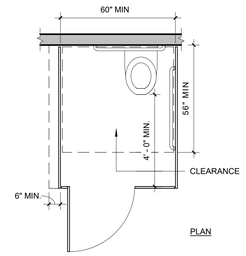

PLAN

NOTE:
TOE CLEARANCE AT THE SIDE PARTITION IS NOT REQUIRED IN A COMPARTMENT GREATER THAN 66" WIDE

CBC 11B-604.3.1

CBC 11B-604.8.1.4

ACCESSIBLE FIXTURES AT SINGLE ACCOMMODATION R.R. | 16

WHEELCHAIR ACCESSIBLE TOILET COMPARTMENT TOE CLEARANCE | 3/8" = 1'-0" | 08

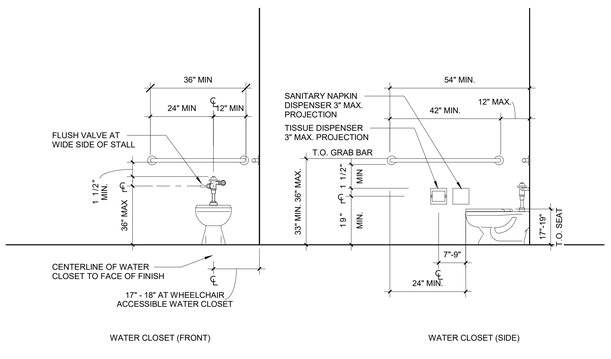

WATER CLOSET (FRONT) WATER CLOSET (SIDE)

CBC 11B-604.1/2/7

RESTROOM MOUNTING HEIGHTS | 1/2" = 1'-0" | 19

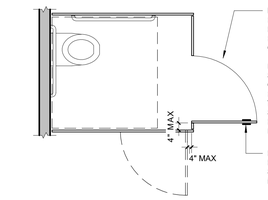

COMPARTMENT DOOR REQUIREMENTS

NOTE: TOILET COMPARTMENT DOORS INCLUDING HARDWARE, SHALL BE MIN. 34" CLR. AND COMPLY WITH CBC.

CBC 11B-604.8.1.2

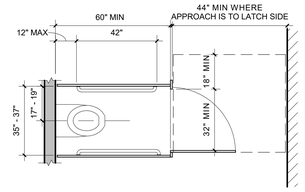

AT AMBULATORY STALL

CBC 11B-604.8.2

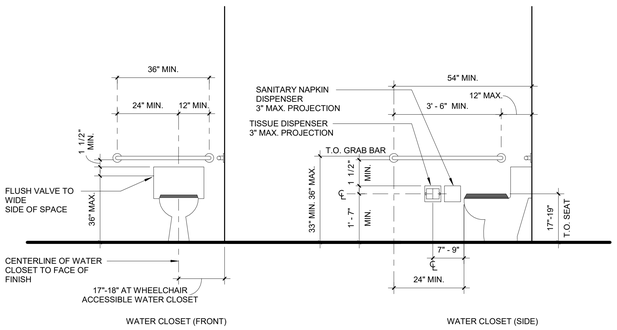

WATER CLOSET (FRONT) WATER CLOSET (SIDE)

CBC 11B-604.1/2/7

ACCESSIBLE MOUNTING HEIGHTS | 1/2" = 1'-0" | 18

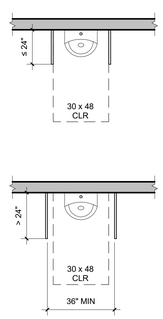

CBC 11B-305.7.1

ACCESSIBLE URINAL PARTITIONS | 3/8" = 1'-0" | 14

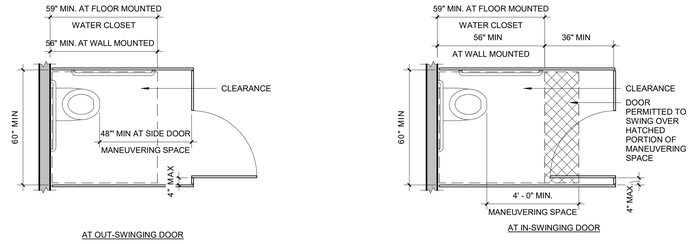

CBC 11B-604.8.1.1.3

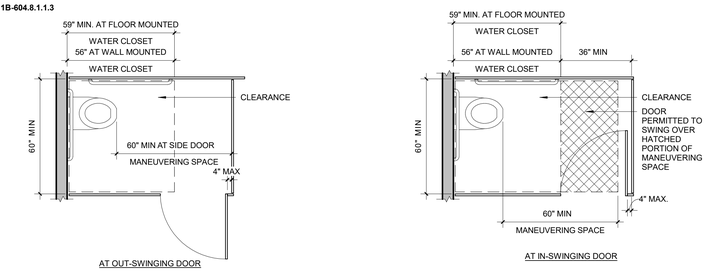

CBC 11B-604.8.1.1.2

ACCESSIBLE TOILET CLEARANCES | 3/8" = 1'-0" | 06

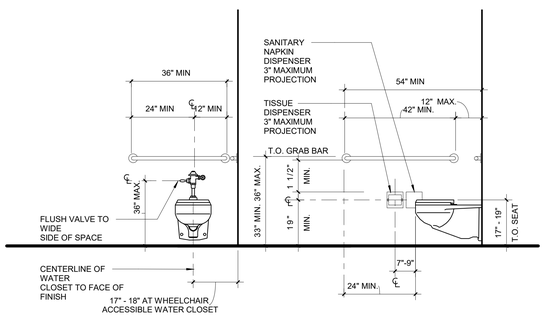

WATER CLOSET (FRONT) WATER CLOSET (SIDE)

CBC 11B-604.1/2/7

ACCESSIBLE MOUNTING HEIGHTS | 1/2" = 1'-0" | 17

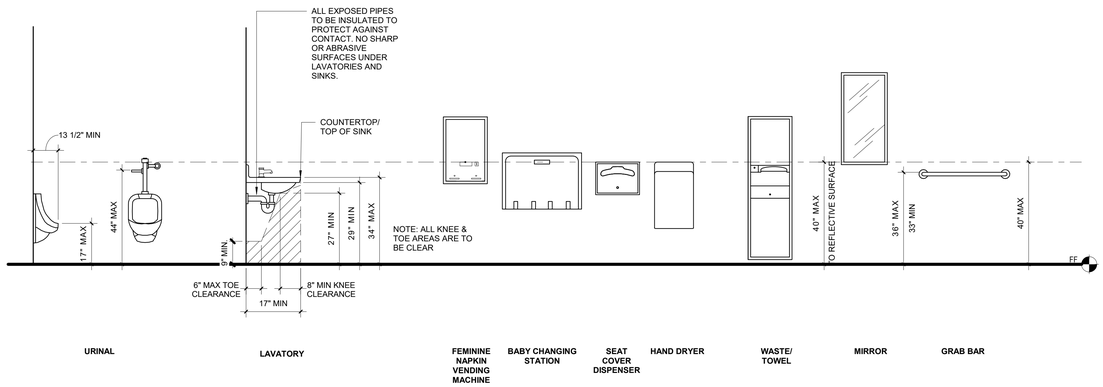

CBC 11B-605.2 CBC 11B-606

ACCESSIBLE MOUNTING HEIGHTS | 1/2" = 1'-0" | 05

GENERAL NOTES

1. ALL DIMENSIONS SHOWN ON THIS SHEET ARE TO FACE OF FINISH, U.N.O.
2. ALL DIMENSIONS AND CLEARANCES SHOWN ON THIS SHEET ARE APPLICABLE THROUGHOUT THE DOCUMENTS WHEREVER THE DESCRIBED CONDITIONS OCCUR AND MAY OR MAY NOT BE SPECIFICALLY REFERENCED.
3. CONTRACTOR IS RESPONSIBLE FOR COMPLYING WITH ALL REQUIRED CLEARANCES.
4. CONSTRACTOR SHALL BRING DISCREPANCIES TO THE IMMEDIATE ATTENTION OF THE ARCHITECT.
5. FLOOR SLOPE AT ALL WHEELCHAIR SPACES TO BE 1:48 MAX. IN ANY DIRECTION.
6. ACCESSIBLE SIGNAGE REQUIREMENTS SEE SHEET A10.10

IDENTIFICATION STAMP
DIV. OF THE STATE ARCHITECT
APP: 02-119490 INC:
REVIEWED FOR
SS ☑ FLS ☑ ACS ☑
DATE: 09/13/2022

LPA
ARCHITECTURE ENGINEERING INTERIORS
LANDSCAPE ARCHITECTURE PLANNING

916-287-2400 Office
916-287-2401 Fax
LPADesignStudios.com
431 I Street,
Suite 107
Sacramento, California 95814

LICENSED ARCHITECT
JIANG W KIN
No. C-33172
Exp. SEN 05-31-23
STATE OF CALIFORNIA

This document and all other project documents, ideas, aesthetics and designs incorporated therein are instruments of service. All project documents are copyright protected, are the property of LPA, Inc. (LPA) and cannot be lawfully used in whole or in part for any project or purpose except as set forth in the contractual agreement between LPA and its Client. The unauthorized disclosure and/or use of the project documents (including the creation of derivative works), may give rise to liability for copyright infringement, unlawful disclosure, use or misappropriation of property rights held by LPA. The unauthorized use of the project documents will give rise to the recovery of monetary losses and damages including attorney fees and costs for which the unauthorized user will be held liable.
Project documents describe the design intent of the work and are not a representation of as-built or existing conditions. LPA is not responsible for any discrepancies between the project documents and the existing conditions.

© LPA, Inc.

DAVIS SR HIGH SCHOOL AQUATICS CENTER
315 W 14TH ST., DAVIS, CA 95616

Developed for
DAVIS JOINT UNIFIED SCHOOL DISTRICT

Revision	Date

Submittal	Date
50% DD REVIEW	06/15/2021
100% DD SUBMITTAL	07/26/2021
50% CD REVIEW	10/08/2021
100% CD DSA SUBMITTAL	10/22/2021
DSA SUBMITTAL	03/24/2022

Job Number	1904413
Date Published	03/24/2022
Checked By	Checker
Scale	As indicated

ACCESSIBILITY DETAILS

G0.81

GENERAL NOTES

1. ALL DIMENSIONS SHOWN ON THIS SHEET ARE TO FACE OF FINISH, U.N.O.
2. ALL DIMENSIONS AND CLEARANCES SHOWN ON THIS SHEET ARE APPLICABLE THROUGHOUT THE DOCUMENTS WHEREVER THE DESCRIBED CONDITIONS OCCUR AND MAY OR MAY NOT BE SPECIFICALLY REFERENCED.
3. CONTRACTOR IS RESPONSIBLE FOR COMPLYING WITH ALL REQUIRED CLEARANCES.
4. CONSTRACTOR SHALL BRING DISCREPANCIES TO THE IMMEDIATE ATTENTION OF THE ARCHITECT.
5. FLOOR SLOPE AT ALL WHEELCHAIR SPACES TO BE 1:48 MAX. IN ANY DIRECTION.
6. ACCESSIBLE SIGNAGE REQUIREMENTS SEE SHEET A10.10

IDENTIFICATION STAMP
DIV. OF THE STATE ARCHITECT
APP: 02-119490 INC:
REVIEWED FOR
SS ☑ FLS ☑ ACS ☑
DATE: 09/13/2022

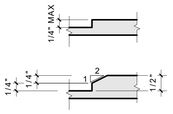

11B-303.2

11B-303.3

CHANGES IN LEVEL | 24

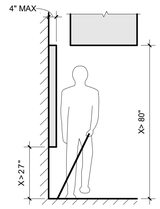

11B-307.2

ACCESSIBLE PATH OF TRAVEL PROTRUDING OBJECT LIMITS | 16

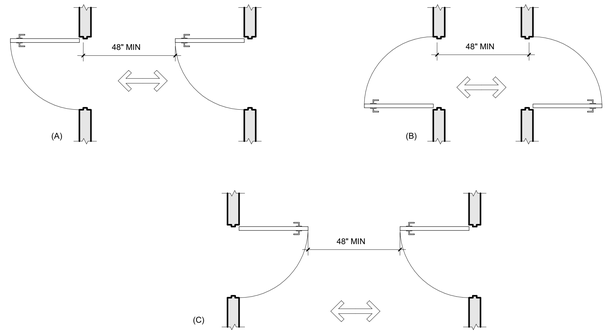

CBC 11B-404.2.6

DOOR CLEARANCES - DOORS IN SERIES | 3/8" = 1'-0" | 08

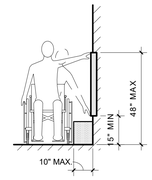

UNOBSTRUCTED SIDE REACH

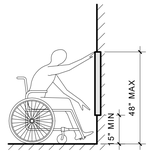

UNOBSTRUCTED FORWARD REACH

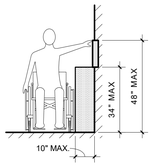

OBSTRUCTED HIGH SIDE REACH

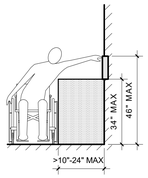

OBSTRUCTED HIGH SIDE REACH

11B-308.3.2

ACCESSIBLE SIDE REACH REQUIREMENTS | 19

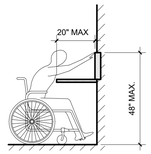

OBSTRUCTED HIGH FORWARD REACH

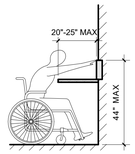

OBSTRUCTED HIGH FORWARD REACH

11B-308.2.2

ACCESSIBLE FORWARD REACH REQUIREMENTS | 15

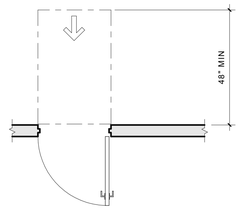

(B)
FRONT APPROACH, PUSH SIDE

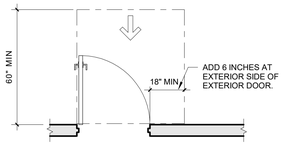

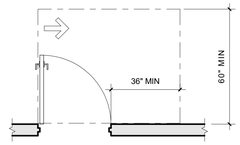

(D)
HINGE APPROACH, PULL SIDE

NOTE: ALIGN CENTER OF ALL WALL SWITCHES & WALL DEVICES @ CENTERLINES U.N.O.

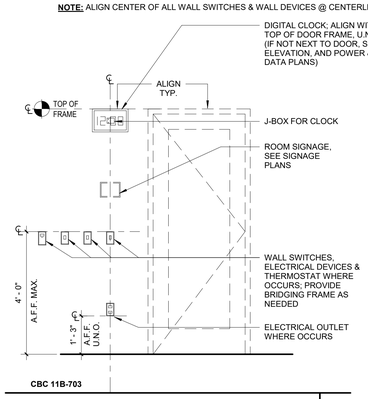

CBC 11B-703

TYPICAL DEVICE INSTALLATION | 18

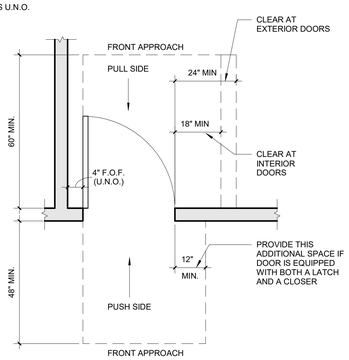

CBC 11B-404

TYPICAL CLEARANCES AT DOOR | 14

(A)
FRONT APPROACH, PULL SIDE

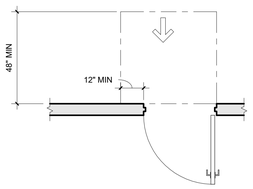

(C)
FRONT APPROACH, PUSH SIDE, DOOR PROVIDED WITH BOTH CLOSER AND LATCH

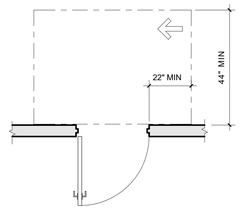

(F)
HINGE APPROACH, PUSH SIDE

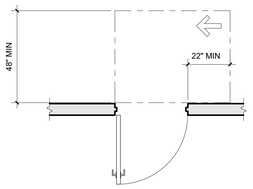

(E)
HINGE APPROACH, PUSH SIDE, DOOR PROVIDED WITH BOTH CLOSER AND LATCH

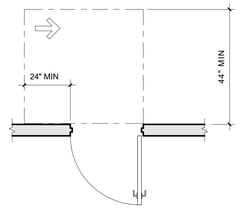

(J)
LATCH APPROACH, PUSH SIDE

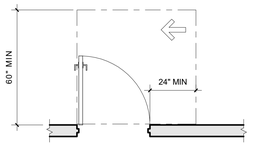

(H)
LATCH APPROACH, PULL SIDE

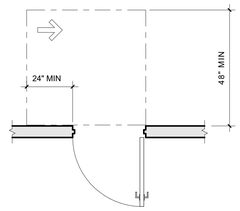

(K)
LATCH APPROACH, PUSH SIDE, DOOR PROVIDED WITH CLOSER

CBC 11B-404.2.4.1

DOOR CLEARANCES | 3/8" = 1'-0" | 05

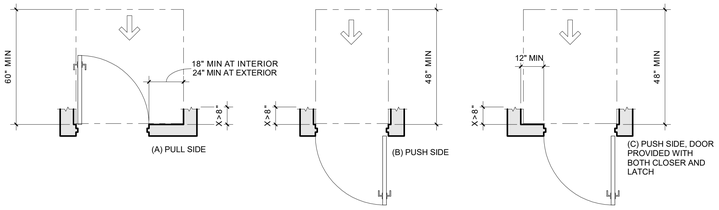

CBC 11B-404.2.4.3

RECESSED DOOR CLEARANCES | 3/8" = 1'-0" | 13

LPA
ARCHITECTURE ENGINEERING INTERIORS
LANDSCAPE ARCHITECTURE PLANNING

916-287-2400 Office
916-287-2401 Fax
LPADesignStudios.com
431 I Street,
Suite 107
Sacramento, California 95814

LICENSED ARCHITECT
ANDREW W. MAY
No. C-33172
REN 05-31-23
STATE OF CALIFORNIA

This document and all other project documents, ideas, aesthetics and designs incorporated therein are instruments of service. All project documents are copyright protected, are the property of LPA, Inc. (LPA) and cannot be lawfully used in whole or in part for any project or purpose except as set forth in the contractual agreement between LPA and its Client. The unauthorized disclosure and/or use of the project documents (including the creation of derivative works), may give rise to liability for copyright infringement, unlawful disclosure, use or misappropriation of property rights held by LPA. The unauthorized use of the project documents will give rise to the recovery of monetary losses and damages including attorney fees and costs for which the unauthorized user will be held liable.
Project documents describe the design intent of the work and are not a representation of as-built or existing conditions. LPA is not responsible for any discrepancies between the project documents and the existing conditions.

© LPA, Inc.

DAVIS SR HIGH SCHOOL
AQUATICS CENTER
315 W 14TH ST., DAVIS, CA 95616

Developed for
DAVIS JOINT UNIFIED SCHOOL DISTRICT

Revision	Date

Submittal	Date
50% DD REVIEW	06/15/2021
100% DD SUBMITTAL	07/26/2021
50% CD REVIEW	10/08/2021
100% CD DSA SUBMITTAL	10/22/2021
DSA SUBMITTAL	03/24/2022

Job Number	1904413
Date Published	03/24/2022
Checked By	Checker
Scale	

ACCESSIBILITY DETAILS

G0.82

ABBREVIATIONS

AB	AGGREGATE BASE	MH	MANHOLE
AC	ASPHALT CONCRETE PAVEMENT	MIN	MINIMUM
AE	ACCESS EASEMENT	MOC	MIDDLE OF CURVATURE
ASPH	ASPHALT PAVING	N	NORTH
BC	BEGIN CURVATURE	NG	NATURAL GRADE
BCR	BEGIN CURB RETURN	NTS	NOT TO SCALE
BFP	BACK FLOW PREVENTER	OC	ON CENTER
BI	BOX INLET	(P)	PROPOSED, NEW
BM	BENCHMARK	PA	PLANTING AREA
BOP	BOTTOM OF PIPE	PBC	PULL BOX CABLE
BOR	BOTTOM OF RAMP	PBE	PULL BOX ELECTRIC
BS	BOTTOM OF STAIRS	PBT	PULL BOX TELEPHONE
BVC	BEGIN VERTICAL CURVATURE	PBW	PULL BOX WATER
BW	BOTTOM OF WALL	PCC	POINT OF COMPOUND CURVATURE
C&G	CURB AND GUTTER	PE	PEDESTRIAN EASEMENT
C/L,CL	CENTER LINE	PI	POINT OF INTERSECTION
CB	CATCH BASIN	PIVC	POINT OF INTERSECTION VERTICAL CURVATURE
CONST	CONSTRUCT		
CR	CURB RETURN	PL	PROPERTY LINE
CT	COURT	POC	POINT OF CONNECTION
CUL	CULVERT	PP	POWER POLE
DI	DROP INLET	PRC	POINT OF REVERSE CURVATURE
DIP	DUCTILE IRON PIPE	PVC	POLYVINYL CHLORIDE
DW	DOMESTIC WATER	PVMT	PAVEMENT
D/W	DRIVEWAY	R	RADIUS
SDMH	STORM DRAIN MANHOLE	RCP	REINFORCED CONCRETE PIPE
DE	DRAINAGE EASEMENT	RIM	TOP RIM OF STRUCTURE
DR	DRIVE	ROW	HIGHWAY EASEMENT
(E)	EXISTING	RT	RIGHT
E	EAST	RW	RECLAIMED WATER
EC	END CURVATURE	R/W	RIGHT OF WAY
ECR	END CURB RETURN	S	SOUTH OR SLOPE
EG	EXISTING GRADE	SBE	SETBACK EASEMENT
ELEV	ELEVATION	SCO	SANITARY SEWER CLEANOUT
EOC	EDGE OF CONCRETE	SD	STORM DRAIN
EP	EDGE OF PAVEMENT	SF	SQUARE FEET
ESMT	EASEMENT	SHT	SHEET
EVC	END OF VERTICAL CURVATURE	STA	STATION
FF	FINISHED FLOOR	SMH	SANITARY SEWER MANHOLE
FFE	FINISHED FLOOR ELEVATION	SWPPP	STORM WATER POLLUTION PREVENTION PLAN
FG	FINISHED GRADE		
FH	FIRE HYDRANT	S/W	SIDEWALK
FL	FLOWLINE	T	TANGENT
FS	FINISHED SURFACE	TB	TOP OF BERM
FW	FIRE PROTECTION SERVICE WATER	TBC	TOP BACK OF CURB
GB	GRADE BREAK	TBW	TOP BACK OF WALK
GFL	GUTTER FLOWLINE	TC	TOP OF CURB
GSL	LIMITS OF GRAVITY SEWER	TG	TOP OF GRATE
GR	GRATE	TOE	TOE OF SLOPE
GV	GAS VALVE	TOP	TOP OF PIPE
HB	HOSE BIB	TOR	TOP OF RAMP
HP	HIGH POINT	TOS	TOP OF SLOPE
ICV	IRRIGATION CONTROL VALVE	TP	TOP OF PLANTER
INTX	POINT OF INTERSECTION	TS	TOP OF STAIRS
INV	INVERT	TW	TOP OF WALL
JP	JOINT POLE	TYP	TYPICAL
LE	LANDSCAPE EASEMENT	TP	TELEPHONE POLE
LF	LINEAR FEET	VC	VERTICAL CURVATURE
LIP	LIP OF GUTTER	W	WEST
LP	LOW POINT	WM	WATER MAIN
LT	LEFT	WV	WATER VALVE
MAX	MAXIMUM		

LEGEND

SYMBOL	DESCRIPTION
RD	ROOF DRAIN P.O.C 5' FROM BUILDING
G	GAS P.O.C 5' FROM BUILDING
F	FIRE WATER P.O.C 5' FROM BUILDING
W	DOMESTIC WATER P.O.C 5' FROM BUILDING
SS	SANITARY SEWER P.O.C 5' FROM BUILDING
D	STORM DRAIN MANHOLE
S	SANITARY SEWER MANHOLE
	DRAIN INLET
AD	AREA DRAIN
	TRENCH DRAIN
	CLEANOUT
	BLOW OFF
	FIRE HYDRANT
	VALVE
	POST INDICATOR VALVE (PIV)/CHECK VALVE (CHK VLV)/FIRE DEPARTMENT CONNECTION (FDC)
	CHECK VALVE (CHK VLV)
	FIRE DEPARTMENT CONNECTION (FDC)
	DOUBLE DETECTOR CHECK (DBL CHK)
	REDUCED PRESSURE (BFP)
	POST INDICATOR VALVE (PIV)
	THRUST BLOCK
	BENDS, TEE AND CROSS
	WATER METER

LINE TYPE	DESCRIPTION
	APPROXIMATE PROJECT LIMITS
	RIGHT OF WAY/ PROPERTY LINE
	FENCE
	REMOVE EXISTING UTILITY
S	EXISTING SEWER LINE
W	EXISTING WATER LINE
SD	EXISTING STORM DRAIN LINE
FW	EXISTING DEDICATED PRIVATE FIRE SERVICE
G	EXISTING NATURAL GAS SERVICE
E	EXISTING ELECTRICAL LINE / CONDUIT
T	EXISTING TELECOMMUNICATIONS LINE / CONDUIT
XXLF X"SS S=X.XXX	SANITARY SEWER LINE
XXLF X"DW PVC	DOMESTIC WATER LINE
XXLF X"SD S=X.XXX	STORM DRAIN LINE (≤8" DIAMETER)
XXLF X"SD S=X.XXX	STORM DRAIN LINE (>8" DIAMETER)
	PERFORATED STORM DRAIN LINE
XXLF X"FW PVC	DEDICATED PRIVATE FIRE SERVICE
XXLF GAS PVC	NATURAL GAS LINE
GB	GRADE BREAK LINE
	FLOW LINE
	DAYLIGHT LINE

GENERAL EROSION AND SEDIMENT CONTROL NOTES

1. CONTRACTOR SHALL ENSURE THAT THE CONSTRUCTION SITE IS PREPARED PRIOR TO THE START OF CONSTRUCTION. CONTRACTOR SHALL HAVE ALL EROSION AND SEDIMENT CONTROL MEASURES IN PLACE AT ALL TIMES DURING CONSTRUCTION.
2. ALL EROSION AND SEDIMENT CONTROL MEASURES SHALL BE MAINTAINED UNTIL DISTURBED AREAS ARE STABILIZED.
3. THIS PLAN MAY NOT COVER ALL THE SITUATIONS THAT ARISE DURING CONSTRUCTION DUE TO UNANTICIPATED FIELD CONDITIONS.
4. ALL EROSION AND SEDIMENT CONTROL MEASURES SHALL BE CHECKED BEFORE AND AFTER ALL STORMS TO ENSURE MEASURES ARE FUNCTIONING PROPERLY.
5. CONTRACTOR SHALL MAINTAIN A LOG AT THE SITE OF ALL INSPECTIONS OR MAINTENANCE OF BMPS, AS WELL AS, ANY CORRECTIVE CHANGES TO THE BMPS OR EROSION AND SEDIMENT CONTROL PLAN.
6. IN AREAS WHERE SOIL IS EXPOSED, PROMPT REPLANTING WITH NATIVE COMPATIBLE, DROUGHT-RESISTANT VEGETATION SHALL BE PERFORMED. NO AREAS WILL BE LEFT EXPOSED OVER THE WINTER SEASON.
7. THE CONTRACTOR SHALL INSTALL THE STABILIZED CONSTRUCTION ENTRANCE PRIOR TO COMMENCEMENT OF GRADING. LOCATION OF THE ENTRANCE MAY BE ADJUSTED BY THE CONTRACTOR TO FACILITATE GRADING OPERATIONS. ALL CONSTRUCTION TRAFFIC ENTERING THE PAVED ROAD MUST CROSS THE STABILIZED CONSTRUCTION ENTRANCE.
8. ALL SEDIMENT DEPOSITED ON PAVED ROADWAYS SHALL BE SWEPT AT THE END OF EACH WORKING DAY OR MORE OFTEN AS NECESSARY.
9. CONTRACTOR SHALL PLACE GRAVEL/SAND BAGS AROUND ALL NEW DRAINAGE STRUCTURE OPENINGS IMMEDIATELY AFTER THE STRUCTURE OPENING IS CONSTRUCTED. THESE GRAVEL/SAND BAGS SHALL BE MAINTAINED AND REMAIN IN PLACE UNTIL CONSTRUCTION IS COMPLETED.
10. CONTRACTOR SHALL IMPLEMENT HOUSEKEEPING PRACTICES AS FOLLOWS:
    - A. SOLID WASTE MANAGEMENT:
      PROVIDE DESIGNATED WASTE COLLECTION AREAS AND CONTAINERS. ARRANGE FOR REGULAR REMOVAL AND DISPOSAL. CLEAR SITE OF TRASH INCLUDING ORGANIC DEBRIS, PACKAGING MATERIALS, SCRAP OR SURPLUS BUILDING MATERIALS AND DOMESTIC WASTE DAILY.
    - B. MATERIAL DELIVERY AND STORAGE:
      PROVIDE A DESIGNATED MATERIAL STORAGE AREA WITH SECONDARY CONTAINMENT SUCH AS BERMING. STORE MATERIAL ON PALLETS AND PROVIDE COVERING FOR SOLUBLE MATERIALS. RELOCATE STORAGE AREA INTO BUILDING SHELL WHEN POSSIBLE. INSPECT AREA WEEKLY.
    - C. CONCRETE WASTE:
      PROVIDE A DESIGNATED AREA FOR A TEMPORARY PIT TO BE USED FOR CONCRETE TRUCK WASH-OUT. CONCRETE WASHOUT CANNOT BE WITHIN 50' MINIMUM OF DRAIN INLETS. DISPOSE OF HARDENED CONCRETE OFFSITE. AT NO TIME SHALL A CONCRETE TRUCK DUMP ITS WASTE AND CLEAN ITS TRUCK INTO THE STORM DRAINS VIA CURB AND GUTTER. INSPECT DAILY TO CONTROL RUNOFF, AND WEEKLY FOR REMOVAL OF HARDENED CONCRETE.
    - D. PAINT AND PAINTING SUPPLIES:
      PROVIDE INSTRUCTION TO EMPLOYEES AND SUBCONTRACTORS REGARDING REDUCTION OF POLLUTANTS INCLUDING MATERIAL STORAGE, USE, AND CLEAN UP. INSPECT SITE WEEKLY FOR EVIDENCE OF IMPROPER DISPOSAL.
    - E. VEHICLE FUELING, MAINTENANCE AND CLEANING:
      PROVIDE A DESIGNATED FUELING AREA WITH SECONDARY CONTAINMENT SUCH AS BERMING. DO NOT ALLOW MOBILE FUELING OF EQUIPMENT. PROVIDE EQUIPMENT WITH DRIP PANS. RESTRICT ONSITE MAINTENANCE AND CLEANING OF EQUIPMENT TO A MINIMUM. INSPECT AREA WEEKLY.
    - F. HAZARDOUS WASTE MANAGEMENT:
      PREVENT THE DISCHARGE OF POLLUTANTS FROM HAZARDOUS WASTES TO THE DRAINAGE SYSTEM THROUGH PROPER MATERIAL USE, WASTE DISPOSAL AND TRAINING OF EMPLOYEES. HAZARDOUS WASTE PRODUCTS COMMONLY FOUND ON-SITE INCLUDE BUT ARE NOT LIMITED TO PAINTS & SOLVENTS, PETROLEUM PRODUCTS, FERTILIZERS, HERBICIDES & PESTICIDES, SOIL STABILIZERS, STABILIZATION PRODUCTS, ASPHALT PRODUCTS AND CONCRETE CURING PRODUCTS.
11. CONTRACTOR SHALL HYDROSEED ALL GRADED SLOPES. NATIVE SEED MIX SHALL BE 20% LANA PUBESCENT WHEAT GRASS, 40% BLANDO BROME, AND 40% ANNUAL RYE GRASS AND SHALL BE APPLIED AT A RATE OF 200 POUNDS PER ACRE. SOIL BINDING AGENT SHALL BE VERDYOL, SENTINEL, OR EQUAL, APPLIED AT A RATE OF 110 POUNDS PER ACRE. MULCH SHALL BE SILVER-FIBER, CONWED, OR EQUAL, APPLIED AT A RATE OF 1,000 POUNDS PER ACRE. FERTILIZER SHALL BE AGRI-FORM 16-7-12, BEST 16-6-8, OR EQUAL, APPLIED AT A RATE OF 500 POUNDS PER ACRE. THE CONTRACTOR SHALL WATER SEEDED AREAS OR RESEED AS NECESSARY TO ENSURE SUFFICIENT PLANT DEVELOPMENT FOR EROSION CONTROL.
12. NO GRADING SHALL BE DONE UNTIL SITE- AND SEASON-SPECIFIC SOIL LOSS AND HOUSEKEEPING STORMWATER BMPs HAVE BEEN APPROVED BY THE INSPECTOR. THE CONTRACTOR SHOULD EMPLOY THE DESIGN BMPs AND ANY OTHERS NEEDED AS SITUATIONS ARISE. CONTRACTOR SHOULD CONDUCT SITE INSPECTIONS BEFORE, DURING AND AFTER EACH EXTENDED STORM EVENT TO IDENTIFY CONDITIONS THAT MAY CONTRIBUTE TO EROSION AND SEDIMENT PROBLEMS OR ANY OTHER POLLUTANT DISCHARGES. IF ADDITIONAL CONTROL MEASURES ARE NEEDED, CONTRACTOR SHOULD IMPLEMENT THEM IMMEDIATELY.

POLLUTION PREVENTION NOTES

IN ORDER TO MEET THE REQUIREMENTS OF THE NATIONAL POLLUTANT DISCHARGE ELIMINATION SYSTEM (NPDES) PROGRAM FOR CONSTRUCTION, CONSTRUCTION CONTRACTORS SHALL INSTALL AND MAINTAIN APPROPRIATE BEST MANAGEMENT PRACTICES (BMPS), AS SHOWN IN THE EROSION CONTROL PLAN AND IN ACCORDANCE WITH THE SWPPP (STORM WATER POLLUTION PREVENTION PLAN), ON ALL CONSTRUCTION PROJECTS. BMPS SHALL BE INSTALLED IN ACCORDANCE WITH INDUSTRY RECOMMENDED STANDARDS, AND/OR IN ACCORDANCE WITH ANY GENERAL CONSTRUCTION PERMIT ISSUED BY THE STATE FOR THE PROJECT TO PREVENT ANY DISCHARGES FROM THE PROJECT SITE OR INTO ANY STORM DRAIN FACILITIES. ALL SEDIMENTS, CONSTRUCTION MATERIALS, DEBRIS AND WASTES, AND OTHER POLLUTANTS MUST BE RETAINED ON SITE AND MAY NOT BE TRANSPORTED FROM THE SITE VIA SHEET FLOW, SWALES, AREA DRAINS, NATURAL DRAINAGE COURSES, WIND, OR VEHICLE TRACKING. UNDER DIRECTION OF THE ENGINEER OF RECORD, EROSION AND/OR SEDIMENT CONTROL DEVICES SHALL BE MODIFIED AS NEEDED AS THE PROJECT PROGRESSES TO ENSURE EFFECTIVENESS.

BMP MAINTENANCE NOTES

1. FOLLOWING OWNER ACCEPTANCE OF CONSTRUCTION WORK, POST CONSTRUCTION BEST MANAGEMENT PRACTICE (BMP) MEASURES SHALL BE MAINTAINED BY THE PROPERTY OWNER, INCLUDING BUT NOT LIMITED TO:
   - 1.1. ANNUAL INSPECTION, REPLACEMENT, AND/OR SEDIMENTATION REMOVAL OF VEGETATED SWALES, TREATMENT PONDS, AND OTHER SURFACE STORMWATER TREATMENT MEASURES AS REQUIRED WITH AN INCREASED FREQUENCY BASED ON SITE CONDITIONS.
   - 1.2. MAINTENANCE SERVICE AGREEMENT(S) OF STORMWATER TREATMENT VAULTS, INLETS, MANHOLES, AND OTHER DEVICES BASED ON MANUFACTURES' RECOMMENDATIONS AND FREQUENCY.
   - 1.3. ANNUAL INSPECTION OF PERMEABLE PAVEMENT AND REMOVAL OF SEDIMENT AS NEEDED.
   - 1.4. ANNUAL INSPECTION OF STORMWATER INLETS AND MAINTENANCE AS REQUIRED TO CLEAR GRATES AND INLETS OF DEBRIS.
   - 1.5. THE PROJECT STORMWATER POLLUTION PREVENTION PLAN (SWPPP) AND WATER QUALITY MANAGEMENT PLAN (WQMP) MAY CONTAIN ADDITIONAL OR MORE STRINGENT MAINTENANCE REQUIREMENTS.
2. BMP DETAILS MAY BE FOUND IN APPENDIX H OF THE PROJECT SWPPP DOCUMENT. BMP DETAILS PER CALIFORNIA STORMWATER QUALITY ASSOCIATION (CASQA) AND ARE AVAILABLE AT www.casqa.org.
3. FOR PROJECTS GREATER THAN 1 ACRE: THE CONTRACTOR SHALL VERIFY THE STATUS OF THE SWPPP/NOI/WDID PRIOR TO EARTHMOVING ACTIVITIES. A STORMWATER POLLUTION PREVENTION PLAN (SWPPP) SHALL BE PREPARED AND A NOTICE OF INTENT (NOI) SHALL BE FILED WITH THE STATE WATER RESOURCES CONTROL BOARD (SWRCB) IN ACCORDANCE WITH THE REQUIREMENTS OF CALIFORNIA GENERAL PERMIT FOR STORMWATER DISCHARGES ASSOCIATED WITH CONSTRUCTION ACTIVITY (PERMIT NO. CAS000002) FOR ALL OPERATIONS ASSOCIATED WITH THESE PLANS. THE CONTRACTOR SHALL KEEP A COPY OF THE SWPPP ON SITE AND AVAILABLE FOR REVIEW.

AREA SUMMARY

TOTAL DISTURBED AREA = 60,630 SF (1.39± ACRES)

DEMOLITION NOTES

1. THE INTENT OF THE DEMOLITION PLAN IS TO DESCRIBE IN GENERAL THE DEMOLITION AREAS AFFECTED BY THE PROJECT CONSTRUCTION. IT IS NOT INTENDED AS A DETAILED DESCRIPTION OF EXISTING ITEMS OR ELEMENTS TO BE REMOVED. THE CONTRACTOR SHALL VISIT THE SITE AND REVIEW ANY AVAILABLE RECORD DOCUMENTS TO BECOME FAMILIAR WITH THE EXISTING CONDITIONS AND SHOULD INCLUDE THE REMOVAL OF ALL ITEMS NECESSARY FOR THE PROPER EXECUTION AND COMPLETION OF THE WORK. THE CONTRACT DOCUMENTS ARE COMPLEMENTARY, AND WHAT IS REQUIRED BY ONE SHALL BE BINDING AS IF REQUIRED BY ALL TO THE EXTENT THAT IT IS REASONABLY INFERABLE FROM THEM AS BEING NECESSARY TO PRODUCE THE INTENDED RESULTS.
2. REMOVE EXISTING BUILDINGS, FOUNDATIONS AND SERVICE UTILITIES AS INDICATED ON PLANS. CAP ALL UTILITIES AT APPROPRIATE POINTS. ALL EXISTING ELECTRICAL / TELEPHONE / CATV UTILITIES SHALL BE REMOVED AS INDICATED OR BACK TO THE POINT WHERE THE SPECIFIC UTILITY SYSTEM ENTERS THE WORK AREA. COORDINATE DEMOLITION OF ALL UTILITIES WITH THE OWNER. ALL UTILITIES CONNECTED TO EXISTING BUILDINGS TO REMAIN SHALL CONTINUE TO BE OPERATIONAL DURING THE DEMOLITION PROCESS. DOMESTIC AND FIRE SERVICE WATER AND NATURAL GAS SHALL BE REMOVED TO A POINT OUTSIDE THE PERIMETER OF PROPOSED NEW CONSTRUCTION TO EXISTING VALVES OR SIMILAR SHUT-OFF DEVICES. IF A SHUT-OFF DEVICE IS NOT REASONABLY ADJACENT TO THE PERIMETER OF THE PROPOSED NEW CONSTRUCTION, PROVIDE A SHUT-OFF DEVICE IN BELOW-GRADE YARD BOX. CONFIRM LOCATION OF NEW DEVICES WITH OWNER PRIOR TO INSTALLATION. SANITARY SEWER AND STORM DRAINAGE SHALL BE CAPPED TO A POINT OUTSIDE THE PERIMETER OF THE PROPOSED NEW CONSTRUCTION. OTHER UTILITIES NOT SPECIFICALLY IDENTIFIED IN THESE DOCUMENTS AND NOT ANTICIPATED FOR REUSE SHALL BE REMOVED IN ENTIRETY.
3. FOR ALL EXISTING MATERIALS THAT CAN BE SALVAGED, OWNER HAS FIRST RIGHT OF REFUSAL FOR REMOVED ITEMS THAT MAY HAVE RESIDUAL COMMERCIAL OR HISTORIC VALUE INCLUDING HARDWARE, GLASS, CORNER STONES, TIME CAPSULES, LIGHT STANDARDS, SIGNS, FENCING, BENCHES, WATER FOUNTAINS, TRASH CONTAINERS, ETC. SHALL REMAIN AS PROPERTY OF THE OWNER. ALL ITEMS TO BE SALVAGED FOR REUSE/REINSTALLATION MUST MEET CURRENT CODE REQUIREMENTS. COORDINATE ITEMS TO BE RETAINED WITH OWNER AND REMOVE FROM CONSTRUCTION SITE TO A LOCATION APPROVED BY OWNER. REMOVED MATERIALS, NOT INDICATED OR DIRECTED TO BE SALVAGED FOR THE OWNER'S BENEFIT ARE DEBRIS AND BECOME THE CONTRACTOR'S PROPERTY UPON REMOVAL.
4. THE EXISTENCE AND LOCATION OF ANY UNDERGROUND UTILITY PIPES OR STRUCTURES SHOWN ON THESE PLANS ARE OBTAINED BY SEARCH OF THE AVAILABLE RECORDS AND FIELD SURVEYS. THE CONTRACTOR SHALL CONTACT UNDERGROUND SERVICE ALERT, UTILITY COMPANIES, AND/OR FIELD VERIFY AND LOCATE ALL UTILITIES BEFORE PROCEEDING WITH WORK. THE CONTRACTOR IS ALSO REQUIRED TO TAKE DUE PRECAUTIONARY MEASURES TO PROTECT THE UTILITY LINES SHOWN AND ANY OTHER LINES NOT OF RECORD OR NOT SHOWN ON THESE PLANS. NOTIFY THE ENGINEER IF ADDITIONAL UTILITIES ARE LOCATED OR IF CONFLICTS ARE FOUND WITH EXISTING CONDITIONS.
5. ALL TREES TO BE REMOVED SHALL BE MARKED BY CONTRACTOR AND APPROVED FOR REMOVAL BY THE OWNER OR OWNER'S REPRESENTATIVE PRIOR TO REMOVING OR CUTTING TREE(S). EXISTING ROOTS SHALL BE GRINDED TO A DEPTH OF APPROXIMATELY 3-FEET. USE CAUTION WHILE GRINDING WHEN EXISTING UTILITIES ARE IN CLOSE PROXIMITY TO TREES. ALL TREES TO REMAIN WITHIN THE LIMIT OF WORK SHALL BE PROTECTED AND MAINTAINED PER SPECIFICATIONS AND DETAILS.
6. SAWCUT EXISTING CONCRETE AND ASPHALT TO AN EXISTING CONTROL JOINT WHERE POSSIBLE, AT MINIMUM TO A NEAT-STRAIGHT LINE. ALL DEBRIS SHALL BE HAULED OFFSITE TO A LEGAL DUMPING SITE OR SALVAGED FOR REUSE ON PROJECT AS NOTED.
7. WORK WITHIN CITY, COUNTY, OR STATE RIGHT-OF-WAY REQUIRES A SEPARATE ENCROACHMENT PERMIT WHICH THE CONTRACTOR IS RESPONSIBLE FOR OBTAINING PRIOR TO STARTING WORK WITHIN RIGHT-OF-WAY.
8. CONTRACTOR TO COORDINATE UTILITY DEMOLITION WITH DRAINAGE AND UTILITY WORK SHOWN IN THIS PLAN SET. ALL UTILITY SHUTDOWNS SHALL BE COORDINATED PER PROJECT SPECIFICATIONS.
9. EXISTING DRY UTILITIES SHOWN FOR DEMOLITION ARE SHOWN FOR COORDINATION ONLY. REFER TO OTHER DISCIPLINES FOR LIMITS AND DETAILS OF DEMOLITION.
10. THE CONTRACTOR SHALL RECYCLE CONSTRUCTION DEBRIS, ASPHALT, AND CONCRETE GENERATED FROM REMOVALS REQUIRED TO CONSTRUCT THE PROJECT. THE CONTRACTOR IS OBLIGATED, UNDER THIS CONTRACT, TO RECYCLE THE WASTE MATERIAL THROUGH AN APPROVED RECYCLING PLANT.
11. A LIST OF FACILITIES THAT ACCEPT CONSTRUCTION & DEMOLITION DEBRIS CAN BE FOUND ON THE CALRECYCLE WEBSITE AT: HTTPS://WWW.CALRECYCLE.CA.GOV/CONDEMO
12. CONTRACTOR IS RESPONSIBLE FOR PROTECTING EXISTING BUILDING FINISHES DURING DEMOLITION. ANY FINISH THAT IS DAMAGED DURING DEMOLITION SHALL BE REPAIRED OR REPLACED IN-KIND OR BETTER.

GENERAL NOTES TO CONTRACTOR

1. THE CONTRACTOR SHALL CONTACT THE RESPECTIVE UTILITY OWNERS FOR LOCATION, REMOVAL, AND/OR RELOCATION OF ANY UTILITY SERVICES AFFECTED BY CONSTRUCTION. THE CONTRACTOR SHALL TAKE ALL NECESSARY PRECAUTIONARY MEASURES TO PROTECT UNDERGROUND OR OVERHEAD STRUCTURES WHETHER OR NOT THEY ARE SHOWN ON THESE DRAWINGS.
2. THE CONTRACTOR SHALL NOTIFY THE PROJECT INSPECTOR AND THE RESPECTIVE UTILITY OWNERS AND OTHER AGENCIES AT LEAST TWO WORKING DAYS PRIOR TO START OF CONSTRUCTION.
3. THE CONTRACTOR SHALL BE RESPONSIBLE FOR EXPOSING, VERIFYING LOCATIONS (BOTH HORIZONTAL AND VERTICAL), AND MAINTAINING ALL EXISTING UNDERGROUND UTILITIES, BOTH SHOWN ON THE PLANS AND/OR NOT SHOWN ON THE PLANS DURING CONSTRUCTION. REPAIR DAMAGED UTILITIES TO THE SATISFACTION OF THE ENGINEER. THE CONTRACTOR SHALL LOCATE EXISTING UNDERGROUND UTILITIES SUFFICIENTLY AHEAD OF CONSTRUCTION TO PERMIT REVISIONS TO PLANS BECAUSE OF LOCATIONS OF EXISTING FACILITIES AND SHALL REPORT ALL DISCREPANCIES TO THE ENGINEER PRIOR TO THE COMMENCEMENT OF WORK.
4. THE EXISTENCE AND LOCATION OF ANY UNDERGROUND UTILITIES AND/OR STRUCTURES SHOWN ON THESE PLANS WERE OBTAINED BY A SEARCH OF THE AVAILABLE RECORDS. APPROVAL OF THESE PLANS DOES NOT CONSTITUTE A REPRESENTATION AS TO THE ACCURACY OR COMPLETENESS OF THE LOCATION OR THE EXISTENCE, OR NON-EXISTENCE OF ANY UTILITY AND/OR STRUCTURE WITHIN THE LIMITS OF THIS PROJECT. THE CONTRACTOR IS REQUIRED TO TAKE ALL DUE PRECAUTIONARY MEASURES TO PROTECT THE UTILITIES OF RECORD AND/OR NOT OF RECORD SHOWN OR NOT SHOWN AND ANY OTHER LINE(S) OR STRUCTURE(S) NOT SHOWN ON THESE PLANS. THE CONTRACTOR IS RESPONSIBLE FOR THE PROTECTION OF, AND/OR DAMAGE TO THESE LINE(S) AND/OR STRUCTURE(S).
5. THE CONTRACTOR SHALL BE RESPONSIBLE FOR TEMPORARY SHORING AT PROPOSED BUILDING FOUNDATIONS, FOOTINGS, AND WALLS TO PROTECT EXISTING UTILITIES IN PLACE. CONTRACTOR SHALL ALSO BE RESPONSIBLE FOR TEMPORARY SHORING TO PROTECT EXISTING BUILDING FOUNDATIONS, FOOTINGS AND WALLS DURING DEMOLITION / REMOVAL OF EXISTING IMPROVEMENTS, AND/OR CONSTRUCTION OF PROPOSED IMPROVEMENTS (AS REQUIRED).
6. UNAUTHORIZED CHANGES AND USES - CAUTION: THE ENGINEER PREPARING THESE PLANS WILL NOT BE RESPONSIBLE FOR, OR LIABLE FOR, UNAUTHORIZED CHANGES TO OR USES OF THESE PLANS. ALL CHANGES TO THE PLANS MUST BE IN WRITING AND MUST BE APPROVED BY THE PREPARER OF THESE PLANS.
7. THE CONTRACTOR SHALL MAINTAIN THE EXISTING ACCESSIBLE ROUTE CLEAR OR PROVIDE AN ALTERNATE ACCESSIBLE ROUTE OF TRAVEL DURING DEMOLITION AND/OR CONSTRUCTION.
8. THE CONTRACTOR SHALL MAINTAIN THE EXISTING FIRE EXITS AND STAIRS CLEAR AND USABLE OR PROVIDE ALTERNATE FIRE EXITS DURING DEMOLITION AND/OR CONSTRUCTION.

EARTHWORK NOTES

1. IT IS THE CONTRACTOR'S RESPONSIBILITY TO REVIEW THE GRADING PLANS AND SOILS REPORT THOROUGHLY PRIOR TO SITE MOBILIZATION. IT IS ALSO THE GRADING CONTRACTOR'S RESPONSIBILITY TO NOTIFY THE CIVIL AND SOILS ENGINEERS IF ONSITE DISCREPANCIES ARE OBSERVED THAT WOULD AFFECT THE EARTHWORK QUANTITIES.
2. THE EXISTING TOPOGRAPHY AS DELINEATED ON THESE DRAWINGS SHALL BE UTILIZED AS THE BASIS FOR ALL EARTHWORK COMPUTATIONS. SAID TOPOGRAPHY SHALL BE PRESUMED TO BE ACCEPTABLE TO ALL INTERESTED PARTIES UNLESS A DEVIATION IS FOUND PRIOR TO THE START OF GRADING IN ANY SPECIFIC AREAS. ANY DEVIATION SO DETERMINED SHALL BE PROMPTLY TRANSMITTED TO ALL INTERESTED PARTIES.
3. THE CONTRACTOR IS REQUIRED TO ESTIMATE THE QUANTITIES OF GRADING WORK TO BE DONE AND INCLUDE ALL COSTS THEREFROM WITH HIS BID, AS NO ADDITIONAL ALLOWANCE WILL BE MADE WITHOUT PRIOR CONSENT FROM THE OWNER.
4. OVER-EXCAVATION AND/OR EXCESS BACKFILLING OR DUPLICATION OF GRADING ACTIVITIES IS NOT A BASIS FOR ADDITIONAL COMPENSATION. THIS ALSO APPLIES WHERE MATERIAL IS TO BE REMOVED AND REPLACED TO REDUCE MOISTURE CONTENT.
5. OFF-SITE DISPOSAL OF EXCAVATION MATERIAL IS THE RESPONSIBILITY OF THE CONTRACTOR AND SHALL BE INCLUDED IN THE BID. THE CONTRACTOR SHALL HOLD THE OWNER AND ENGINEER HARMLESS AS A RESULT OF ANY CLAIMS ARISING FROM THE ACTIONS ENROUTE OR AWAY FROM THE SITE.
6. EARTH VOLUMES SHOWN HEREON ARE ESTIMATES BASED UPON THE GEOTECHNICAL ANALYSIS PERFORMED BY THE NAMED SOILS ENGINEER AND TOPOGRAPHIC SURVEY OF THE EXISTING GROUND SURFACE AT THE TIME OF PLAN PREPARATION. EARTHWORK VOLUMES ARE COMPUTED BY METHODS COMMONLY USED IN STANDARD ENGINEERING PRACTICE, AND ARE INTENDED FOR USE IN ESTABLISHING GOVERNING AGENCY FEES. ACTUAL FIELD CONDITIONS MAY VARY FROM OBSERVED OR MEASURED CONDITIONS AT THE TIME OF PLAN PREPARATION. EARTHWORK QUANTITIES MAY VARY AS A RESULT.
7. ANY EXPORT OR IMPORT REQUIRED TO BALANCE THE SITE SHALL BE THE SOLE RESPONSIBILITY OF THE CONTRACTOR.
8. PAVEMENT AND SUBGRADE RECOMMENDATIONS RELATED TO OVER-EXCAVATION, PAVEMENT SUBGRADE, ETC., PER GEOTECHNICAL REPORT.

GEOTECHNICAL INFORMATION

FOR SITE PREPARATION, OVEREXCAVATION, FOUNDATION RECOMMENDATIONS, PAVEMENT, SUBGRADE, AND GRADATION REQUIREMENTS SEE GEOTECHNICAL INVESTIGATION REPORT ENTITLED:

"GEOTECHNICAL ENGINEERING AND GEOLOGIC HAZARDS INVESTIGATION DAVIS SENIOR HIGH SCHOOL AQUATICS PROJECT"

PREPARED BY: WALLACE KUHL AND ASSOCIATES
3050 INDUSTRIAL BOULEVARD
WEST SACRAMENTO, CA 95691
(916) 372-1434 PHONE
(916) 372-2656 FAX

PROJECT NO: 13012.01P

DATED: FEBRUARY 17, 2021

EARTHWORK QUANTITIES

APPROXIMATE CUT: 4,470 CY

APPROXIMATE FILL: 130 CY

NOTE:
EARTHWORK QUANTITIES INDICATED ARE FOR REFERENCE ONLY (NOT FOR BID OR PAYMENT). THE CONTRACTOR IS RESPONSIBLE FOR ACTUAL QUANTITIES.

HAUL ROUTE TO BE DETERMINED AT PRE-GRADE MEETING AND ALL NECESSARY PERMITS SHALL BE OBTAINED BY THE GENERAL CONTRACTOR

BASIS OF BEARINGS

HELD FOUND BCM IN WELL AT INTERSECTION OF SCRIPPS DRIVE AND OAK AVENUE TO HELD FOUND BCM IN WELL AT INTERSECTION OF E. 14TH STREET AND OAK AVENUE PER P.M. BK 1 PG 24. N00°20'00"W

FIRE PROTECTION SYSTEM NOTES

1. PRIOR TO INSTALLATION, ALL PLANS AND SPECIFICATIONS SHALL BE APPROVED BY GOVERNING AGENCY.
2. INSPECTIONS ARE REQUIRED: 1) PRIOR TO POURING THRUST BLOCKS, 2) FOR HYDROSTATIC TESTING, AND 3) FOR FLUSH.
3. INSTALLATION, INSPECTION, AND TESTING SHALL CONFORM TO 2016 NFPA 13 AND 2016 NFPA 24.
4. PRIVATE FIRE HYDRANTS SHALL BE APPROVED WET BARREL STYLE WITH A MINIMUM OF ONE 2½" AND ONE 4" OUTLET. THE 4" OUTLET SHALL FACE THE FIRE DEPARTMENT ACCESS ROAD. ALL OUTLETS SHALL BE PROVIDED WITH NATIONAL STANDARD THREADS (NST).
5. FIRE HYDRANT SUPPLY PIPING SHALL BE A MINIMUM OF SIX INCHES IN DIAMETER. THE LOWEST OPERATING NUT SHALL BE MINIMUM OF 18" ABOVE GRADE AND THE FIRE HYDRANT FLANGE SHALL BE A MINIMUM OF 2" ABOVE GRADE.
6. FIRE HYDRANTS SHALL BE A MINIMUM OF 40 FEET FROM ALL STRUCTURES. A KEYED GATE VALVE SHALL BE PROVIDED FOR EACH FIRE HYDRANT IN AN ACCESSIBLE LOCATION. VALVES SHALL NOT BE LOCATED IN PARKING STALLS.
7. ALL PIPES SHALL BE APPROVED FOR USE IN FIRE SERVICE SYSTEMS (CLASS 900 DR-18 MINIMUM). CLASS 900 DR-14 PIPES SHALL BE USED WHERE THE PRESSURES MAY EXCEED 150 PSI.
8. ALL FERROUS PIPE AND FITTINGS SHALL BE PROTECTED WITH LOOSE 8-MIL POLYETHYLENE TUBE. THE ENDS OF THE TUBE AND ANY SPLICES MADE FOR T's OR OTHER PIPING COMPONENTS SHALL BE SEALED WITH 2" TAPE, APPROVED FOR UNDERGROUND USE. ALL BOLT JOINTS SHALL BE CLEANED AND THOROUGHLY COATED WITH ASPHALT OR OTHER CORROSION RETARDING MATERIAL AFTER ASSEMBLY AND PRIOR TO POLY-TUBE INSTALLATION.
9. A BED OF CLEAN FILL SAND SHALL BE PROVIDED ABOVE AND BELOW THE PIPE, A MINIMUM OF 12" ABOVE AND 6" BELOW.
10. ALL BOLTS USED FOR UNDERGROUND CONNECTIONS SHALL BE STAINLESS STEEL.
11. A MINIMUM OF 30" OF COVER, FROM FINISHED GRADE TO THE TOP OF THE PIPE SHALL BE PROVIDED. WHEN SURFACE LOADS ARE EXPECTED, A MINIMUM OF 36" COVER SHALL BE PROVIDED.
12. THRUST BLOCKS, OR OTHER APPROVED METHOD OF THRUST RESTRAINT, SHALL BE PROVIDED WHEREVER PIPE CHANGES DIRECTION.
13. THE TRENCH SHALL BE EXCAVATED FOR THRUST BLOCKS AND INSPECTED PRIOR TO POUR. ALL CORROSION PROTECTION SHALL BE IN PLACE.
14. A HYDROSTATIC TEST (200 PSI FOR TWO HOURS OR 50 PSI OVER MAXIMUM STATIC PRESSURE, WHICHEVER IS GREATER) SHALL BE PERFORMED. BACKFILL BETWEEN THE JOINTS TO PREVENT MOVEMENT OF THE PIPE.
15. THE SYSTEM SHALL BE THOROUGHLY FLUSHED BEFORE CONNECTION IS MADE TO OVERHEAD PIPING. FLOW SHALL BE THROUGH A MINIMUM 4" HOSE PIPE.
16. PRIVATE HYDRANTS, SPRINKLER CONTROL VALVES, DETECTOR CHECK ASSEMBLIES, POST INDICATING VALVES AND FIRE DEPARTMENT CONNECTIONS SHALL BE PAINTED OSHA RED, UNLESS NOTED OTHERWISE.
17. THE CONTROL VALVES SHALL BE LOCKED IN THE OPEN POSITION. VALVES SHALL BE MONITORED IF THEY SERVE 6 OR MORE SPRINKLER HEADS.

FIRE WATER GENERAL NOTES:

1. FIRE WATER PIPE, FITTINGS, AND APPURTENANCES SHALL COMPLY WITH NFPA 24 INCLUDING BUT NOT LIMITED TO THE FOLLOWING:
   - 1.1. FIRE DEPARTMENT CONNECTIONS (FDC) SHALL BE PER NFPA 24-5.9.
   - 1.2. FDC LOCATION AND SIGNAGE SHALL BE PER NFPA 24-5.9.5.

IMPORTANT NOTICE

1. ALL ASBESTOS CEMENT PIPE TO BE REMOVED SHALL BE SNAPPED, ENCAPSULATED, AND DISPOSED OF PER LOCAL, STATE, AND FEDERAL REGULATIONS.
2. DOMESTIC WATER SERVICE AND FIRE PROTECTION SHALL BE MAINTAINED DURING CONSTRUCTION. PROVIDE BYPASS LINES DURING CONSTRUCTION INCLUDING TIE-IN. COORDINATE ALL SHUT DOWNS OF WATER AND POWER WITH OWNER PRIOR TO CONSTRUCTION.
3. PURSUANT TO CALIFORNIA ASSEMBLY BILL 1953 ALL PIPE, FITTINGS, AND FIXTURES INTENDED TO CONVEY OR DISPENSE WATER FOR HUMAN CONSUMPTION THROUGH DRINKING WATER OR COOKING SHALL BE "LEAD FREE" AS OF JANUARY 1, 2010.

DEDICATED FIRE ACCESS

PORTIONS OF DEMOLITION MAY REQUIRE BLOCKING AND/OR OBSTRUCTING THROUGH ACCESS TO EMERGENCY / FIRE ACCESS VEHICLES. IT SHALL BE THE SOLE RESPONSIBILITY OF THE CONTRACTOR TO PROVIDE A FIRE WATCH SPECIALIST SERVICE FOR THE DURATION OF TIME THAT EMERGENCY / FIRE ACCESS VEHICLES ARE BLOCKED AND/OR OBSTRUCTED DURING CONSTRUCTION UNLESS EQUIVALENT ALTERNATE MEASURES ARE TAKEN TO ENSURE CONTINUOUS ACCESS TO EMERGENCY / FIRE ACCESS VEHICLES. CONTRACTOR TO COORDINATE THROUGH ACCESS TO EMERGENCY / FIRE ACCESS VEHICLES WITH THE LOCAL FIRE AUTHORITY HAVING JURISDICTION.

SITE FIRE FLOW AVAILABLE WATER PRESSURE

HYDRANT #1:
LOCATION: HIGH SCHOOL PARKING LOT NEAR GYM ON OAK AVENUE
STATIC / RESIDUAL HYDRANT: CORNER OF SCRIPPS DRIVE AND OAK AVENUE
STATIC PRESSURE: 52 P.S.I.
RESIDUAL PRESSURE: 49 P.S.I.
TOTAL TEST FLOW RATE: 1500 G.P.M.
CALCULATED FLOW: 5,385 G.P.M. @ 20 P.S.I.

HYDRANT #2:
LOCATION: HIGH SCHOOL PARKING LOT NEAR TENNIS COURTS
STATIC / RESIDUAL HYDRANT: ACROSS FROM 200 WEST. 14TH STREET
STATIC PRESSURE: 50 P.S.I.
RESIDUAL PRESSURE: 48 P.S.I.
TOTAL TEST FLOW-RATE: 1500 G.P.M.
CALCULATED FLOW RATE: 6,474 G.P.M. @ 20 P.S.I.

TEST DATE: DECEMBER 17, 2020

VICINITY MAP

LOCATION MAP

N.T.S.

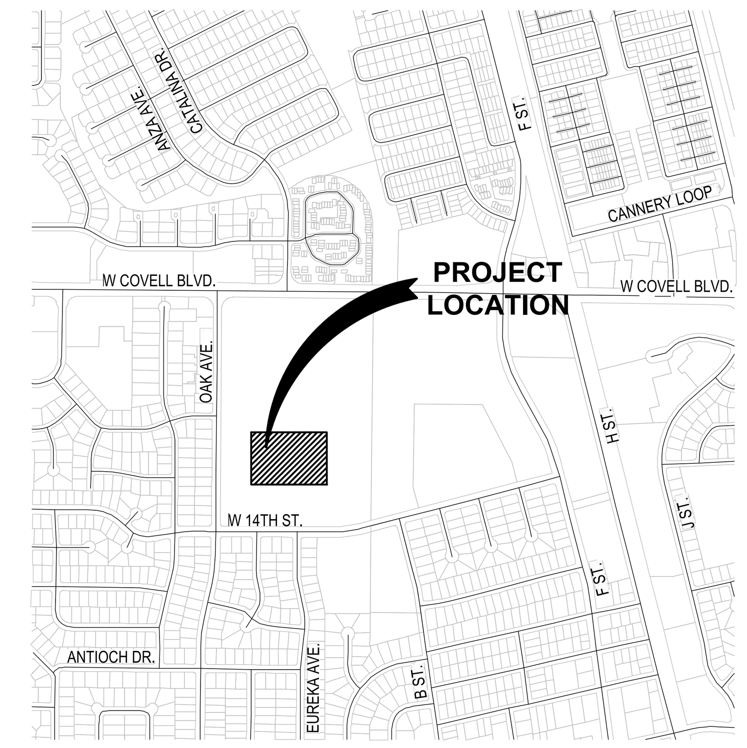

CIVIL SHEET INDEX

C0.01	CIVIL NOTES
C0.02	KEY MAP
C0.03	EXISTING CONDITIONS PLAN
C0.04	EXISTING CONDITIONS PLAN
C0.05	EXISTING CONDITIONS PLAN
C0.06	EXISTING CONDITIONS PLAN
C1.01	DEMOLITION PLAN
C1.02	DEMOLITION PLAN
C1.03	DEMOLITION PLAN
C1.04	DEMOLITION PLAN
C2.01	GRADING PLAN
C2.02	GRADING PLAN
C2.03	GRADING PLAN
C2.04	GRADING PLAN
C3.01	STORM DRAIN PLAN
C3.02	STORM DRAIN PLAN
C3.03	STORM DRAIN PLAN
C4.01	UTILITY PLAN
C4.02	UTILITY PLAN
C4.03	UTILITY PLAN
C5.01	HORIZONTAL CONTROL, PAVING, STRIPING AND SIGNAGE PLAN
C5.02	HORIZONTAL CONTROL, PAVING, STRIPING AND SIGNAGE PLAN
C5.03	HORIZONTAL CONTROL, PAVING, STRIPING AND SIGNAGE PLAN
C5.04	HORIZONTAL CONTROL, PAVING, STRIPING AND SIGNAGE PLAN
C6.01	EROSION CONTROL PLAN
C6.02	EROSION CONTROL PLAN
C6.03	EROSION CONTROL PLAN
C6.04	EROSION CONTROL PLAN
C7.01	CIVIL DETAILS
C7.02	CIVIL DETAILS
C7.03	CIVIL DETAILS

DIG ALERT NOTICE

PURSUANT TO THE CALIFORNIA GOVERNMENT CODE SECTION 4216, NO EXCAVATION PERMIT IS VALID UNLESS DIG ALERT HAS BEEN CONTACTED AT LEAST TWO (2) WORKING DAYS PRIOR TO THE COMMENCEMENT OF EXCAVATION AND AN INQUIRY IDENTIFICATION NUMBER HAS BEEN ISSUED.

INQUIRY ID# ____________

DIGALERT
811 Know what's below. Call 811 before you dig.

IDENTIFICATION STAMP
DIV. OF THE STATE ARCHITECT
APP: 02-119490 INC:
REVIEWED FOR
SS ☑ FLS ☑ ACS ☑
DATE: 09/13/2022

LPA
ARCHITECTURE ENGINEERING INTERIORS
LANDSCAPE ARCHITECTURE PLANNING

916-287-2400 Office
916-287-2401 Fax
LPADesignStudios.com
431 I Street,
Suite 107
Sacramento, California 95814

REGISTERED PROFESSIONAL ENGINEER
KATHEREEN M. SHINKAI
R.C.E. 68369
EXP. 9-30-23
CIVIL
STATE OF CALIFORNIA

This document and all other project documents, ideas, aesthetics and designs incorporated therein are instruments of service. All project documents are copyright protected, are the property of LPA, Inc. (LPA) and cannot be lawfully used in whole or in part for any project or purpose except as set forth in the contractual agreement between LPA and its Client. The unauthorized disclosure and/or use of the project documents (including the creation of derivative works), may give rise to liability for copyright infringement, unlawful disclosure, use or misappropriation of property rights held by LPA. The unauthorized use of the project documents will give rise to the recovery of monetary losses and damages including attorney fees and costs for which the unauthorized user will be held liable.
Project documents describe the design intent of the work and are not a representation of as-built or existing conditions. LPA is not responsible for any discrepancies between the project documents and the existing conditions.

© LPA, Inc.

DAVIS HIGH SCHOOL
AQUATICS CENTER
315 WEST 14TH ST, DAVIS, CA 95616

Developed for
DAVIS JOINT UNIFIED SCHOOL DISTRICT

Revision	Date

Submittal	Date
50% DD REVIEW	06/15/2021
100% DESIGN DEVELOPMENT	07/26/2021
50% CD REVIEW	10/08/2021
100% CD DSA SUBMITTAL	10/22/2021
DSA SUBMITTAL	03/24/2022

Job Number	19044.13
Date Published	03/24/2022
Checked By	K. SHINKAI
Scale	1" = 20'

CIVIL NOTES

C0.01

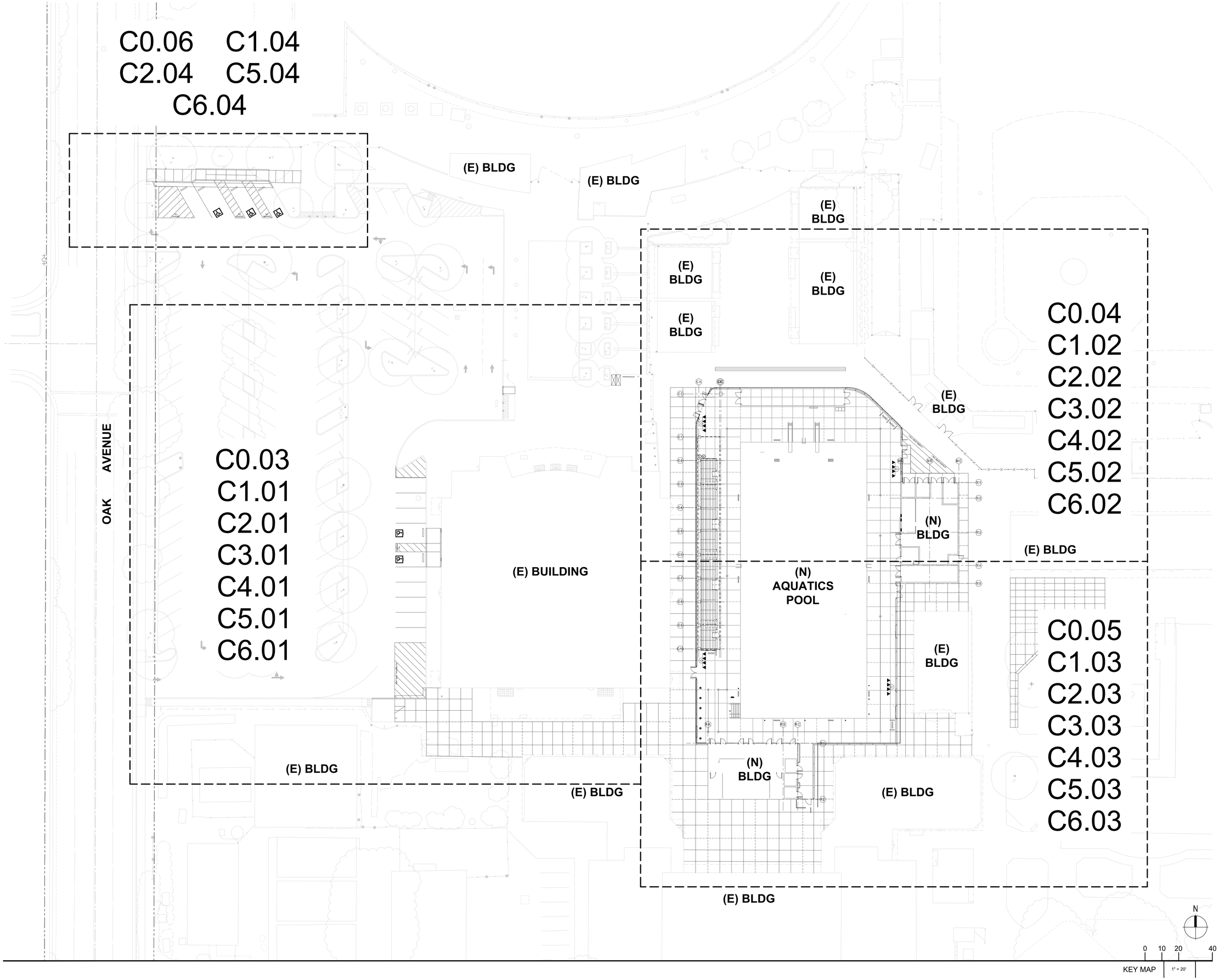

IDENTIFICATION STAMP
DIV. OF THE STATE ARCHITECT
APP: 02-119490 INC:
REVIEWED FOR
SS ☑ FLS ☑ ACS ☑
DATE: 09/13/2022

LPA

ARCHITECTURE ENGINEERING INTERIORS
LANDSCAPE ARCHITECTURE PLANNING

916-287-2400 Office

916-287-2401 Fax

LPADesignStudios.com

431 I Street,
Suite 107
Sacramento, California 95814

REGISTERED PROFESSIONAL ENGINEER
KATHLEEN M. SHINKAI
R.C.E. 68369
EXP. 9-30-23
CIVIL
STATE OF CALIFORNIA

This document and all other project documents, ideas, aesthetics and designs incorporated therein are instruments of service. All project documents are copyright protected, are the property of LPA, Inc. (LPA) and cannot be lawfully used in whole or in part for any project or purpose except as set forth in the contractual agreement between LPA and its Client. The unauthorized disclosure and/or use of the project documents (including the creation of derivative works), may give rise to liability for copyright infringement, unlawful disclosure, use or misappropriation of property rights held by LPA. The unauthorized use of the project documents will give rise to the recovery of monetary losses and damages including attorney fees and costs for which the unauthorized user will be held liable.
Project documents describe the design intent of the work and are not a representation of as-built or existing conditions. LPA is not responsible for any discrepancies between the project documents and the existing conditions.

© LPA, Inc.

DAVIS HIGH SCHOOL
AQUATICS CENTER
315 WEST 14TH ST, DAVIS, CA 95616

Developed for
DAVIS JOINT UNIFIED SCHOOL DISTRICT

Revision	Date

Submittal	Date
50% DD REVIEW	06/15/2021
100% DESIGN DEVELOPMENT	07/26/2021
50% CD REVIEW	10/08/2021
100% CD DSA SUBMITTAL	10/22/2021
DSA SUBMITTAL	03/24/2022

Job Number	19044.13
Date Published	03/24/2022
Checked By	K. SHINKAI
Scale	1" = 20'

KEY MAP

C0.02

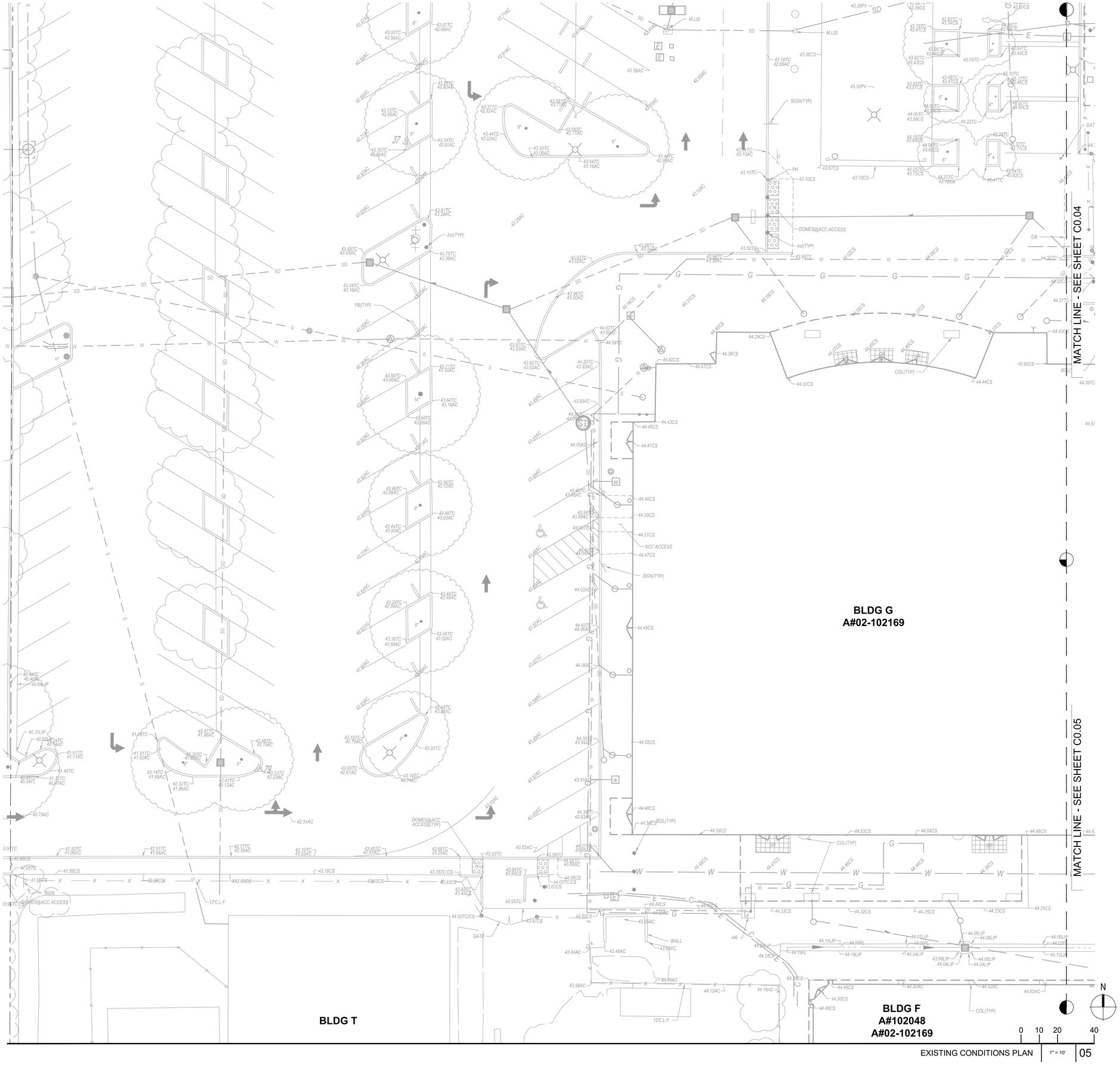

IDENTIFICATION STAMP
DIV. OF THE STATE ARCHITECT
APP: 02-119490 INC:
REVIEWED FOR
SS ☑ FLS ☑ ACS ☑
DATE: 09/13/2022

LPA

ARCHITECTURE ENGINEERING INTERIORS
LANDSCAPE ARCHITECTURE PLANNING

916-287-2400 Office

916-287-2401 Fax

LPADesignStudios.com

431 I Street,
Suite 107
Sacramento, California 95814

REGISTERED PROFESSIONAL ENGINEER
KATHLEEN M. SHINKAI
R.C.E. 68369
EXP. 9-30-23
CIVIL
STATE OF CALIFORNIA

This document and all other project documents, ideas, aesthetics and designs incorporated therein are instruments of service. All project documents are copyright protected, are the property of LPA, Inc. (LPA) and cannot be lawfully used in whole or in part for any project or purpose except as set forth in the contractual agreement between LPA and its Client. The unauthorized disclosure and/or use of the project documents (including the creation of derivative works), may give rise to liability for copyright infringement, unlawful disclosure, use or misappropriation of property rights held by LPA. The unauthorized use of the project documents will give rise to the recovery of monetary losses and damages including attorney fees and costs for which the unauthorized user will be held liable.
Project documents describe the design intent of the work and are not a representation of as-built or existing conditions. LPA is not responsible for any discrepancies between the project documents and the existing conditions.

© LPA, Inc.

DAVIS HIGH SCHOOL
AQUATICS CENTER
315 WEST 14TH ST, DAVIS, CA 95616

Developed for
DAVIS JOINT UNIFIED SCHOOL DISTRICT

Revision	Date

Submittal	Date
50% DD REVIEW	06/15/2021
100% DESIGN DEVELOPMENT	07/26/2021
50% CD REVIEW	10/08/2021
100% CD DSA SUBMITTAL	10/22/2021
DSA SUBMITTAL	03/24/2022

Job Number	19044.13
Date Published	03/24/2022
Checked By	K. SHINKAI
Scale	1" = 10'

EXISTING CONDITIONS PLAN

C0.03

IDENTIFICATION STAMP
DIV. OF THE STATE ARCHITECT
APP: 02-119490 INC:
REVIEWED FOR
SS ☑ FLS ☑ ACS ☑
DATE: 09/13/2022

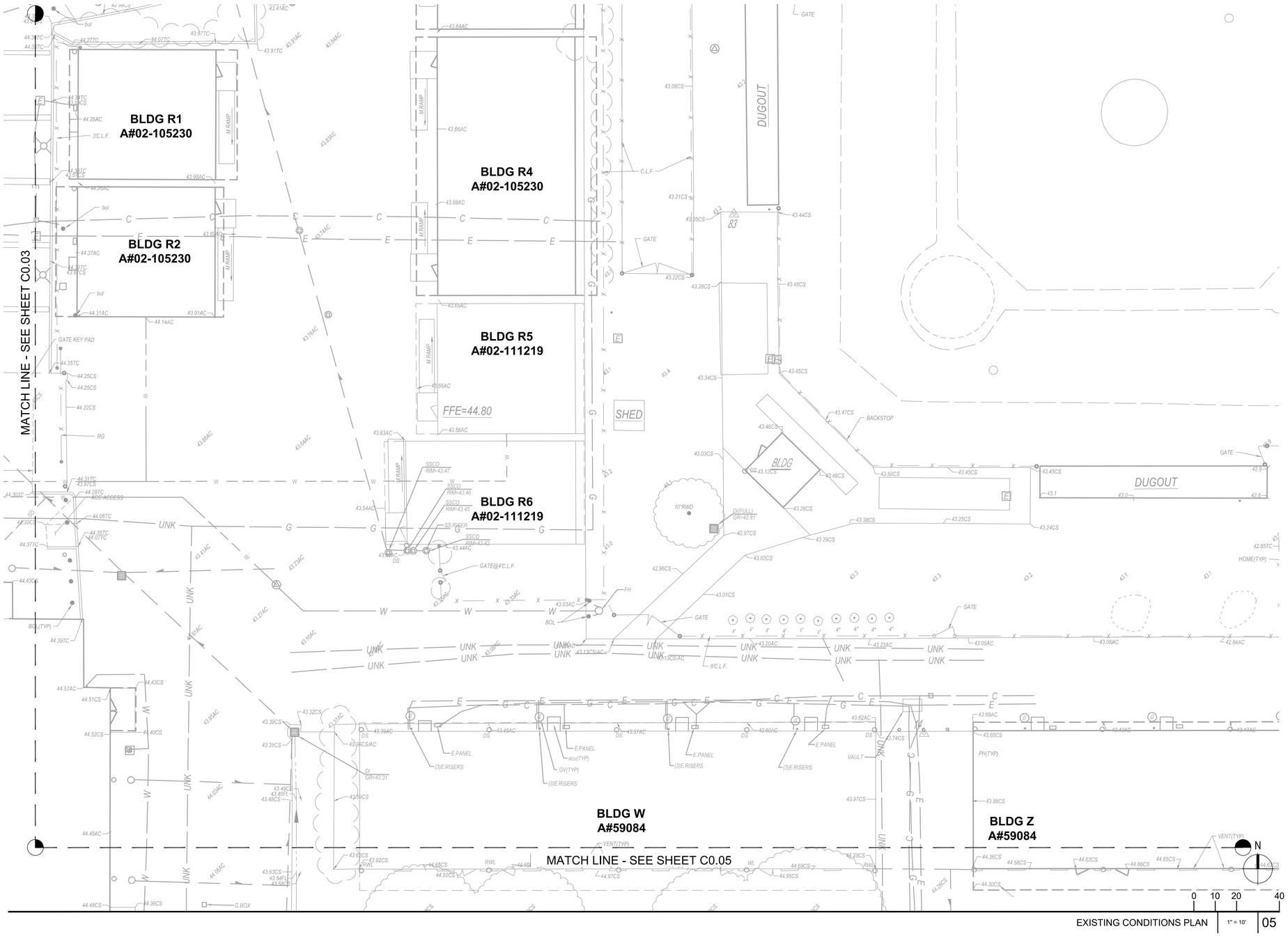

EXISTING CONDITIONS PLAN | 1" = 10' | 05

LPA

ARCHITECTURE ENGINEERING INTERIORS
LANDSCAPE ARCHITECTURE PLANNING

916-287-2400 Office

916-287-2401 Fax

LPADesignStudios.com

431 I Street,
Suite 107
Sacramento, California 95814

REGISTERED PROFESSIONAL ENGINEER
KATHLEEN M. SHINKAI
R.C.E. 68369
EXP. 9-30-23
STATE OF CALIFORNIA

This document and all other project documents, ideas, aesthetics and designs incorporated therein are instruments of service. All project documents are copyright protected, are the property of LPA, Inc. (LPA) and cannot be lawfully used in whole or in part for any project or purpose except as set forth in the contractual agreement between LPA and its Client. The unauthorized disclosure and/or use of the project documents (including the creation of derivative works), may give rise to liability for copyright infringement, unlawful disclosure, use or misappropriation of property rights held by LPA. The unauthorized use of the project documents will give rise to the recovery of monetary losses and damages including attorney fees and costs for which the unauthorized user will be held liable.
Project documents describe the design intent of the work and are not a representation of as-built or existing conditions. LPA is not responsible for any discrepancies between the project documents and the existing conditions.

© LPA, Inc.

DAVIS HIGH SCHOOL
AQUATICS CENTER
315 WEST 14TH ST, DAVIS, CA 95616

Developed for
DAVIS JOINT UNIFIED SCHOOL DISTRICT

Revision	Date

Submittal	Date
50% DD REVIEW	06/15/2021
100% DESIGN DEVELOPMENT	07/26/2021
50% CD REVIEW	10/08/2021
100% CD DSA SUBMITTAL	10/22/2021
DSA SUBMITTAL	03/24/2022

Job Number	19044.13
Date Published	03/24/2022
Checked By	K. SHINKAI
Scale	1" = 10'

EXISTING CONDITIONS PLAN

C0.04

IDENTIFICATION STAMP
DIV. OF THE STATE ARCHITECT
APP: 02-119490 INC:
REVIEWED FOR
SS ☑ FLS ☑ ACS ☑
DATE: 09/13/2022

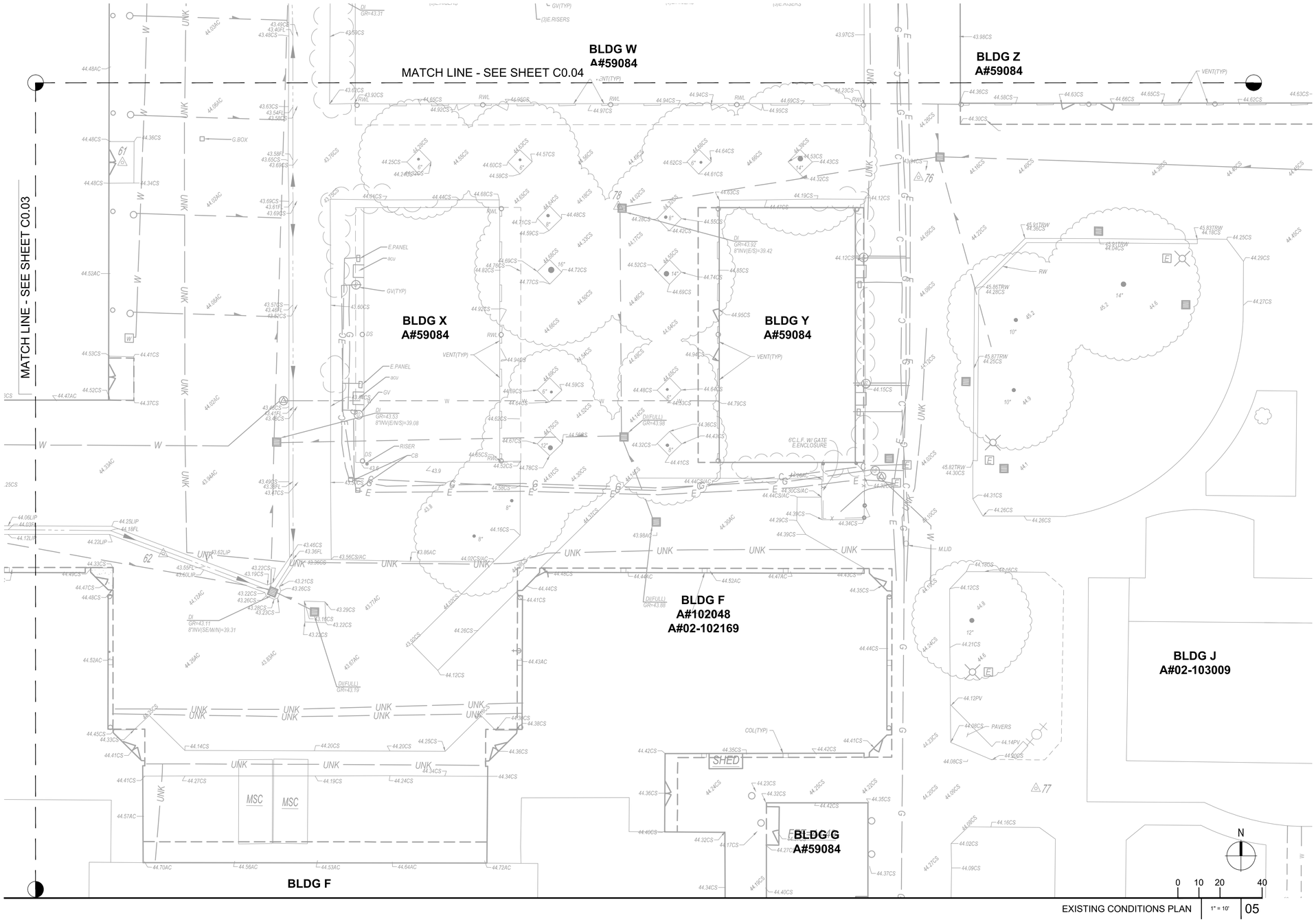

EXISTING CONDITIONS PLAN 1" = 10' 05

LPA

ARCHITECTURE ENGINEERING INTERIORS
LANDSCAPE ARCHITECTURE PLANNING

916-287-2400 Office

916-287-2401 Fax

LPADesignStudios.com

431 I Street,
Suite 107
Sacramento, California 95814

REGISTERED PROFESSIONAL ENGINEER
KATHLEEN M. SHINAI
R.C.E. 68369
EXP. 9-30-23
CIVIL
STATE OF CALIFORNIA

This document and all other project documents, ideas, aesthetics and designs incorporated therein are instruments of service. All project documents are copyright protected, are the property of LPA, Inc. (LPA) and cannot be lawfully used in whole or in part for any project or purpose except as set forth in the contractual agreement between LPA and its Client. The unauthorized disclosure and/or use of the project documents (including the creation of derivative works), may give rise to liability for copyright infringement, unlawful disclosure, use or misappropriation of property rights held by LPA. The unauthorized use of the project documents will give rise to the recovery of monetary losses and damages including attorney fees and costs for which the unauthorized user will be held liable.
Project documents describe the design intent of the work and are not a representation of as-built or existing conditions. LPA is not responsible for any discrepancies between the project documents and the existing conditions.

© LPA, Inc.

DAVIS HIGH SCHOOL
AQUATICS CENTER
315 WEST 14TH ST, DAVIS, CA 95616

Developed for
DAVIS JOINT UNIFIED SCHOOL DISTRICT

Revision	Date

Submittal	Date
50% DD REVIEW	06/15/2021
100% DESIGN DEVELOPMENT	07/26/2021
50% CD REVIEW	10/08/2021
100% CD DSA SUBMITTAL	10/22/2021
DSA SUBMITTAL	03/24/2022

Job Number	19044.13
Date Published	03/24/2022
Checked By	K. SHINKAI
Scale	1" = 10'

EXISTING CONDITIONS PLAN

C0.05

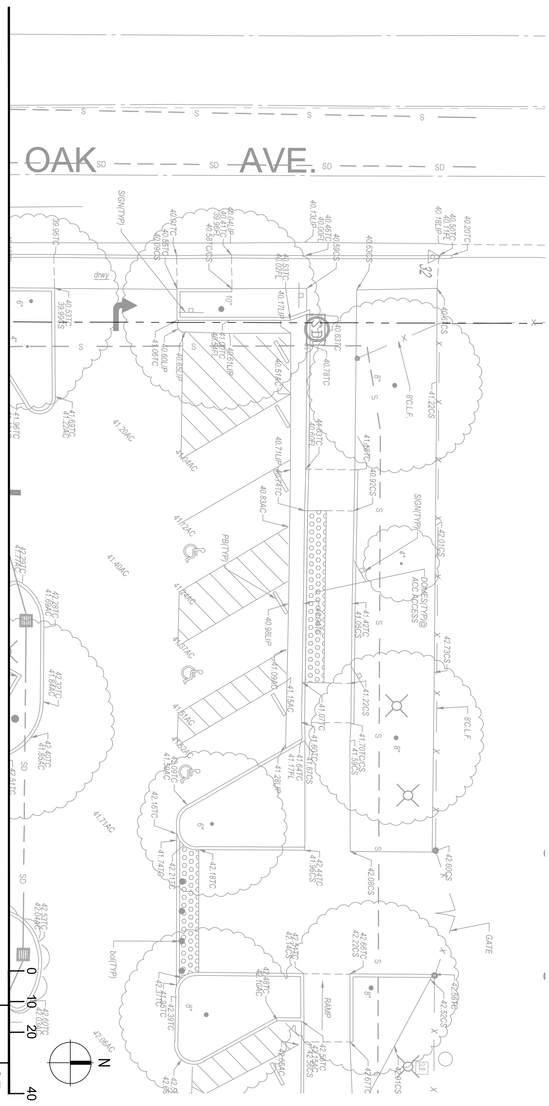

EXISTING CONDITIONS PLAN 05

IDENTIFICATION STAMP
DIV. OF THE STATE ARCHITECT
APP: 02-119490 INC:
REVIEWED FOR
SS ☑ FLS ☑ ACS ☑
DATE: 09/13/2022

LPA
ARCHITECTURE ENGINEERING INTERIORS
LANDSCAPE ARCHITECTURE PLANNING

916-287-2400 Office
916-287-2401 Fax
LPADesignStudios.com
431 I Street,
Suite 107
Sacramento, California 95814

REGISTERED PROFESSIONAL ENGINEER
KATHERLEEN M. SHINKAI
R.C.E. 68569
Exp. 06-30-23
STATE OF CALIFORNIA

This document and all other project documents, ideas, aesthetics and designs incorporated in these documents are copyright protected, are the property of LPA, Inc. (LPA) and cannot be lawfully used by anyone other than LPA, Inc. except as set forth in the contractual agreement between LPA and its client. The unauthorized disclosure and/or use of the project documents may cause irreparable harm and damage to LPA, give rise to liability for copyright infringement, violation of trade secret laws and violation of property rights held by LPA. The unauthorized use of the project documents may also give rise to liability for attorney fees and costs for which the unauthorized user will be liable. The Project documents describe the design intent of LPA based on information provided by others or existing conditions. LPA is not responsible for any inconsistencies between the project documents and the existing conditions.
© LPA, Inc.

DAVIS HIGH SCHOOL AQUATICS CENTER

315 WEST 14TH ST, DAVIS, CA 95616

Developed for
DAVIS JOINT UNIFIED SCHOOL DISTRICT

Revision	Date

Submittal	Date
50% DD REVIEW	06/15/2021
100% DESIGN DEVELOPMENT	07/26/2021
50% CD REVIEW	10/08/2021
100% CD DSA SUBMITTAL	10/22/2021
DSA SUBMITTAL	03/24/2022

Job Number	19044.13
Date Published	03/24/2022
Checked By	K. SHINKAI
Scale	1" = 10'

EXISTING CONDITIONS PLAN

C0.06

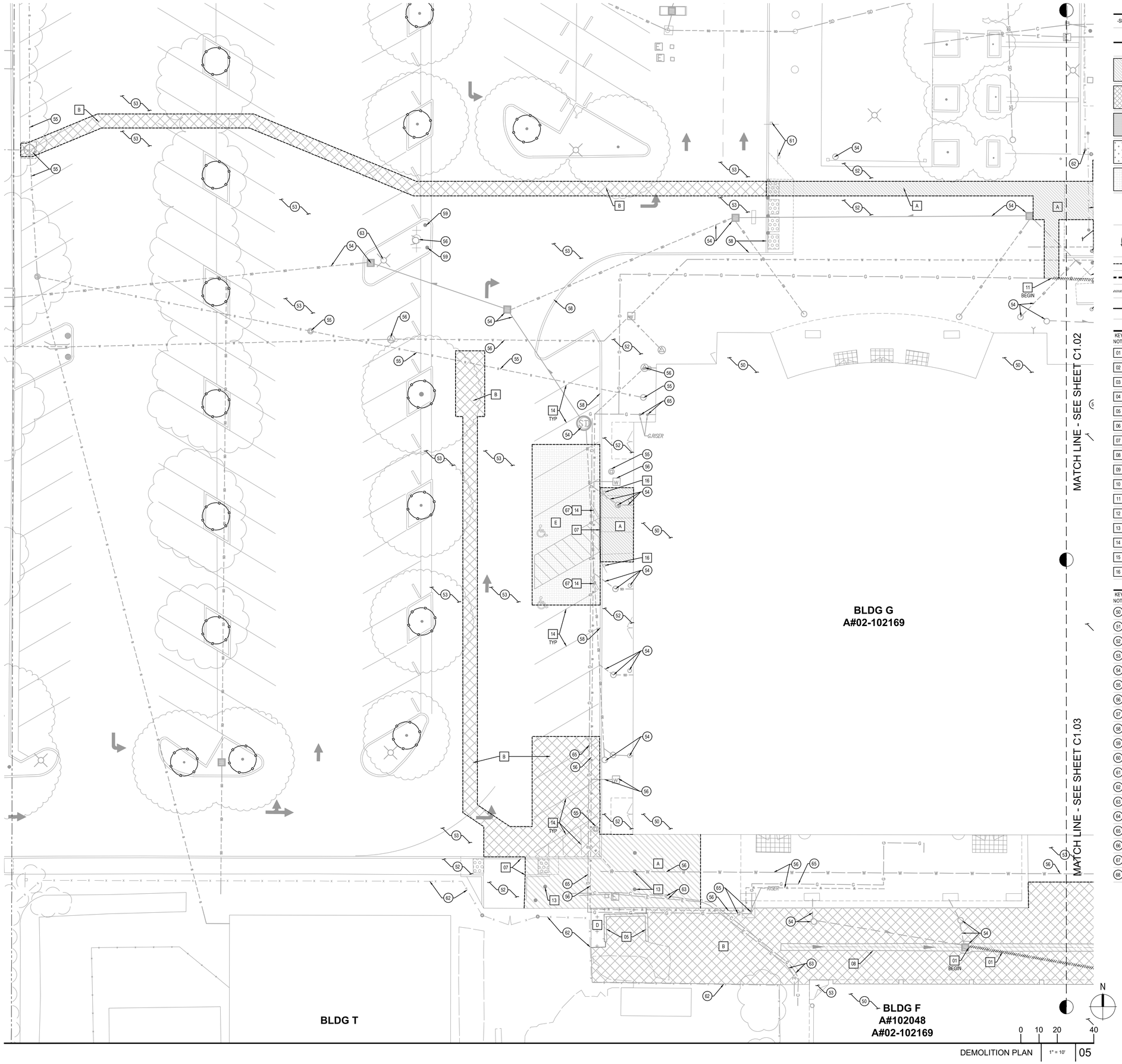

DEMOLITION NOTES

-SEE DEMOLITION NOTES, SHEET C0.01.

DEMOLITION LEGEND

LABEL	DESCRIPTION
A	REMOVE (E) CONCRETE PAVEMENT/SIDEWALK AND BASE MATERIAL. SEE DEMOLITION NOTE 10 SHEET C0.01.
B	REMOVE (E) AC PAVEMENT AND BASE MATERIAL. SEE DEMOLITION NOTE 10 SHEET C0.01.
C	REMOVE (E) BLDG STRUCTURE AND FOUNDATIONS. FOR PORTABLE BLDGS SET ON PAVEMENT, REMOVE (E) PAVEMENT AND BASE MATERIAL BENEATH BLDG FOOTPRINT. SEE DEMOLITION NOTE 2 SHEET C0.01.
D	REMOVE (E) LANDSCAPING. SEE LANDSCAPE AND IRRIGATION PLANS FOR IMPROVEMENTS.
E	REMOVE (E) ASPHALT PAVEMENT; BASE MATERIAL TO REMAIN. SEE DEMOLITION NOTE 10 SHEET C0.01.
	REMOVE (E) TREE. SEE DEMOLITION NOTE 5 SHEET C0.01.
	(E) TREE TO REMAIN AND BE PROTECTED. SEE DEMOLITION NOTE 5 SHEET C0.01.
	SAWCUT (E) PAVEMENT AS NEEDED. SEE DEMOLITION NOTE 6 AND 10 SHEET C0.01.
	APPROXIMATE LIMIT OF WORK.
	REMOVE (E) UTILITY. SEE DEMOLITION NOTES 2, 4, 8, AND 9 SHEET C0.01.
	UNKNOWN UTILITY WITHIN PROJECT LIMITS. FIELD-VERY TYPE, COMPONENTS AND BUILDINGS SERVICED. COORDINATE FINAL RELOCATION AND/OR REMOVAL WITH ARCHITECT PRIOR TO WORK.

DEMOLITION KEYNOTES

KEY NOTE	DESCRIPTION
01	REMOVE (E) STORM DRAIN PIPE AND APPURTENANCES. SEE STORM DRAINAGE PLAN FOR IMPROVEMENTS.
02	REMOVE (E) SANITARY SEWER PIPE AND APPURTENANCES. SEE UTILITY PLAN FOR IMPROVEMENTS.
03	REMOVE (E) WATER PIPE AND APPURTENANCES. SEE UTILITY PLAN FOR IMPROVEMENTS.
04	REMOVE (E) IRRIGATION WATER LINE AND APPURTENANCES. SEE IRRIGATION PLANS FOR IMPROVEMENTS.
05	REMOVE (E) RETAINING OR BLOCK WALL AND FOOTING.
06	REMOVE (E) SIGN AND FOOTING.
07	REMOVE (E) CURB AND/OR GUTTER.
08	REMOVE (E) CONCRETE VALLEY GUTTER.
09	REMOVE (E) FENCE AND FOOTINGS. SEE LANDSCAPE PLANS FOR IMPROVEMENTS.
10	REMOVE (E) LIGHT STANDARD AND FOOTING. SEE ELECTRICAL PLANS FOR IMPROVEMENTS.
11	REMOVE (E) NATURAL GAS LINE AND APPURTENANCES. SEE PLUMBING PLANS FOR IMPROVEMENTS.
12	REMOVE (E) ELECTRICAL CONDUITS AND APPURTENANCES. SEE ELECTRICAL PLANS FOR DETAIL AND IMPROVEMENTS.
13	REMOVE (E) BOLLARD AND FOOTING.
14	REMOVE (E) STRIPING AND/OR WHEEL STOP.
15	RAIN WATER LEADER: REMOVE (E) UG PIPING FOR FUTURE RECONNECTION. SEE STORM DRAIN PLANS FOR IMPROVEMENTS.
16	REMOVE (E) SIGN POST, SIGNAGE, AND FOOTING.

PROTECTION KEYNOTES

KEY NOTE	DESCRIPTION
50	PROTECT (E) BUILDING, FOUNDATION AND OTHER STRUCTURAL FEATURES AND BUILDING UTILITIES.
51	PROTECT (E) CANOPY AND COLUMNS, AND OTHER STRUCTURAL FEATURES AND CANOPY UTILITIES.
52	PROTECT (E) CONCRETE PAVEMENT/SIDEWALK.
53	PROTECT (E) AC PAVEMENT.
54	PROTECT (E) STORM DRAIN FACILITIES. PROVIDE TEMPORARY PLUGS WHERE INLETS ARE TO REMAIN WITH PIPES REMOVED. COORDINATE WITH (N) SD IMPROVEMENTS.
55	PROTECT (E) SANITARY SEWER FACILITIES.
56	PROTECT (E) WATER SERVICE FACILITIES.
57	PROTECT (E) IRRIGATION FACILITIES. VERIFY EXTENTS TO REMAIN WITH IRRIGATION CONSULTANT.
58	PROTECT (E) CURB AND/OR GUTTER.
59	PROTECT (E) BOLLARD.
60	PROTECT (E) RETAINING WALL.
61	PROTECT (E) MONUMENT AND/OR SIGN POST.
62	PROTECT (E) FENCING, GATES, POSTS, AND SIGNAGE, INCLUDING EXISTING ELECTRICAL POWER TO AUTOMATIC GATES (FIELD VERIFY POWER CONDUITS, ETC.).
63	PROTECT (E) ELECTRICAL FACILITIES.
64	PROTECT (E) UTILITY POLE AND CONDUIT.
65	PROTECT (E) GAS FACILITIES.
66	SALVAGE (E) LIGHT POLE FOR FUTURE REINSTALLATION.
67	SALVAGE (E) WHEEL STOP(S) FOR FUTURE REINSTALLATION.
68	PROTECT (E) FOUNDATION DURING UTILITY REMOVAL AND CONSTRUCTION ACTIVITY IN ACCORDANCE WITH 1809A.14.

IDENTIFICATION STAMP
DIV. OF THE STATE ARCHITECT
APP: 02-119490 INC:
REVIEWED FOR
SS ☑ FLS ☑ ACS ☑
DATE: 09/13/2022

LPA
ARCHITECTURE ENGINEERING INTERIORS
LANDSCAPE ARCHITECTURE PLANNING

916-287-2400 Office
916-287-2401 Fax
LPADesignStudios.com
431 I Street,
Suite 107
Sacramento, California 95814

REGISTERED PROFESSIONAL ENGINEER
KATHLEEN M. HIRTAKI
R.C.E. 68369
EXP. 9-30-23
STATE OF CALIFORNIA

This document and all other project documents, ideas, aesthetics and designs incorporated therein are instruments of service. All project documents are copyright protected, are the property of LPA, Inc. (LPA) and cannot be lawfully used in whole or in part for any project or purpose except as set forth in the contractual agreement between LPA and its Client. The unauthorized disclosure and/or use of the project documents (including the creation of derivative works), may give rise to liability for copyright infringement, unlawful disclosure, use or misappropriation of property rights held by LPA. The unauthorized use of the project documents will give rise to the recovery of monetary losses and damages including attorney fees and costs for which the unauthorized user will be held liable.
Project documents describe the design intent of the work and are not a representation of as-built or existing conditions. LPA is not responsible for any discrepancies between the project documents and the existing conditions.

© LPA, Inc.

DAVIS HIGH SCHOOL
AQUATICS CENTER
315 WEST 14TH ST, DAVIS, CA 95616

Developed for
DAVIS JOINT UNIFIED SCHOOL DISTRICT

Revision	Date

Submittal	Date
50% DD REVIEW	06/15/2021
100% DESIGN DEVELOPMENT	07/26/2021
50% CD REVIEW	10/08/2021
100% CD DSA SUBMITTAL	10/22/2021
DSA SUBMITTAL	03/24/2022

Job Number	19044.13
Date Published	03/24/2022
Checked By	K. SHINKAI
Scale	1" = 10'

DEMOLITION PLAN

C1.01

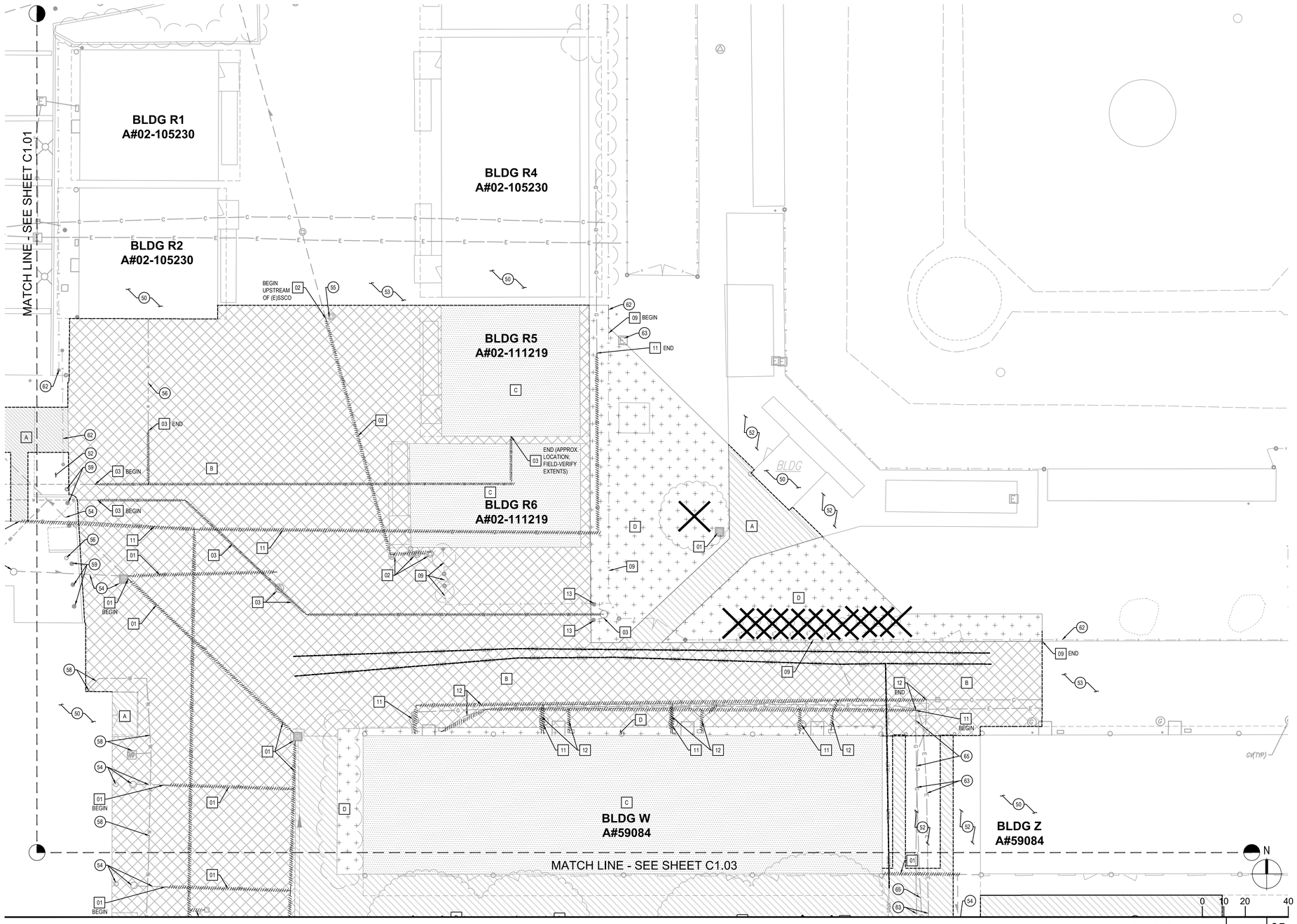

DEMOLITION NOTES

-SEE DEMOLITION NOTES, SHEET C0.01.

DEMOLITION LEGEND

LABEL	DESCRIPTION
A	REMOVE (E) CONCRETE PAVEMENT/SIDEWALK AND BASE MATERIAL. SEE DEMOLITION NOTE 10 SHEET C0.01.
B	REMOVE (E) AC PAVEMENT AND BASE MATERIAL. SEE DEMOLITION NOTE 10 SHEET C0.01.
C	REMOVE (E) BLDG STRUCTURE AND FOUNDATIONS. FOR PORTABLE BLDGS SET ON PAVEMENT, REMOVE (E) PAVEMENT AND BASE MATERIAL BENEATH BLDG FOOTPRINT. SEE DEMOLITION NOTE 2 SHEET C0.01.
D	REMOVE (E) LANDSCAPING. SEE LANDSCAPE AND IRRIGATION PLANS FOR IMPROVEMENTS.
E	REMOVE (E) ASPHALT PAVEMENT; BASE MATERIAL TO REMAIN. SEE DEMOLITION NOTE 10 SHEET C0.01.
	REMOVE (E) TREE. SEE DEMOLITION NOTE 5 SHEET C0.01.
	(E) TREE TO REMAIN AND BE PROTECTED. SEE DEMOLITION NOTE 5 SHEET C0.01.
	SAWCUT (E) PAVEMENT AS NEEDED. SEE DEMOLITION NOTE 6 AND 10 SHEET C0.01.
	APPROXIMATE LIMIT OF WORK.
	REMOVE (E) UTILITY. SEE DEMOLITION NOTES 2, 4, 8, AND 9 SHEET C0.01.
	UNKNOWN UTILITY WITHIN PROJECT LIMITS. FIELD-VERY TYPE, COMPONENTS AND BUILDINGS SERVICED. COORDINATE FINAL RELOCATION AND/OR REMOVAL WITH ARCHITECT PRIOR TO WORK.

DEMOLITION KEYNOTES

KEY NOTE	DESCRIPTION
01	REMOVE (E) STORM DRAIN PIPE AND APPURTENANCES. SEE STORM DRAINAGE PLAN FOR IMPROVEMENTS.
02	REMOVE (E) SANITARY SEWER PIPE AND APPURTENANCES. SEE UTILITY PLAN FOR IMPROVEMENTS.
03	REMOVE (E) WATER PIPE AND APPURTENANCES. SEE UTILITY PLAN FOR IMPROVEMENTS.
04	REMOVE (E) IRRIGATION WATER LINE AND APPURTENANCES. SEE IRRIGATION PLANS FOR IMPROVEMENTS.
05	REMOVE (E) RETAINING OR BLOCK WALL AND FOOTING.
06	REMOVE (E) SIGN AND FOOTING.
07	REMOVE (E) CURB AND/OR GUTTER.
08	REMOVE (E) CONCRETE VALLEY GUTTER.
09	REMOVE (E) FENCE AND FOOTINGS. SEE LANDSCAPE PLANS FOR IMPROVEMENTS.
10	REMOVE (E) LIGHT STANDARD AND FOOTING. SEE ELECTRICAL PLANS FOR IMPROVEMENTS.
11	REMOVE (E) NATURAL GAS LINE AND APPURTENANCES. SEE PLUMBING PLANS FOR IMPROVEMENTS.
12	REMOVE (E) ELECTRICAL CONDUITS AND APPURTENANCES. SEE ELECTRICAL PLANS FOR DETAIL AND IMPROVEMENTS.
13	REMOVE (E) BOLLARD AND FOOTING.
14	REMOVE (E) STRIPING AND/OR WHEEL STOP.
15	RAIN WATER LEADER: REMOVE (E) UG PIPING FOR FUTURE RECONNECTION. SEE STORM DRAIN PLANS FOR IMPROVEMENTS.
16	REMOVE (E) SIGN POST, SIGNAGE, AND FOOTING.

PROTECTION KEYNOTES

KEY NOTE	DESCRIPTION
50	PROTECT (E) BUILDING, FOUNDATION AND OTHER STRUCTURAL FEATURES AND BUILDING UTILITIES.
51	PROTECT (E) CANOPY AND COLUMNS, AND OTHER STRUCTURAL FEATURES AND CANOPY UTILITIES.
52	PROTECT (E) CONCRETE PAVEMENT/SIDEWALK.
53	PROTECT (E) AC PAVEMENT.
54	PROTECT (E) STORM DRAIN FACILITIES. PROVIDE TEMPORARY PLUGS WHERE INLETS ARE TO REMAIN WITH PIPES REMOVED. COORDINATE WITH (N) SD IMPROVEMENTS.
55	PROTECT (E) SANITARY SEWER FACILITIES.
56	PROTECT (E) WATER SERVICE FACILITIES.
57	PROTECT (E) IRRIGATION FACILITIES. VERIFY EXTENTS TO REMAIN WITH IRRIGATION CONSULTANT.
58	PROTECT (E) CURB AND/OR GUTTER.
59	PROTECT (E) BOLLARD.
60	PROTECT (E) RETAINING WALL.
61	PROTECT (E) MONUMENT AND/OR SIGN POST.
62	PROTECT (E) FENCING, GATES, POSTS, AND SIGNAGE, INCLUDING EXISTING ELECTRICAL POWER TO AUTOMATIC GATES (FIELD VERIFY POWER CONDUITS, ETC.).
63	PROTECT (E) ELECTRICAL FACILITIES.
64	PROTECT (E) UTILITY POLE AND CONDUIT.
65	PROTECT (E) GAS FACILITIES.
66	SALVAGE (E) LIGHT POLE FOR FUTURE REINSTALLATION.
67	SALVAGE (E) WHEEL STOP(S) FOR FUTURE REINSTALLATION.
68	PROTECT (E) FOUNDATION DURING UTILITY REMOVAL AND CONSTRUCTION ACTIVITY IN ACCORDANCE WITH 1809A.14.

IDENTIFICATION STAMP
DIV. OF THE STATE ARCHITECT
APP: 02-119490 INC:
REVIEWED FOR
SS ☑ FLS ☑ ACS ☑
DATE: 09/13/2022

LPA
ARCHITECTURE ENGINEERING INTERIORS
LANDSCAPE ARCHITECTURE PLANNING

916-287-2400 Office
916-287-2401 Fax
LPADesignStudios.com
431 I Street,
Suite 107
Sacramento, California 95814

REGISTERED PROFESSIONAL ENGINEER
KATHLEEN M. SHINAI
R.C.E. 68369
EXP. 9-30-23
CIVIL
STATE OF CALIFORNIA

This document and all other project documents, ideas, aesthetics and designs incorporated therein are instruments of service. All project documents are copyright protected, are the property of LPA, Inc. (LPA) and cannot be lawfully used in whole or in part for any project or purpose except as set forth in the contractual agreement between LPA and its Client. The unauthorized disclosure and/or use of the project documents (including the creation of derivative works), may give rise to liability for copyright infringement, unlawful disclosure, use or misappropriation of property rights held by LPA. The unauthorized use of the project documents will give rise to the recovery of monetary losses and damages including attorney fees and costs for which the unauthorized user will be held liable.
Project documents describe the design intent of the work and are not a representation of as-built or existing conditions. LPA is not responsible for any discrepancies between the project documents and the existing conditions.

© LPA, Inc.

DAVIS HIGH SCHOOL
AQUATICS CENTER
315 WEST 14TH ST, DAVIS, CA 95616

Developed for
DAVIS JOINT UNIFIED SCHOOL DISTRICT

Revision	Date

Submittal	Date
50% DD REVIEW	06/15/2021
100% DESIGN DEVELOPMENT	07/26/2021
50% CD REVIEW	10/08/2021
100% CD DSA SUBMITTAL	10/22/2021
DSA SUBMITTAL	03/24/2022

Job Number	19044.13
Date Published	03/24/2022
Checked By	K. SHINKAI
Scale	1" = 10'

DEMOLITION PLAN

C1.02

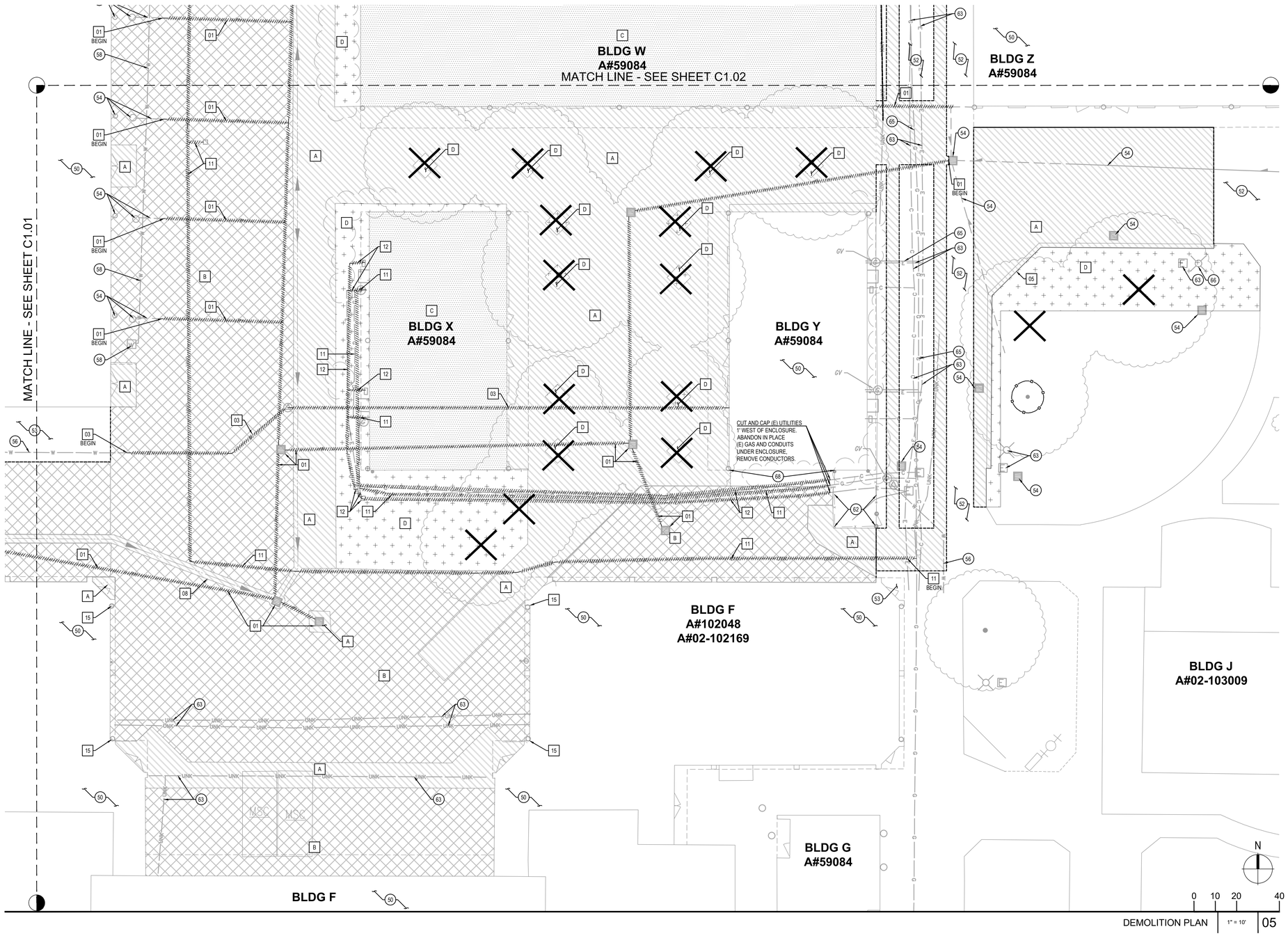

DEMOLITION NOTES

-SEE DEMOLITION NOTES, SHEET C0.01.

DEMOLITION LEGEND

LABEL	DESCRIPTION
A	REMOVE (E) CONCRETE PAVEMENT/SIDEWALK AND BASE MATERIAL. SEE DEMOLITION NOTE 10 SHEET C0.01.
B	REMOVE (E) AC PAVEMENT AND BASE MATERIAL. SEE DEMOLITION NOTE 10 SHEET C0.01.
C	REMOVE (E) BLDG STRUCTURE AND FOUNDATIONS. FOR PORTABLE BLDGS SET ON PAVEMENT, REMOVE (E) PAVEMENT AND BASE MATERIAL BENEATH BLDG FOOTPRINT. SEE DEMOLITION NOTE 2 SHEET C0.01.
D	REMOVE (E) LANDSCAPING. SEE LANDSCAPE AND IRRIGATION PLANS FOR IMPROVEMENTS.
E	REMOVE (E) ASPHALT PAVEMENT; BASE MATERIAL TO REMAIN. SEE DEMOLITION NOTE 10 SHEET C0.01.
	REMOVE (E) TREE. SEE DEMOLITION NOTE 5 SHEET C0.01.
	(E) TREE TO REMAIN AND BE PROTECTED. SEE DEMOLITION NOTE 5 SHEET C0.01.
	SAWCUT (E) PAVEMENT AS NEEDED. SEE DEMOLITION NOTE 6 AND 10 SHEET C0.01.
	APPROXIMATE LIMIT OF WORK.
	REMOVE (E) UTILITY. SEE DEMOLITION NOTES 2, 4, 8, AND 9 SHEET C0.01.
	UNKNOWN UTILITY WITHIN PROJECT LIMITS. FIELD-VERY TYPE, COMPONENTS AND BUILDINGS SERVICED. COORDINATE FINAL RELOCATION AND/OR REMOVAL WITH ARCHITECT PRIOR TO WORK.

DEMOLITION KEYNOTES

KEY NOTE	DESCRIPTION
01	REMOVE (E) STORM DRAIN PIPE AND APPURTENANCES. SEE STORM DRAINAGE PLAN FOR IMPROVEMENTS.
02	REMOVE (E) SANITARY SEWER PIPE AND APPURTENANCES. SEE UTILITY PLAN FOR IMPROVEMENTS.
03	REMOVE (E) WATER PIPE AND APPURTENANCES. SEE UTILITY PLAN FOR IMPROVEMENTS.
04	REMOVE (E) IRRIGATION WATER LINE AND APPURTENANCES. SEE IRRIGATION PLANS FOR IMPROVEMENTS.
05	REMOVE (E) RETAINING OR BLOCK WALL AND FOOTING.
06	REMOVE (E) SIGN AND FOOTING.
07	REMOVE (E) CURB AND/OR GUTTER.
08	REMOVE (E) CONCRETE VALLEY GUTTER.
09	REMOVE (E) FENCE AND FOOTINGS. SEE LANDSCAPE PLANS FOR IMPROVEMENTS.
10	REMOVE (E) LIGHT STANDARD AND FOOTING. SEE ELECTRICAL PLANS FOR IMPROVEMENTS.
11	REMOVE (E) NATURAL GAS LINE AND APPURTENANCES. SEE PLUMBING PLANS FOR IMPROVEMENTS.
12	REMOVE (E) ELECTRICAL CONDUITS AND APPURTENANCES. SEE ELECTRICAL PLANS FOR DETAIL AND IMPROVEMENTS.
13	REMOVE (E) BOLLARD AND FOOTING.
14	REMOVE (E) STRIPING AND/OR WHEEL STOP.
15	RAIN WATER LEADER: REMOVE (E) UG PIPING FOR FUTURE RECONNECTION. SEE STORM DRAIN PLANS FOR IMPROVEMENTS.
16	REMOVE (E) SIGN POST, SIGNAGE, AND FOOTING.

PROTECTION KEYNOTES

KEY NOTE	DESCRIPTION
50	PROTECT (E) BUILDING, FOUNDATION AND OTHER STRUCTURAL FEATURES AND BUILDING UTILITIES.
51	PROTECT (E) CANOPY AND COLUMNS, AND OTHER STRUCTURAL FEATURES AND CANOPY UTILITIES.
52	PROTECT (E) CONCRETE PAVEMENT/SIDEWALK.
53	PROTECT (E) AC PAVEMENT.
54	PROTECT (E) STORM DRAIN FACILITIES. PROVIDE TEMPORARY PLUGS WHERE INLETS ARE TO REMAIN WITH PIPES REMOVED. COORDINATE WITH (N) SD IMPROVEMENTS.
55	PROTECT (E) SANITARY SEWER FACILITIES.
56	PROTECT (E) WATER SERVICE FACILITIES.
57	PROTECT (E) IRRIGATION FACILITIES. VERIFY EXTENTS TO REMAIN WITH IRRIGATION CONSULTANT.
58	PROTECT (E) CURB AND/OR GUTTER.
59	PROTECT (E) BOLLARD.
60	PROTECT (E) RETAINING WALL.
61	PROTECT (E) MONUMENT AND/OR SIGN POST.
62	PROTECT (E) FENCING, GATES, POSTS, AND SIGNAGE, INCLUDING EXISTING ELECTRICAL POWER TO AUTOMATIC GATES (FIELD VERIFY POWER CONDUITS, ETC.).
63	PROTECT (E) ELECTRICAL FACILITIES.
64	PROTECT (E) UTILITY POLE AND CONDUIT.
65	PROTECT (E) GAS FACILITIES.
66	SALVAGE (E) LIGHT POLE FOR FUTURE REINSTALLATION.
67	SALVAGE (E) WHEEL STOP(S) FOR FUTURE REINSTALLATION.
68	PROTECT (E) FOUNDATION DURING UTILITY REMOVAL AND CONSTRUCTION ACTIVITY IN ACCORDANCE WITH 1809A.14.

IDENTIFICATION STAMP
DIV. OF THE STATE ARCHITECT
APP: 02-119490 INC:
REVIEWED FOR
SS ☑ FLS ☑ ACS ☑
DATE: 09/13/2022

LPA
ARCHITECTURE ENGINEERING INTERIORS
LANDSCAPE ARCHITECTURE PLANNING

916-287-2400 Office
916-287-2401 Fax
LPADesignStudios.com
431 I Street,
Suite 107
Sacramento, California 95814

REGISTERED PROFESSIONAL ENGINEER
KATHLEEN M. SHINKAI
R.C.E. 68369
EXP. 9-30-23
CIVIL
STATE OF CALIFORNIA

This document and all other project documents, ideas, aesthetics and designs incorporated therein are instruments of service. All project documents are copyright protected, are the property of LPA, Inc. (LPA) and cannot be lawfully used in whole or in part for any project or purpose except as set forth in the contractual agreement between LPA and its Client. The unauthorized disclosure and/or use of the project documents (including the creation of derivative works), may give rise to liability for copyright infringement, unlawful disclosure, use or misappropriation of property rights held by LPA. The unauthorized use of the project documents will give rise to the recovery of monetary losses and damages including attorney fees and costs for which the unauthorized user will be held liable.
Project documents describe the design intent of the work and are not a representation of as-built or existing conditions. LPA is not responsible for any discrepancies between the project documents and the existing conditions.

© LPA, Inc.

DAVIS HIGH SCHOOL
AQUATICS CENTER
315 WEST 14TH ST, DAVIS, CA 95616

Developed for
DAVIS JOINT UNIFIED SCHOOL DISTRICT

Revision	Date

Submittal	Date
50% DD REVIEW	06/15/2021
100% DESIGN DEVELOPMENT	07/26/2021
50% CD REVIEW	10/08/2021
100% CD DSA SUBMITTAL	10/22/2021
DSA SUBMITTAL	03/24/2022

Job Number	19044.13
Date Published	03/24/2022
Checked By	K. SHINKAI
Scale	1" = 10'

DEMOLITION PLAN

C1.03

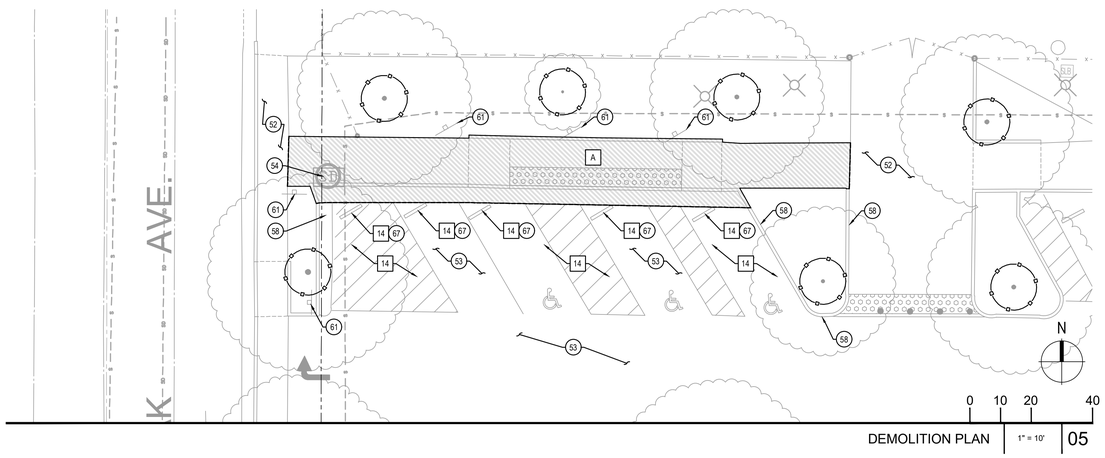

DEMOLITION PLAN 05

DEMOLITION NOTES

-SEE DEMOLITION NOTES, SHEET C0.01.

DEMOLITION LEGEND

LABEL	DESCRIPTION
A	REMOVE (E) CONCRETE PAVEMENT/SIDEWALK AND BASE MATERIAL. SEE DEMOLITION NOTE 10 SHEET C0.01.
B	REMOVE (E) AC PAVEMENT AND BASE MATERIAL. SEE DEMOLITION NOTE 10 SHEET C0.01.
C	REMOVE (E) BLDG STRUCTURE AND FOUNDATIONS. FOR PORTABLE BLDGS SET ON PAVEMENT, REMOVE (E) PAVEMENT AND BASE MATERIAL BENEATH BLDG FOOTPRINT. SEE DEMOLITION NOTE 2 SHEET C0.01.
D	REMOVE (E) LANDSCAPING. SEE LANDSCAPE AND IRRIGATION PLANS FOR IMPROVEMENTS.
E	REMOVE (E) ASPHALT PAVEMENT; BASE MATERIAL TO REMAIN. SEE DEMOLITION NOTE 10 SHEET C0.01.
	REMOVE (E) TREE. SEE DEMOLITION NOTE 5 SHEET C0.01.
	(E) TREE TO REMAIN AND BE PROTECTED. SEE DEMOLITION NOTE 5 SHEET C0.01.
	SAWCUT (E) PAVEMENT AS NEEDED. SEE DEMOLITION NOTE 6 AND 10 SHEET C0.01.
	APPROXIMATE LIMIT OF WORK.
	REMOVE (E) UTILITY. SEE DEMOLITION NOTES 2, 4, 8, AND 9 SHEET C0.01.
	UNKNOWN UTILITY WITHIN PROJECT LIMITS. FIELD-VERY TYPE, COMPONENTS AND BUILDINGS SERVICED. COORDINATE FINAL RELOCATION AND/OR REMOVAL WITH ARCHITECT PRIOR TO WORK.

DEMOLITION KEYNOTES

KEY NOTE	DESCRIPTION
01	REMOVE (E) STORM DRAIN PIPE AND APPURTENANCES. SEE STORM DRAINAGE PLAN FOR IMPROVEMENTS.
02	REMOVE (E) SANITARY SEWER PIPE AND APPURTENANCES. SEE UTILITY PLAN FOR IMPROVEMENTS.
03	REMOVE (E) WATER PIPE AND APPURTENANCES. SEE UTILITY PLAN FOR IMPROVEMENTS.
04	REMOVE (E) IRRIGATION WATER LINE AND APPURTENANCES. SEE IRRIGATION PLANS FOR IMPROVEMENTS.
05	REMOVE (E) RETAINING OR BLOCK WALL AND FOOTING.
06	REMOVE (E) SIGN AND FOOTING.
07	REMOVE (E) CURB AND/OR GUTTER.
08	REMOVE (E) CONCRETE VALLEY GUTTER.
09	REMOVE (E) FENCE AND FOOTINGS. SEE LANDSCAPE PLANS FOR IMPROVEMENTS.
10	REMOVE (E) LIGHT STANDARD AND FOOTING. SEE ELECTRICAL PLANS FOR IMPROVEMENTS.
11	REMOVE (E) NATURAL GAS LINE AND APPURTENANCES. SEE PLUMBING PLANS FOR IMPROVEMENTS.
12	REMOVE (E) ELECTRICAL CONDUITS AND APPURTENANCES. SEE ELECTRICAL PLANS FOR DETAIL AND IMPROVEMENTS.
13	REMOVE (E) BOLLARD AND FOOTING.
14	REMOVE (E) STRIPING AND/OR WHEEL STOP.
15	RAIN WATER LEADER: REMOVE (E) UG PIPING FOR FUTURE RECONNECTION. SEE STORM DRAIN PLANS FOR IMPROVEMENTS.
16	REMOVE (E) SIGN POST, SIGNAGE, AND FOOTING.

PROTECTION KEYNOTES

KEY NOTE	DESCRIPTION
50	PROTECT (E) BUILDING, FOUNDATION AND OTHER STRUCTURAL FEATURES AND BUILDING UTILITIES.
51	PROTECT (E) CANOPY AND COLUMNS, AND OTHER STRUCTURAL FEATURES AND CANOPY UTILITIES.
52	PROTECT (E) CONCRETE PAVEMENT/SIDEWALK.
53	PROTECT (E) AC PAVEMENT.
54	PROTECT (E) STORM DRAIN FACILITIES. PROVIDE TEMPORARY PLUGS WHERE INLETS ARE TO REMAIN WITH PIPES REMOVED. COORDINATE WITH (N) SD IMPROVEMENTS.
55	PROTECT (E) SANITARY SEWER FACILITIES.
56	PROTECT (E) WATER SERVICE FACILITIES.
57	PROTECT (E) IRRIGATION FACILITIES. VERIFY EXTENTS TO REMAIN WITH IRRIGATION CONSULTANT.
58	PROTECT (E) CURB AND/OR GUTTER.
59	PROTECT (E) BOLLARD.
60	PROTECT (E) RETAINING WALL.
61	PROTECT (E) MONUMENT AND/OR SIGN POST.
62	PROTECT (E) FENCING, GATES, POSTS, AND SIGNAGE, INCLUDING EXISTING ELECTRICAL POWER TO AUTOMATIC GATES (FIELD VERIFY POWER CONDUITS, ETC.).
63	PROTECT (E) ELECTRICAL FACILITIES.
64	PROTECT (E) UTILITY POLE AND CONDUIT.
65	PROTECT (E) GAS FACILITIES.
66	SALVAGE (E) LIGHT POLE FOR FUTURE REINSTALLATION.
67	SALVAGE (E) WHEEL STOP(S) FOR FUTURE REINSTALLATION.
68	PROTECT (E) FOUNDATION DURING UTILITY REMOVAL AND CONSTRUCTION ACTIVITY IN ACCORDANCE WITH 1809A.14.

IDENTIFICATION STAMP
DIV. OF THE STATE ARCHITECT
APP: 02-119490 INC:
REVIEWED FOR
SS ☑ FLS ☑ ACS ☑
DATE: 09/13/2022

LPA

ARCHITECTURE ENGINEERING INTERIORS
LANDSCAPE ARCHITECTURE PLANNING

916-287-2400 Office

916-287-2401 Fax

LPADesignStudios.com

431 I Street,
Suite 107
Sacramento, California 95814

REGISTERED PROFESSIONAL ENGINEER
KATHLEEN M. SHINKAI
R.C.E. 68369
EXP. 9-30-23
CIVIL
STATE OF CALIFORNIA

This document and all other project documents, ideas, aesthetics and designs incorporated therein are instruments of service. All project documents are copyright protected, are the property of LPA, Inc. (LPA) and cannot be lawfully used in whole or in part for any project or purpose except as set forth in the contractual agreement between LPA and its Client. The unauthorized disclosure and/or use of the project documents (including the creation of derivative works), may give rise to liability for copyright infringement, unlawful disclosure, use or misappropriation of property rights held by LPA. The unauthorized use of the project documents will give rise to the recovery of monetary losses and damages including attorney fees and costs for which the unauthorized user will be held liable.
Project documents describe the design intent of the work and are not a representation of as-built or existing conditions. LPA is not responsible for any discrepancies between the project documents and the existing conditions.

© LPA, Inc.

DAVIS HIGH SCHOOL
AQUATICS CENTER
315 WEST 14TH ST, DAVIS, CA 95616

Developed for
DAVIS JOINT UNIFIED SCHOOL DISTRICT

Revision	Date

Submittal	Date
50% DD REVIEW	06/15/2021
100% DESIGN DEVELOPMENT	07/26/2021
50% CD REVIEW	10/08/2021
100% CD DSA SUBMITTAL	10/22/2021
DSA SUBMITTAL	03/24/2022

Job Number	19044.13
Date Published	03/24/2022
Checked By	K. SHINKAI
Scale	1" = 10'

DEMOLITION PLAN

C1.04

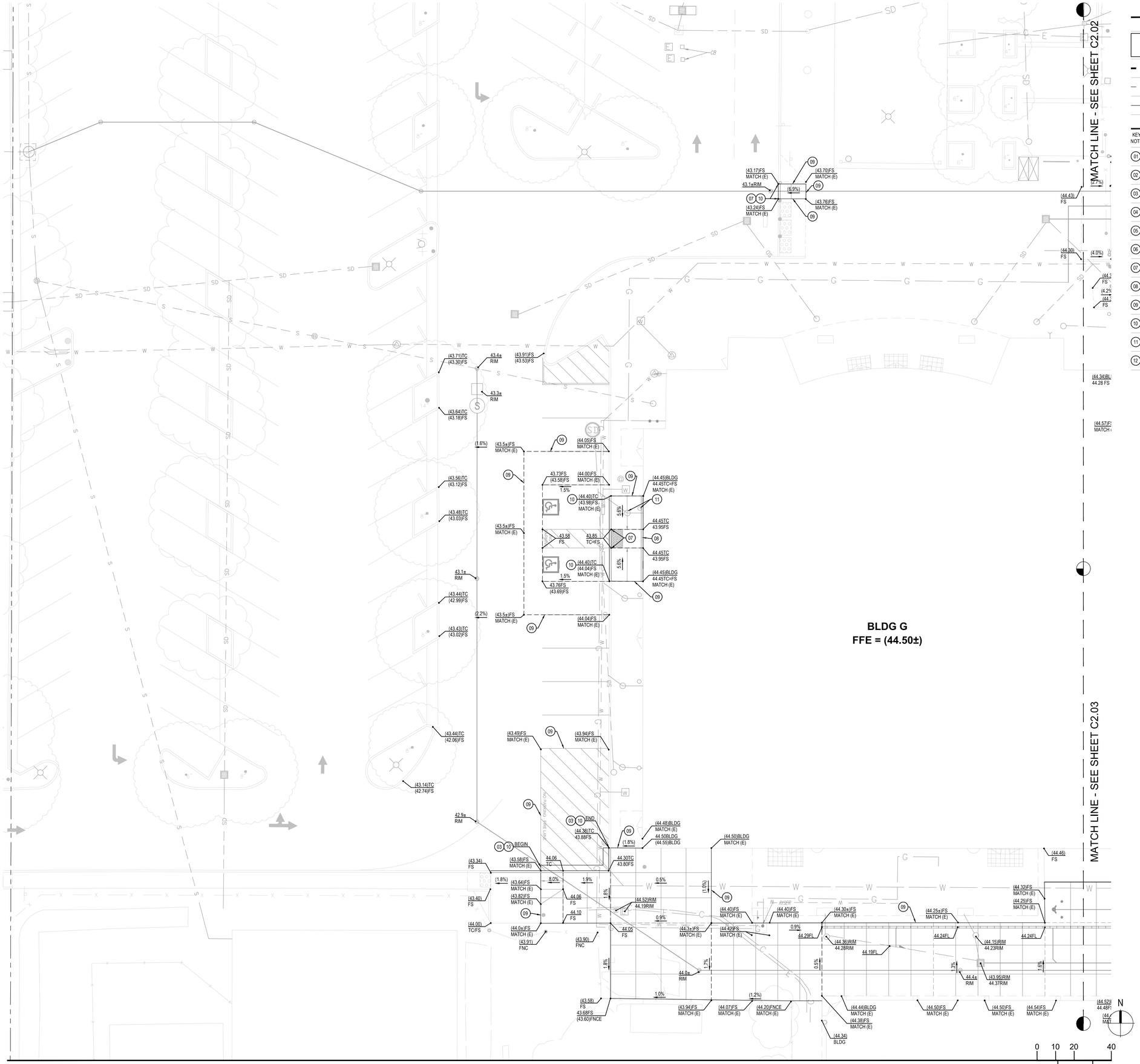

LEGEND

SYMBOL	DESCRIPTION
PA	PLANTING AREA SEE LANDSCAPE PLAN DETAILS FOR GRADES ADJACENT TO HARDSCAPE.
— — — —	APPROXIMATE LIMIT OF WORK.
— —GB— —	GRADE BREAK.
—— · · ——> ——	FLOWLINE.

GRADING CONSTRUCTION NOTES

KEY NOTE	DESCRIPTION
01	CONSTRUCT CONCRETE CURB AT STEEL FENCE PER LANDSCAPING DETAILS.
02	CONSTRUCT CONCRETE FREESTANDING WALL PER LANDSCAPING DETAILS. HEIGHT PER PLAN.
03	CONSTRUCT WEDGE CURB PER DETAIL 04 SHEET C7.02.
04	CONSTRUCT VALLEY GUTTER PER DETAIL 03 SHEET C7.02.
05	CONSTRUCT CURB AND GUTTER PER DETAIL 08 SHEET C7.02.
06	CONSTRUCT MODIFIED VALLEY GUTTER PER DETAIL 07 SHEET C7.02.
07	CONSTRUCT FLUSH CURB PER DETAIL 16 SHEET C7.02.
08	CONSTRUCT VERTICAL CURB PER DETAIL 20 SHEET C7.02.
09	JOIN EXISTING PAVEMENT AND MATCH EXISTING GRADE.
10	JOIN EXISTING CURB AND/OR GUTTER AND MATCH GRADE.
11	ADJUST EXISTING UTILITY RIM AND RISER TO FINISHED GRADE.
12	VERIFY PAD GRADE PRIOR TO CONSTRUCTION. SEE STRUCTURAL FOUNDATION PLAN SHEETS S2.11 AND S2.12.

IDENTIFICATION STAMP
DIV. OF THE STATE ARCHITECT
APP: 02-119490 INC:
REVIEWED FOR
SS ☑ FLS ☑ ACS ☑
DATE: 09/13/2022

LPA
ARCHITECTURE ENGINEERING INTERIORS
LANDSCAPE ARCHITECTURE PLANNING

916-287-2400 Office
916-287-2401 Fax
LPADesignStudios.com
431 I Street,
Suite 107
Sacramento, California 95814

REGISTERED PROFESSIONAL ENGINEER
KATHLEEN M. SHINKAI
R.C.E. 68369
EXP. 9-30-23
CIVIL
STATE OF CALIFORNIA

This document and all other project documents, ideas, aesthetics and designs incorporated therein are instruments of service. All project documents are copyright protected, are the property of LPA, Inc. (LPA) and cannot be lawfully used in whole or in part for any project or purpose except as set forth in the contractual agreement between LPA and its Client. The unauthorized disclosure and/or use of the project documents (including the creation of derivative works), may give rise to liability for copyright infringement, unlawful disclosure, use or misappropriation of property rights held by LPA. The unauthorized use of the project documents will give rise to the recovery of monetary losses and damages including attorney fees and costs for which the unauthorized user will be held liable.
Project documents describe the design intent of the work and are not a representation of as-built or existing conditions. LPA is not responsible for any discrepancies between the project documents and the existing conditions.

© LPA, Inc.

DAVIS HIGH SCHOOL
AQUATICS CENTER
315 WEST 14TH ST, DAVIS, CA 95616

Developed for
DAVIS JOINT UNIFIED SCHOOL DISTRICT

Revision	Date

Submittal	Date
50% DD REVIEW	06/15/2021
100% DESIGN DEVELOPMENT	07/26/2021
50% CD REVIEW	10/08/2021
100% CD DSA SUBMITTAL	10/22/2021
DSA SUBMITTAL	03/24/2022

Job Number	19044.13
Date Published	03/24/2022
Checked By	K. SHINKAI
Scale	1" = 10'

GRADING PLAN

C2.01

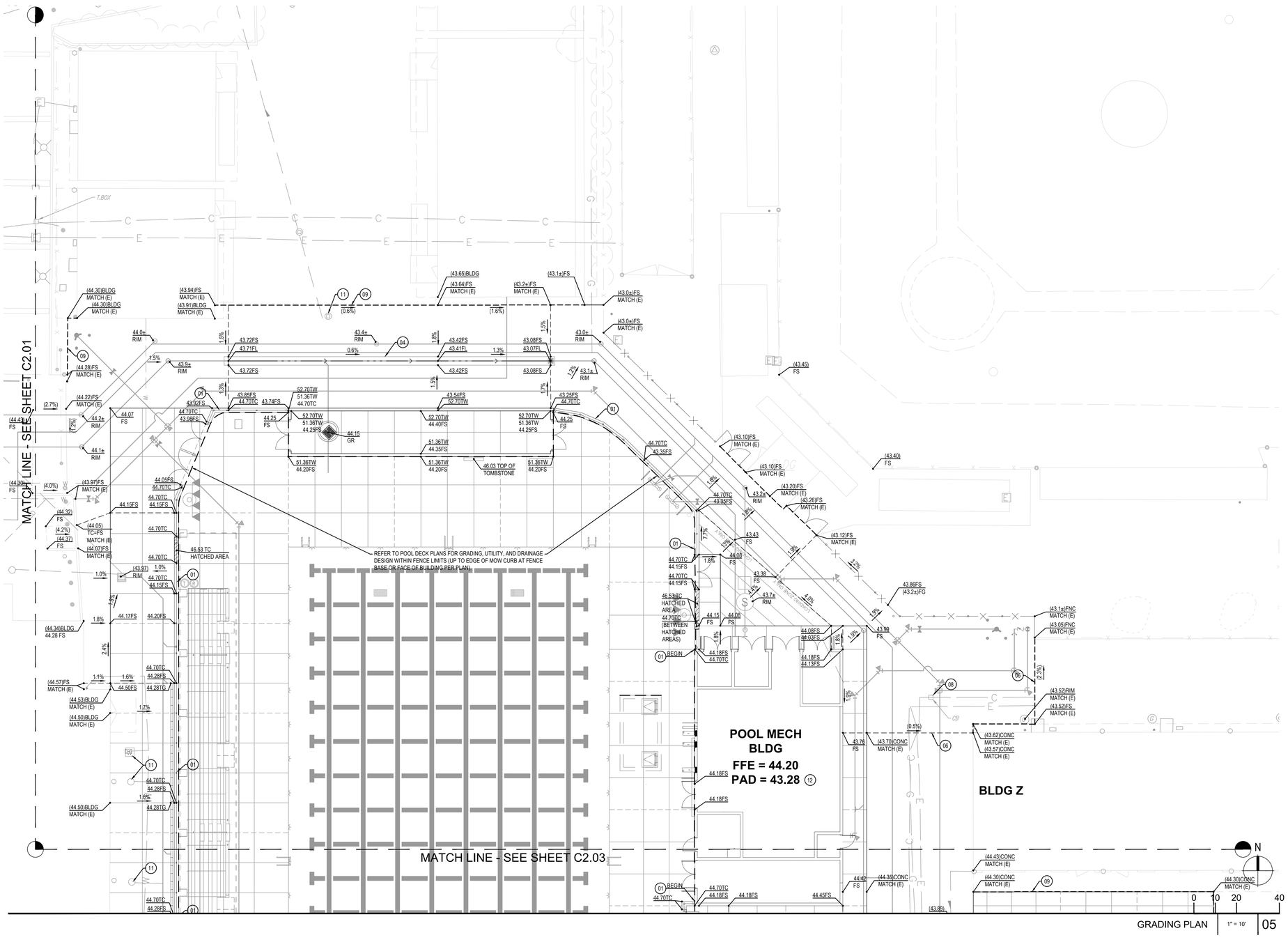

LEGEND

SYMBOL	DESCRIPTION
PA	PLANTING AREA SEE LANDSCAPE PLAN DETAILS FOR GRADES ADJACENT TO HARDSCAPE.
	APPROXIMATE LIMIT OF WORK.
GB	GRADE BREAK.
	FLOWLINE.

GRADING CONSTRUCTION NOTES

KEY NOTE	DESCRIPTION
01	CONSTRUCT CONCRETE CURB AT STEEL FENCE PER LANDSCAPING DETAILS.
02	CONSTRUCT CONCRETE FREESTANDING WALL PER LANDSCAPING DETAILS. HEIGHT PER PLAN.
03	CONSTRUCT WEDGE CURB PER DETAIL 04 SHEET C7.02.
04	CONSTRUCT VALLEY GUTTER PER DETAIL 03 SHEET C7.02.
05	CONSTRUCT CURB AND GUTTER PER DETAIL 08 SHEET C7.02.
06	CONSTRUCT MODIFIED VALLEY GUTTER PER DETAIL 07 SHEET C7.02.
07	CONSTRUCT FLUSH CURB PER DETAIL 16 SHEET C7.02.
08	CONSTRUCT VERTICAL CURB PER DETAIL 20 SHEET C7.02.
09	JOIN EXISTING PAVEMENT AND MATCH EXISTING GRADE.
10	JOIN EXISTING CURB AND/OR GUTTER AND MATCH GRADE.
11	ADJUST EXISTING UTILITY RIM AND RISER TO FINISHED GRADE.
12	VERIFY PAD GRADE PRIOR TO CONSTRUCTION. SEE STRUCTURAL FOUNDATION PLAN SHEETS S2.11 AND S2.12.

IDENTIFICATION STAMP
DIV. OF THE STATE ARCHITECT
APP: 02-119490 INC:
REVIEWED FOR
SS ☑ FLS ☑ ACS ☑
DATE: 09/13/2022

LPA

ARCHITECTURE ENGINEERING INTERIORS
LANDSCAPE ARCHITECTURE PLANNING

916-287-2400 Office
916-287-2401 Fax
LPADesignStudios.com
431 I Street,
Suite 107
Sacramento, California 95814

REGISTERED PROFESSIONAL ENGINEER
KATHLEEN M. SHINKAI
R.C.E. 68369
EXP. 9-30-23
CIVIL
STATE OF CALIFORNIA

This document and all other project documents, ideas, aesthetics and designs incorporated therein are instruments of service. All project documents are copyright protected, are the property of LPA, Inc. (LPA) and cannot be lawfully used in whole or in part for any project or purpose except as set forth in the contractual agreement between LPA and its Client. The unauthorized disclosure and/or use of the project documents (including the creation of derivative works), may give rise to liability for copyright infringement, unlawful disclosure, use or misappropriation of property rights held by LPA. The unauthorized use of the project documents will give rise to the recovery of monetary losses and damages including attorney fees and costs for which the unauthorized user will be held liable.
Project documents describe the design intent of the work and are not a representation of as-built or existing conditions. LPA is not responsible for any discrepancies between the project documents and the existing conditions.

© LPA, Inc.

DAVIS HIGH SCHOOL
AQUATICS CENTER
315 WEST 14TH ST, DAVIS, CA 95616

Developed for
DAVIS JOINT UNIFIED SCHOOL DISTRICT

Revision	Date

Submittal	Date
50% DD REVIEW	06/15/2021
100% DESIGN DEVELOPMENT	07/26/2021
50% CD REVIEW	10/08/2021
100% CD DSA SUBMITTAL	10/22/2021
DSA SUBMITTAL	09/24/2022

Job Number	19044.13
Date Published	03/24/2022
Checked By	K. SHINKAI
Scale	1" = 10'

GRADING PLAN

C2.02

LEGEND

SYMBOL	DESCRIPTION
PA	PLANTING AREA SEE LANDSCAPE PLAN DETAILS FOR GRADES ADJACENT TO HARDSCAPE.
— — —	APPROXIMATE LIMIT OF WORK.
— —GB— —	GRADE BREAK.
—— · · · ——› ——	FLOWLINE.

GRADING CONSTRUCTION NOTES

KEY NOTE	DESCRIPTION
01	CONSTRUCT CONCRETE CURB AT STEEL FENCE PER LANDSCAPING DETAILS.
02	CONSTRUCT CONCRETE FREESTANDING WALL PER LANDSCAPING DETAILS. HEIGHT PER PLAN.
03	CONSTRUCT WEDGE CURB PER DETAIL 04 SHEET C7.02.
04	CONSTRUCT VALLEY GUTTER PER DETAIL 03 SHEET C7.02.
05	CONSTRUCT CURB AND GUTTER PER DETAIL 08 SHEET C7.02.
06	CONSTRUCT MODIFIED VALLEY GUTTER PER DETAIL 07 SHEET C7.02.
07	CONSTRUCT FLUSH CURB PER DETAIL 16 SHEET C7.02.
08	CONSTRUCT VERTICAL CURB PER DETAIL 20 SHEET C7.02.
09	JOIN EXISTING PAVEMENT AND MATCH EXISTING GRADE.
10	JOIN EXISTING CURB AND/OR GUTTER AND MATCH GRADE.
11	ADJUST EXISTING UTILITY RIM AND RISER TO FINISHED GRADE.
12	VERIFY PAD GRADE PRIOR TO CONSTRUCTION. SEE STRUCTURAL FOUNDATION PLAN SHEETS S2.11 AND S2.12.

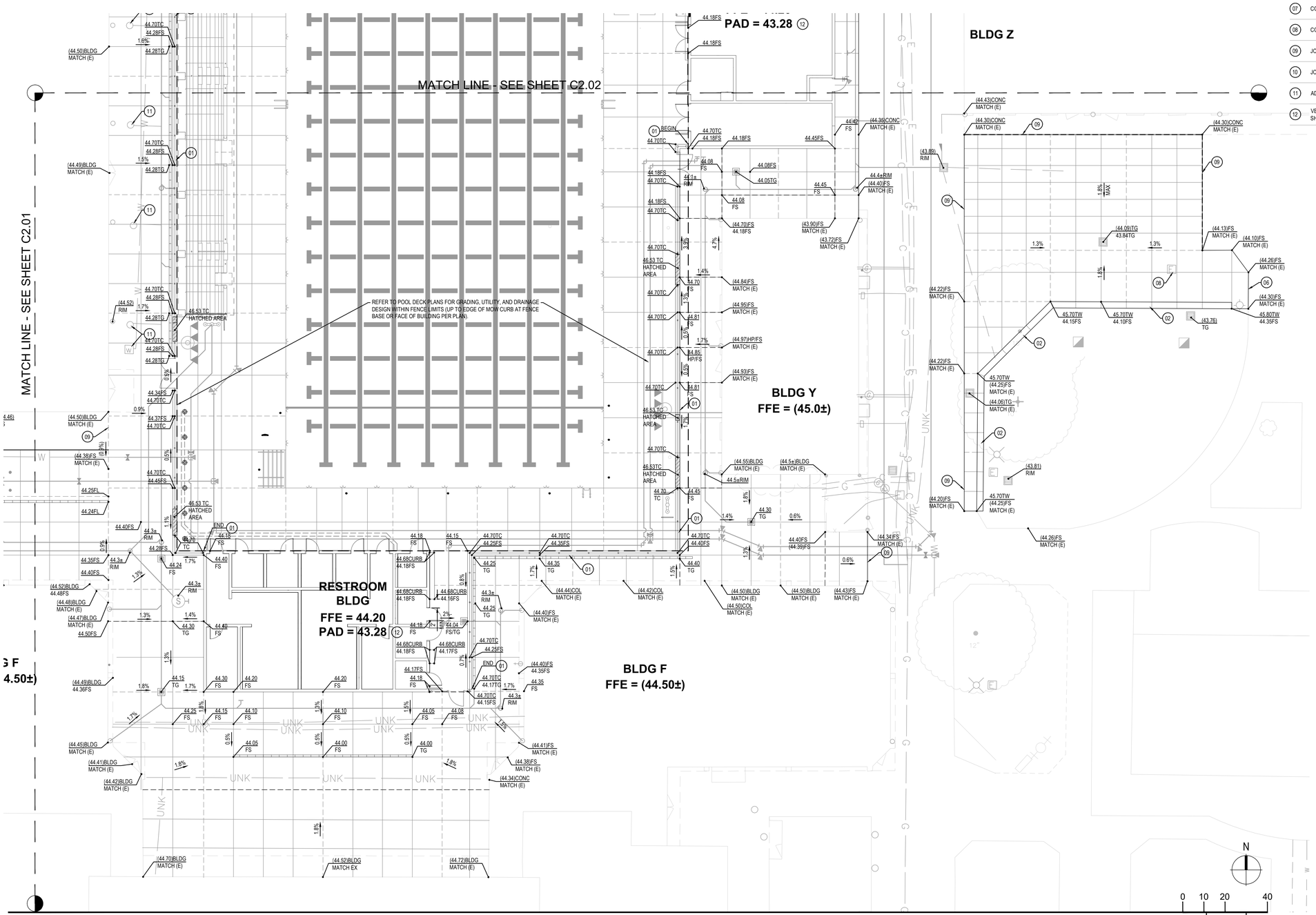

GRADING PLAN 1" = 10' 05

IDENTIFICATION STAMP
DIV. OF THE STATE ARCHITECT
APP: 02-119490 INC:
REVIEWED FOR
SS ☑ FLS ☑ ACS ☑
DATE: 09/13/2022

LPA
ARCHITECTURE ENGINEERING INTERIORS
LANDSCAPE ARCHITECTURE PLANNING

916-287-2400 Office
916-287-2401 Fax
LPADesignStudios.com
431 I Street,
Suite 107
Sacramento, California 95814

REGISTERED PROFESSIONAL ENGINEER
KATHLEEN M. SHINKAI
R.C.E. 68369
EXP. 9-30-23
CIVIL
STATE OF CALIFORNIA

This document and all other project documents, ideas, aesthetics and designs incorporated therein are instruments of service. All project documents are copyright protected, are the property of LPA, Inc. (LPA) and cannot be lawfully used in whole or in part for any project or purpose except as set forth in the contractual agreement between LPA and its Client. The unauthorized disclosure and/or use of the project documents (including the creation of derivative works), may give rise to liability for copyright infringement, unlawful disclosure, use or misappropriation of property rights held by LPA. The unauthorized use of the project documents will give rise to the recovery of monetary losses and damages including attorney fees and costs for which the unauthorized user will be held liable.
Project documents describe the design intent of the work and are not a representation of as-built or existing conditions. LPA is not responsible for any discrepancies between the project documents and the existing conditions.

© LPA, Inc.

DAVIS HIGH SCHOOL
AQUATICS CENTER
315 WEST 14TH ST, DAVIS, CA 95616

Developed for
DAVIS JOINT UNIFIED SCHOOL DISTRICT

Revision	Date

Submittal	Date
50% DD REVIEW	06/15/2021
100% DESIGN DEVELOPMENT	07/26/2021
50% CD REVIEW	10/08/2021
100% CD DSA SUBMITTAL	10/22/2021
DSA SUBMITTAL	03/24/2022

Job Number	19044.13
Date Published	03/24/2022
Checked By	K. SHINKAI
Scale	1" = 10'

GRADING PLAN

C2.03

LEGEND

SYMBOL	DESCRIPTION
PA	PLANTING AREA SEE LANDSCAPE PLAN DETAILS FOR GRADES ADJACENT TO HARDSCAPE.
— — — —	APPROXIMATE LIMIT OF WORK.
— —GB— —	GRADE BREAK.
—— - - - ——> ——	FLOWLINE.

GRADING CONSTRUCTION NOTES

KEY NOTE	DESCRIPTION
01	CONSTRUCT CONCRETE CURB AT STEEL FENCE PER LANDSCAPING DETAILS.
02	CONSTRUCT CONCRETE FREESTANDING WALL PER LANDSCAPING DETAILS. HEIGHT PER PLAN.
03	CONSTRUCT WEDGE CURB PER DETAIL 04 SHEET C7.02.
04	CONSTRUCT VALLEY GUTTER PER DETAIL 03 SHEET C7.02.
05	CONSTRUCT CURB AND GUTTER PER DETAIL 08 SHEET C7.02.
06	CONSTRUCT MODIFIED VALLEY GUTTER PER DETAIL 07 SHEET C7.02.
07	CONSTRUCT FLUSH CURB PER DETAIL 16 SHEET C7.02.
08	CONSTRUCT VERTICAL CURB PER DETAIL 20 SHEET C7.02.
09	JOIN EXISTING PAVEMENT AND MATCH EXISTING GRADE.
10	JOIN EXISTING CURB AND/OR GUTTER AND MATCH GRADE.
11	ADJUST EXISTING UTILITY RIM AND RISER TO FINISHED GRADE.
12	VERIFY PAD GRADE PRIOR TO CONSTRUCTION. SEE STRUCTURAL FOUNDATION PLAN SHEETS S2.11 AND S2.12.

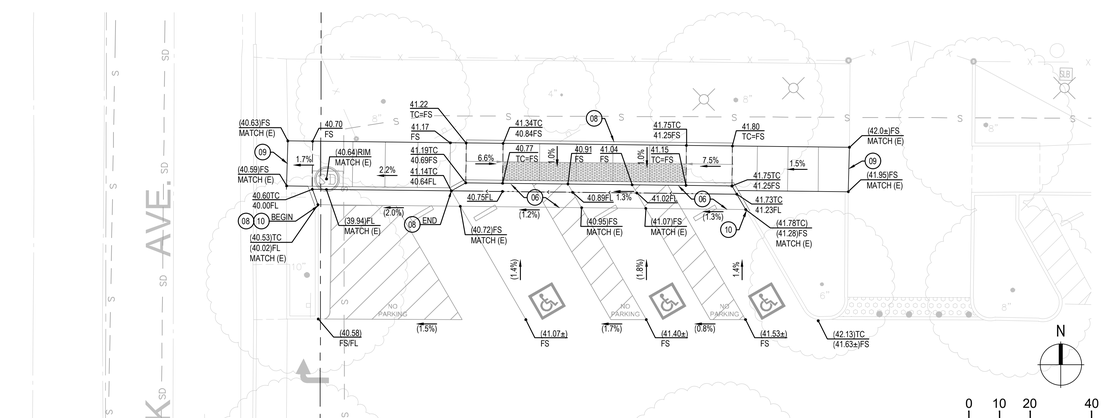

GRADING PLAN | 1" = 10' | 05

IDENTIFICATION STAMP
DIV. OF THE STATE ARCHITECT
APP: 02-119490 INC:
REVIEWED FOR
SS ☑ FLS ☑ ACS ☑
DATE: 09/13/2022

LPA

ARCHITECTURE ENGINEERING INTERIORS
LANDSCAPE ARCHITECTURE PLANNING

916-287-2400 Office

916-287-2401 Fax

LPADesignStudios.com

431 I Street,
Suite 107
Sacramento, California 95814

REGISTERED PROFESSIONAL ENGINEER
KATHLEEN M. SHINAI
R.C.E. 68369
EXP. 9-30-23
CIVIL
STATE OF CALIFORNIA

This document and all other project documents, ideas, aesthetics and designs incorporated therein are instruments of service. All project documents are copyright protected, are the property of LPA, Inc. (LPA) and cannot be lawfully used in whole or in part for any project or purpose except as set forth in the contractual agreement between LPA and its Client. The unauthorized disclosure and/or use of the project documents (including the creation of derivative works), may give rise to liability for copyright infringement, unlawful disclosure, use or misappropriation of property rights held by LPA. The unauthorized use of the project documents will give rise to the recovery of monetary losses and damages including attorney fees and costs for which the unauthorized user will be held liable.
Project documents describe the design intent of the work and are not a representation of as-built or existing conditions. LPA is not responsible for any discrepancies between the project documents and the existing conditions.

© LPA, Inc.

DAVIS HIGH SCHOOL
AQUATICS CENTER
315 WEST 14TH ST, DAVIS, CA 95616

Developed for
DAVIS JOINT UNIFIED SCHOOL DISTRICT

Revision	Date

Submittal	Date
50% DD REVIEW	06/15/2021
100% DESIGN DEVELOPMENT	07/26/2021
50% CD REVIEW	10/08/2021
100% CD DSA SUBMITTAL	10/22/2021
DSA SUBMITTAL	03/24/2022

Job Number	19044.13
Date Published	03/24/2022
Checked By	K. SHINKAI
Scale	1" = 10'

GRADING PLAN

C2.04

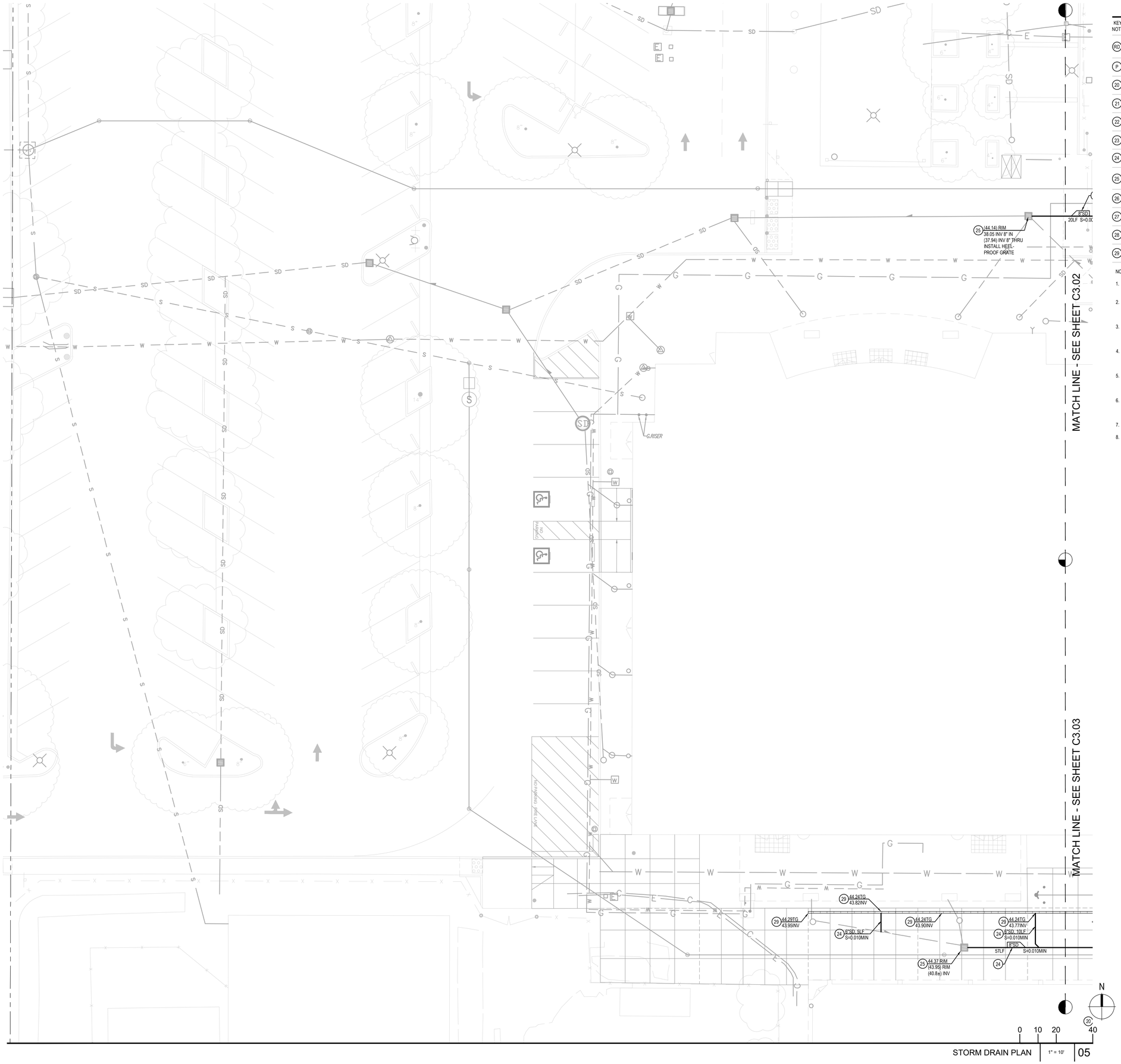

STORM DRAIN CONSTRUCTION NOTES

KEY NOTE	DESCRIPTION
RD	ROOF DRAIN POINT OF CONNECTION. SUPPLY AND INSTALL ROOF DRAIN LATERAL STUBBED 5 FT. FROM FACE OF BUILDING WITH A SLOPE 0.020 MIN. PLUG AND MARK END. COORDINATE EXACT LOCATION WITH PLUMBING PLANS.
P	POINT OF CONNECTION TO (N) POOL DECK DRAINAGE SYSTEM. REFER TO POOL DECK DESIGN FOR DETAILS AND CONTINUATION.
20	CONNECT (N) PVC PIPING TO (E) ROOF DRAIN PIPING AT LOCATION SHOWN. FIELD-VERIFY (E) PIPE LOCATION AND INVERT PRIOR TO CONNECTION.
21	SUPPLY AND INSTALL ROUND CAST IRON AREA DRAIN. SEE DETAIL 14 SHEET C7.01.
22	SUPPLY AND INSTALL 12"X12" PRECAST CONCRETE DRAIN INLET. SEE DETAIL 12 SHEET C7.01.
23	SUPPLY AND INSTALL STORM DRAIN CLEAN OUT. SEE DETAIL 10 SHEET C7.01.
24	SUPPLY AND INSTALL PVC STORM DRAIN, 4" DIAMETER AT SLOPE = 1% MIN U.N.O. PER PLAN.
25	CONNECT TO (E) STORM DRAIN INLET. CONTRACTOR TO VERIFY (E) EXIST ELEVATION AND LOCATION. NOTIFY ENGINEER OF ANY DISCREPANCIES PRIOR TO CONSTRUCTION. REPLACE (E) GRATE WITH HEEL-PROOF GRATE WHERE NOTED.
26	SUPPLY AND INSTALL CONTECH STORMFILTER, MODEL SFMH48, PER DETAIL 03 SHEET C7.03.
27	CONNECT (N) PVC PIPE TO RAINWATER LEADER DOWNSPOUT. REFER TO ARCHITECTURAL AND PLUMBING PLANS FOR PIPING CONTINUATION AT COLUMN.
28	INTERCEPT (E) UG ROOF DRAIN LEADER PIPING AND CONNECT TO (N) STORM DRAIN PIPE AT LOCATION NOTED.
29	SUPPLY AND INSTALL TRENCH DRAIN. SEE DETAIL 04 SHEET C7.01.

NOTES:

1. UTILITIES TO CROSS OVER OR UNDER OTHER UTILITIES TO MAINTAIN 12" MINIMUM CLEARANCE AT UTILITY CROSSINGS, UNLESS NOTED OTHERWISE.
2. CONTRACTOR SHALL VERIFY SIZE AND LOCATION (HORIZONTAL AND VERTICAL) OF EXISTING CROSSING AND JOINING UTILITIES PRIOR TO CONSTRUCTION AND IMMEDIATELY NOTIFY THE ENGINEER OF ANY CONFLICT.
3. CONTRACTOR SHALL CONSTRUCT GRAVITY UTILITIES (SEWER AND STORM DRAIN) BEFORE OTHER UTILITIES. CONSTRUCTION OF THESE GRAVITY UTILITIES TO START FROM THE DOWNSTREAM ENDS.
4. EXISTING UTILITIES ARE COMPILED BASED ON PREVIOUS BASE FILES, FIELD SURVEY AND FIELD VERIFICATION. POTHOLING IS RECOMMENDED TO VERIFY ANY AND ALL UTILITIES KNOWN OR UNKNOWN WHICH MAY BE IN CONFLICT WITH PROPOSED CONSTRUCTION.
5. PRIOR TO THE REMOVAL OF ANY WET OR DRY UTILITY LINES, THE CONTRACTOR SHALL CONFIRM WITH OWNER REPRESENTATIVE WHETHER THESE UTILITY LINES ARE STILL ACTIVE OR NOT. IMMEDIATELY NOTIFY THE ENGINEER OF ANY CONFLICT.
6. CONTRACTOR TO ADJUST TO FINISHED GRADE ALL EXISTING UTILITY BOXES, STORM DRAIN CLEANOUT COVERS, PULL BOXES AND VALVE COVERS NOT SPECIFICALLY SHOWN WITHIN THE LIMITS OF WORK.
7. SEE DETAIL 01 SHEET C7.01 FOR UTILITY TRENCHING AND BACKFILL.
8. ALL PRECAST DRAIN INLETS TO HAVE AN APPROVED "NO DUMPING DRAINS TO WETLAND" 3" X 5¾" ROUNDED CORNERED RECTANGLES STYLE #NDO OR 4" DIAMETER ROUND STYLE #SDO ABRASION AND UV RESISTANT DURACAST STYLE MARKER BY DAS MANUFACTURING OR EQUIVALENT APPLIED TO THE CONCRETE COLLAR AROUND DRAIN INLET USING RAPID SET URETHANE ADHESIVE OR QUICKSTIK EPOXY PUTTY ADHESIVE PER MANUFACTURER'S RECOMMENDATIONS AND SPECIFICATIONS. http://www.dasmanufacturing.com/product_guide.html

IDENTIFICATION STAMP
DIV. OF THE STATE ARCHITECT
APP: 02-119490 INC:
REVIEWED FOR
SS ☑ FLS ☑ ACS ☑
DATE: 09/13/2022

LPA
ARCHITECTURE ENGINEERING INTERIORS
LANDSCAPE ARCHITECTURE PLANNING
916-287-2400 Office
916-287-2401 Fax
LPADesignStudios.com
431 I Street,
Suite 107
Sacramento, California 95814

REGISTERED PROFESSIONAL ENGINEER
KATHLEEN M. SHINKAI
R.C.E. 68369
EXP. 9-30-23
CIVIL
STATE OF CALIFORNIA

This document and all other project documents, ideas, aesthetics and designs incorporated therein are instruments of service. All project documents are copyright protected, are the property of LPA, Inc. (LPA) and cannot be lawfully used in whole or in part for any project or purpose except as set forth in the contractual agreement between LPA and its Client. The unauthorized disclosure and/or use of the project documents (including the creation of derivative works), may give rise to liability for copyright infringement, unlawful disclosure, use or misappropriation of property rights held by LPA. The unauthorized use of the project documents will give rise to the recovery of monetary losses and damages including attorney fees and costs for which the unauthorized user will be held liable.
Project documents describe the design intent of the work and are not a representation of as-built or existing conditions. LPA is not responsible for any discrepancies between the project documents and the existing conditions.

© LPA, Inc.

DAVIS HIGH SCHOOL
AQUATICS CENTER
315 WEST 14TH ST, DAVIS, CA 95616

Developed for
DAVIS JOINT UNIFIED SCHOOL DISTRICT

Revision	Date

Submittal	Date
50% DD REVIEW	06/15/2021
100% DESIGN DEVELOPMENT	07/26/2021
50% CD REVIEW	10/08/2021
100% CD DSA SUBMITTAL	10/22/2021
DSA SUBMITTAL	02/24/2022

Job Number	19044.13
Date Published	03/24/2022
Checked By	K. SHINKAI
Scale	1" = 10'

STORM DRAIN PLAN

C3.01

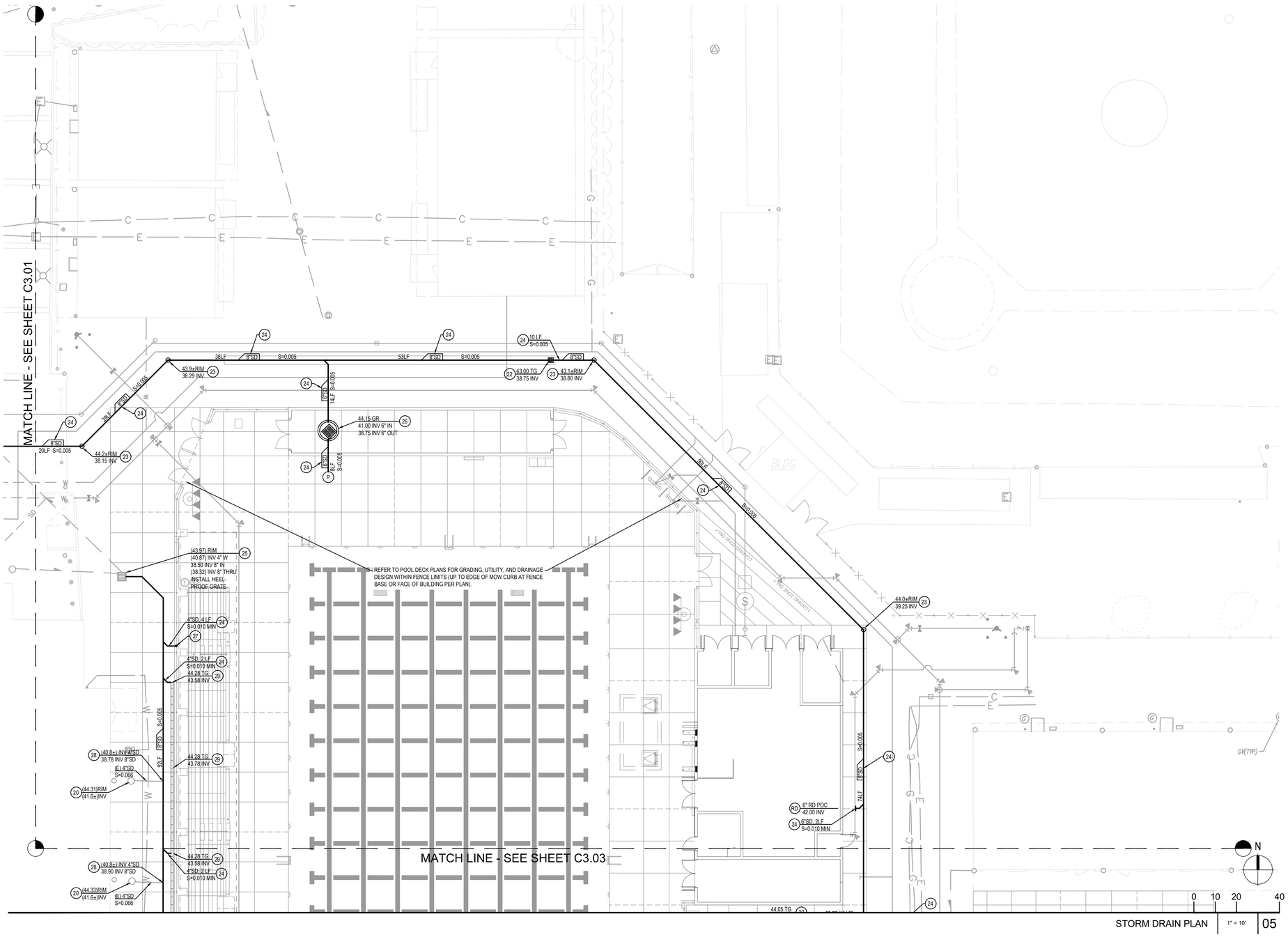

STORM DRAIN PLAN | 1" = 10' | 05

STORM DRAIN CONSTRUCTION NOTES

KEY NOTE	DESCRIPTION
RD	ROOF DRAIN POINT OF CONNECTION. SUPPLY AND INSTALL ROOF DRAIN LATERAL STUBBED 5 FT. FROM FACE OF BUILDING WITH A SLOPE 0.020 MIN. PLUG AND MARK END. COORDINATE EXACT LOCATION WITH PLUMBING PLANS.
P	POINT OF CONNECTION TO (N) POOL DECK DRAINAGE SYSTEM. REFER TO POOL DECK DESIGN FOR DETAILS AND CONTINUATION.
20	CONNECT (N) PVC PIPING TO (E) ROOF DRAIN PIPING AT LOCATION SHOWN. FIELD-VERIFY (E) PIPE LOCATION AND INVERT PRIOR TO CONNECTION.
21	SUPPLY AND INSTALL ROUND CAST IRON AREA DRAIN. SEE DETAIL 14 SHEET C7.01.
22	SUPPLY AND INSTALL 12"X12" PRECAST CONCRETE DRAIN INLET. SEE DETAIL 12 SHEET C7.01.
23	SUPPLY AND INSTALL STORM DRAIN CLEAN OUT. SEE DETAIL 10 SHEET C7.01.
24	SUPPLY AND INSTALL PVC STORM DRAIN, 4" DIAMETER AT SLOPE = 1% MIN U.N.O. PER PLAN.
25	CONNECT TO (E) STORM DRAIN INLET. CONTRACTOR TO VERIFY (E) EXIST ELEVATION AND LOCATION. NOTIFY ENGINEER OF ANY DISCREPANCIES PRIOR TO CONSTRUCTION. REPLACE (E) GRATE WITH HEEL-PROOF GRATE WHERE NOTED.
26	SUPPLY AND INSTALL CONTECH STORMFILTER, MODEL SFMH48, PER DETAIL 03 SHEET C7.03.
27	CONNECT (N) PVC PIPE TO RAINWATER LEADER DOWNSPOUT. REFER TO ARCHITECTURAL AND PLUMBING PLANS FOR PIPING CONTINUATION AT COLUMN.
28	INTERCEPT (E) UG ROOF DRAIN LEADER PIPING AND CONNECT TO (N) STORM DRAIN PIPE AT LOCATION NOTED.
29	SUPPLY AND INSTALL TRENCH DRAIN. SEE DETAIL 04 SHEET C7.01.

NOTES:

1. UTILITIES TO CROSS OVER OR UNDER OTHER UTILITIES TO MAINTAIN 12" MINIMUM CLEARANCE AT UTILITY CROSSINGS, UNLESS NOTED OTHERWISE.
2. CONTRACTOR SHALL VERIFY SIZE AND LOCATION (HORIZONTAL AND VERTICAL) OF EXISTING CROSSING AND JOINING UTILITIES PRIOR TO CONSTRUCTION AND IMMEDIATELY NOTIFY THE ENGINEER OF ANY CONFLICT.
3. CONTRACTOR SHALL CONSTRUCT GRAVITY UTILITIES (SEWER AND STORM DRAIN) BEFORE OTHER UTILITIES. CONSTRUCTION OF THESE GRAVITY UTILITIES TO START FROM THE DOWNSTREAM ENDS.
4. EXISTING UTILITIES ARE COMPILED BASED ON PREVIOUS BASE FILES, FIELD SURVEY AND FIELD VERIFICATION. POTHOLING IS RECOMMENDED TO VERIFY ANY AND ALL UTILITIES KNOWN OR UNKNOWN WHICH MAY BE IN CONFLICT WITH PROPOSED CONSTRUCTION.
5. PRIOR TO THE REMOVAL OF ANY WET OR DRY UTILITY LINES, THE CONTRACTOR SHALL CONFIRM WITH OWNER REPRESENTATIVE WHETHER THESE UTILITY LINES ARE STILL ACTIVE OR NOT. IMMEDIATELY NOTIFY THE ENGINEER OF ANY CONFLICT.
6. CONTRACTOR TO ADJUST TO FINISHED GRADE ALL EXISTING UTILITY BOXES, STORM DRAIN CLEANOUT COVERS, PULL BOXES AND VALVE COVERS NOT SPECIFICALLY SHOWN WITHIN THE LIMITS OF WORK.
7. SEE DETAIL 01 SHEET C7.01 FOR UTILITY TRENCHING AND BACKFILL.
8. ALL PRECAST DRAIN INLETS TO HAVE AN APPROVED "NO DUMPING DRAINS TO WETLAND" 3" X 5¼" ROUNDED CORNERED RECTANGLES STYLE #NDO OR 4" DIAMETER ROUND STYLE #SDO ABRASION AND UV RESISTANT DURACAST STYLE MARKER BY DAS MANUFACTURING OR EQUIVALENT APPLIED TO THE CONCRETE COLLAR AROUND DRAIN INLET USING RAPID SET URETHANE ADHESIVE OR QUICKSTIK EPOXY PUTTY ADHESIVE PER MANUFACTURER'S RECOMMENDATIONS AND SPECIFICATIONS. http://www.dasmanufacturing.com/product_guide.html

IDENTIFICATION STAMP
DIV. OF THE STATE ARCHITECT
APP: 02-119490 INC:
REVIEWED FOR
SS ☑ FLS ☑ ACS ☑
DATE: 09/13/2022

LPA
ARCHITECTURE ENGINEERING INTERIORS
LANDSCAPE ARCHITECTURE PLANNING
916-287-2400 Office
916-287-2401 Fax
LPADesignStudios.com
431 I Street,
Suite 107
Sacramento, California 95814

REGISTERED PROFESSIONAL ENGINEER
KATHLEEN M. SHINKAI
R.C.E. 68369
EXP. 9-30-23
CIVIL
STATE OF CALIFORNIA

This document and all other project documents, ideas, aesthetics and designs incorporated therein are instruments of service. All project documents are copyright protected, are the property of LPA, Inc. (LPA) and cannot be lawfully used in whole or in part for any project or purpose except as set forth in the contractual agreement between LPA and its Client. The unauthorized disclosure and/or use of the project documents (including the creation of derivative works), may give rise to liability for copyright infringement, unlawful disclosure, use or misappropriation of property rights held by LPA. The unauthorized use of the project documents will give rise to the recovery of monetary losses and damages including attorney fees and costs for which the unauthorized user will be held liable.
Project documents describe the design intent of the work and are not a representation of as-built or existing conditions. LPA is not responsible for any discrepancies between the project documents and the existing conditions.

© LPA, Inc.

DAVIS HIGH SCHOOL
AQUATICS CENTER
315 WEST 14TH ST, DAVIS, CA 95616

Developed for
DAVIS JOINT UNIFIED SCHOOL DISTRICT

Revision	Date

Submittal	Date
50% DD REVIEW	06/15/2021
100% DESIGN DEVELOPMENT	07/28/2021
50% CD REVIEW	10/08/2021
100% CD DSA SUBMITTAL	10/22/2021
DSA SUBMITTAL	03/24/2022

Job Number	19044.13
Date Published	03/24/2022
Checked By	K. SHINKAI
Scale	1" = 10'

STORM DRAIN PLAN

C3.02

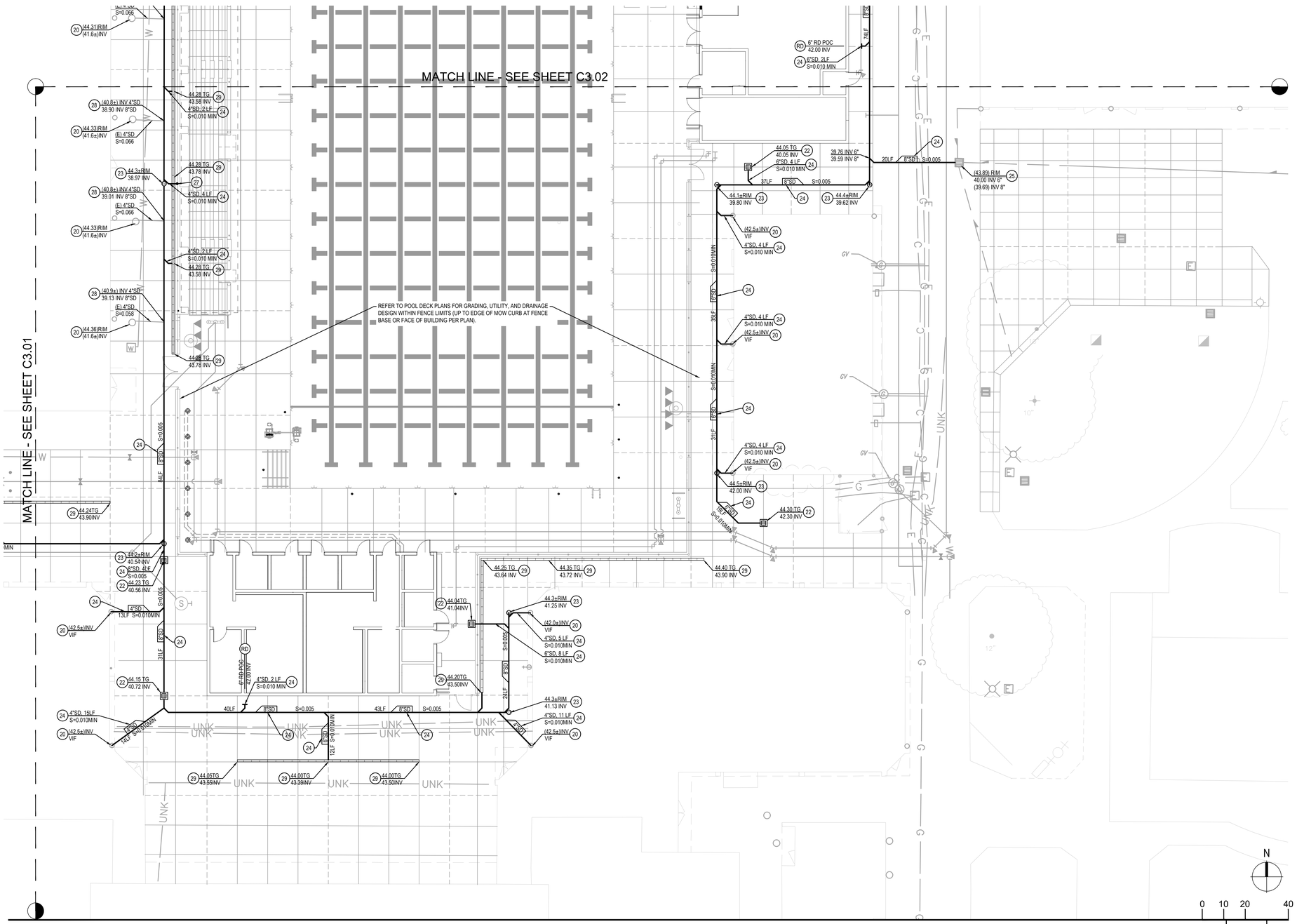

STORM DRAIN PLAN | 1" = 10' | 05

STORM DRAIN CONSTRUCTION NOTES

KEY NOTE	DESCRIPTION
RD	ROOF DRAIN POINT OF CONNECTION. SUPPLY AND INSTALL ROOF DRAIN LATERAL STUBBED 5 FT. FROM FACE OF BUILDING WITH A SLOPE 0.020 MIN. PLUG AND MARK END. COORDINATE EXACT LOCATION WITH PLUMBING PLANS.
P	POINT OF CONNECTION TO (N) POOL DECK DRAINAGE SYSTEM. REFER TO POOL DECK DESIGN FOR DETAILS AND CONTINUATION.
20	CONNECT (N) PVC PIPING TO (E) ROOF DRAIN PIPING AT LOCATION SHOWN. FIELD-VERIFY (E) PIPE LOCATION AND INVERT PRIOR TO CONNECTION.
21	SUPPLY AND INSTALL ROUND CAST IRON AREA DRAIN. SEE DETAIL 14 SHEET C7.01.
22	SUPPLY AND INSTALL 12"X12" PRECAST CONCRETE DRAIN INLET. SEE DETAIL 12 SHEET C7.01.
23	SUPPLY AND INSTALL STORM DRAIN CLEAN OUT. SEE DETAIL 10 SHEET C7.01.
24	SUPPLY AND INSTALL PVC STORM DRAIN, 4" DIAMETER AT SLOPE = 1% MIN U.N.O. PER PLAN.
25	CONNECT TO (E) STORM DRAIN INLET. CONTRACTOR TO VERIFY (E) EXIST ELEVATION AND LOCATION. NOTIFY ENGINEER OF ANY DISCREPANCIES PRIOR TO CONSTRUCTION. REPLACE (E) GRATE WITH HEEL-PROOF GRATE WHERE NOTED.
26	SUPPLY AND INSTALL CONTECH STORMFILTER, MODEL SFMH48, PER DETAIL 03 SHEET C7.03.
27	CONNECT (N) PVC PIPE TO RAINWATER LEADER DOWNSPOUT. REFER TO ARCHITECTURAL AND PLUMBING PLANS FOR PIPING CONTINUATION AT COLUMN.
28	INTERCEPT (E) UG ROOF DRAIN LEADER PIPING AND CONNECT TO (N) STORM DRAIN PIPE AT LOCATION NOTED.
29	SUPPLY AND INSTALL TRENCH DRAIN. SEE DETAIL 04 SHEET C7.01.

NOTES:

1. UTILITIES TO CROSS OVER OR UNDER OTHER UTILITIES TO MAINTAIN 12" MINIMUM CLEARANCE AT UTILITY CROSSINGS, UNLESS NOTED OTHERWISE.
2. CONTRACTOR SHALL VERIFY SIZE AND LOCATION (HORIZONTAL AND VERTICAL) OF EXISTING CROSSING AND JOINING UTILITIES PRIOR TO CONSTRUCTION AND IMMEDIATELY NOTIFY THE ENGINEER OF ANY CONFLICT.
3. CONTRACTOR SHALL CONSTRUCT GRAVITY UTILITIES (SEWER AND STORM DRAIN) BEFORE OTHER UTILITIES. CONSTRUCTION OF THESE GRAVITY UTILITIES TO START FROM THE DOWNSTREAM ENDS.
4. EXISTING UTILITIES ARE COMPILED BASED ON PREVIOUS BASE FILES, FIELD SURVEY AND FIELD VERIFICATION. POTHOLING IS RECOMMENDED TO VERIFY ANY AND ALL UTILITIES KNOWN OR UNKNOWN WHICH MAY BE IN CONFLICT WITH PROPOSED CONSTRUCTION.
5. PRIOR TO THE REMOVAL OF ANY WET OR DRY UTILITY LINES, THE CONTRACTOR SHALL CONFIRM WITH OWNER REPRESENTATIVE WHETHER THESE UTILITY LINES ARE STILL ACTIVE OR NOT. IMMEDIATELY NOTIFY THE ENGINEER OF ANY CONFLICT.
6. CONTRACTOR TO ADJUST TO FINISHED GRADE ALL EXISTING UTILITY BOXES, STORM DRAIN CLEANOUT COVERS, PULL BOXES AND VALVE COVERS NOT SPECIFICALLY SHOWN WITHIN THE LIMITS OF WORK.
7. SEE DETAIL 01 SHEET C7.01 FOR UTILITY TRENCHING AND BACKFILL.
8. ALL PRECAST DRAIN INLETS TO HAVE AN APPROVED "NO DUMPING DRAINS TO WETLAND" 3" X 5½" ROUNDED CORNERED RECTANGLES STYLE #NDO OR 4" DIAMETER ROUND STYLE #SDO ABRASION AND UV RESISTANT DURACAST STYLE MARKER BY DAS MANUFACTURING OR EQUIVALENT APPLIED TO THE CONCRETE COLLAR AROUND DRAIN INLET USING RAPID SET URETHANE ADHESIVE OR QUICKSTIK EPOXY PUTTY ADHESIVE PER MANUFACTURER'S RECOMMENDATIONS AND SPECIFICATIONS. http://www.dasmanufacturing.com/product_guide.html

IDENTIFICATION STAMP
DIV. OF THE STATE ARCHITECT
APP: 02-119490 INC:
REVIEWED FOR
SS ☑ FLS ☑ ACS ☑
DATE: 09/13/2022

LPA
ARCHITECTURE ENGINEERING INTERIORS
LANDSCAPE ARCHITECTURE PLANNING

916-287-2400 Office
916-287-2401 Fax
LPADesignStudios.com
431 I Street,
Suite 107
Sacramento, California 95814

REGISTERED PROFESSIONAL ENGINEER
KATHLEEN M. SHINKAI
R.C.E. 68369
EXP. 9-30-23
CIVIL
STATE OF CALIFORNIA

This document and all other project documents, ideas, aesthetics and designs incorporated therein are instruments of service. All project documents are copyright protected, are the property of LPA, Inc. (LPA) and cannot be lawfully used in whole or in part for any project or purpose except as set forth in the contractual agreement between LPA and its Client. The unauthorized disclosure and/or use of the project documents (including the creation of derivative works), may give rise to liability for copyright infringement, unlawful disclosure, use or misappropriation of property rights held by LPA. The unauthorized use of the project documents will give rise to the recovery of monetary losses and damages including attorney fees and costs for which the unauthorized user will be held liable.
Project documents describe the design intent of the work and are not a representation of as-built or existing conditions. LPA is not responsible for any discrepancies between the project documents and the existing conditions.

© LPA, Inc.

DAVIS HIGH SCHOOL
AQUATICS CENTER
315 WEST 14TH ST, DAVIS, CA 95616

Developed for
DAVIS JOINT UNIFIED SCHOOL DISTRICT

Revision	Date

Submittal	Date
50% DD REVIEW	06/15/2021
100% DESIGN DEVELOPMENT	07/26/2021
50% CD REVIEW	10/08/2021
100% CD DSA SUBMITTAL	10/22/2021
DSA SUBMITTAL	03/24/2022

Job Number	19044.13
Date Published	03/24/2022
Checked By	K. SHINKAI
Scale	1" = 10'

STORM DRAIN PLAN

C3.03

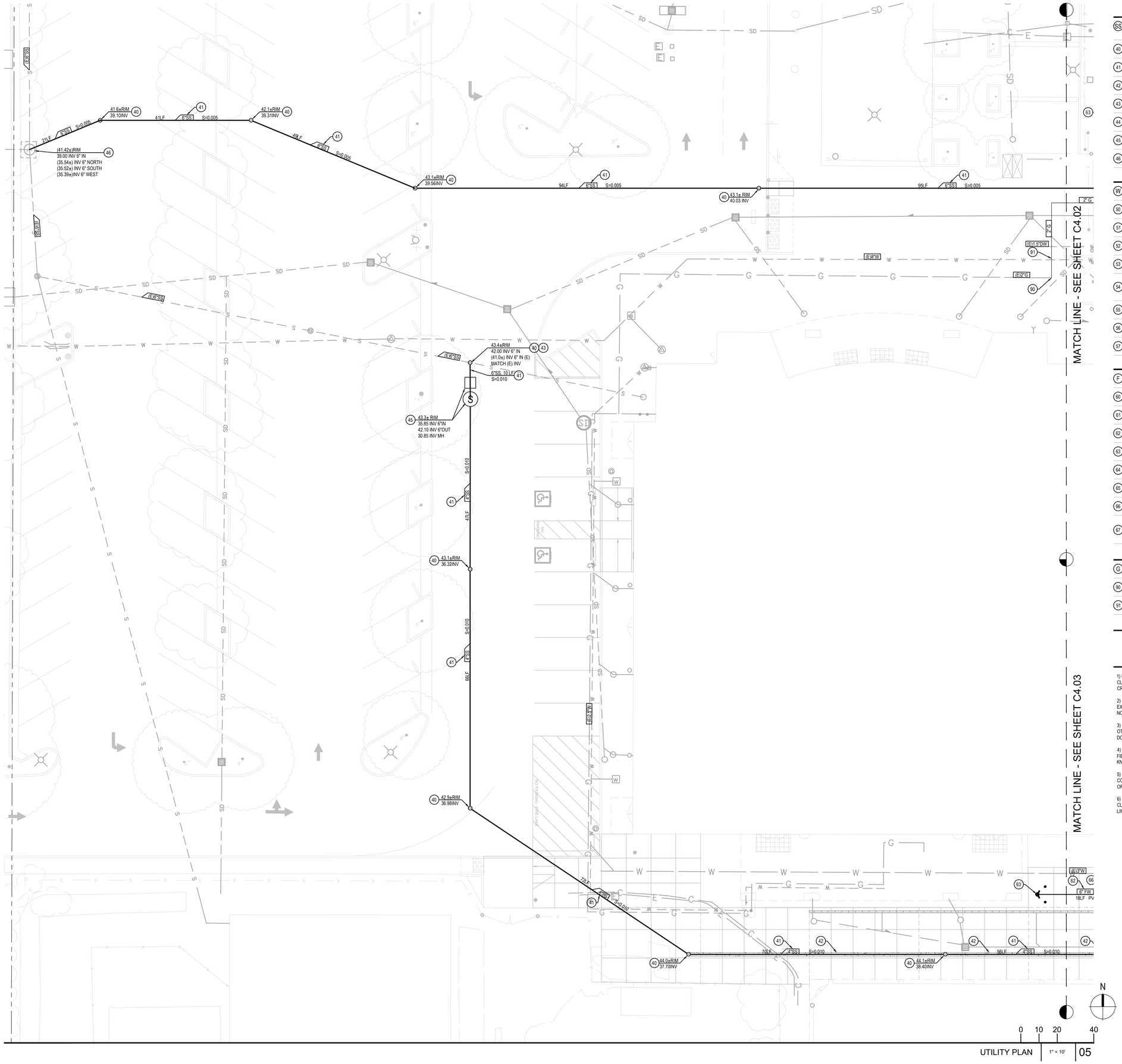

UTILITY PLAN 1" = 10' 05

SEWER CONSTRUCTION NOTES:

- SS — INSTALL SEWER SERVICE LATERAL TO 5' OUTSIDE FACE OF BUILDING (UNLESS OTHERWISE NOTED). SIZE AS SHOWN. SLOPE = 0.02 (MIN.) PLUG AND MARK END. VERIFY SEWER SERVICE CONNECTION WITH PLUMBING PLANS.
- 40 — INSTALL SEWER CLEANOUT PER DETAIL 10 SHEET C7.01.
- 41 — PLACE PVC SDR 35 (ASTM D 3034). SIZE AND SLOPE AS SHOWN.
- 42 — ENCASE SEWER IN SLURRY CONCRETE, MINIMUM 7" THICKNESS ON ALL SIDES, ALONG LENGTH OF PIPE SHOWN.
- 43 — ASSUMED LOCATION OF EXISTING SEWER LINE. VERIFY INVERT PRIOR TO CONSTRUCTION AND NOTIFY ENGINEER OF ANY DISCREPANCIES.
- 44 — CONSTRUCT STANDARD 36" SEWER MANHOLE PER DETAIL 13 SHEET C7.01.
- 45 — CONSTRUCT STANDARD 60" SEWER MANHOLE WITH LIFT STATION AND EXTERNAL VALVE BOX PER DETAIL 01 SHEET C7.03.
- 46 — CONNECT (N) SEWER LINE TO (E) MANHOLE AT LOCATION NOTED. FIELD-VERIFY ALL ELEVATIONS PRIOR TO CONSTRUCTION.

WATER CONSTRUCTION NOTES:

- W — INSTALL WATER SERVICE LATERAL TO 5' OUTSIDE FACE-OF-BUILDING. SIZE AS SHOWN. PLUG AND MARK END. VERIFY WATER CONNECTION WITH PLUMBING PLANS.
- 50 — INSTALL THRUST BLOCKING PER DETAIL 02 SHEET C7.01. TYPICAL FOR ALL BENDS, TEES AND CROSSES ON PIPE SIZES GREATER THAN 4".
- 51 — PLACE PVC C900 DR-18 WITH 30" MIN. COVER AND 36" MIN COVER WHERE VEHICULAR SURFACE LOADS ARE EXPECTED.
- 52 — INSTALL DRINKING FOUNTAIN WITH 2" PVC SCH 40 DOMESTIC WATER LATERAL. INCLUDE SHUT-OFF VALVE. REFER TO LANDSCAPING PLANS FOR DETAILS.
- 53 — SUPPLY AND INSTALL GATE VALVE PER DETAIL 11 SHEET C7.01.
- 54 — CONNECT TO EXISTING DOMESTIC WATER SERVICE LINE WITH FLANGED COUPLING ADAPTER USING STAINLESS STEEL NUTS, BOLTS, AND WASHERS. CONTRACTOR TO VERIFY SIZE AND LOCATION OF EXISTING WATER LINE AND NOTIFY ENGINEER OF ANY DISCREPANCIES PRIOR TO CONSTRUCTION.
- 55 — TEMPERED WATER SYSTEM FOR POOL DECK SHOWERS, SHOWN FOR REFERENCE ONLY. REFER TO PLUMBING PLANS FOR DETAILS.
- 56 — FIELD-VERIFY WATER CONNECTION (INCLUDING SIZE, LOCATION, AND SERVICE) AT PORTABLES AND RECONNECT TO (E) WATER LINES AT OR BENEATH PORTABLES.
- 57 — INSTALL DRINKING FOUNTAIN WITH WATER AND SEWER SERVICE PROVIDED FROM (N) BUILDING. REFER TO LANDSCAPING PLANS FOR DETAILS AND PLUMBING PLANS FOR PIPING CONNECTIONS.

FIRE WATER CONSTRUCTION NOTES:

- F — INSTALL FIRE WATER SERVICE LATERAL, SIZE AS SHOWN. PLUG AND MARK END. VERIFY WATER CONNECTION WITH PLUMBING PLANS.
- 60 — INSTALL THRUST BLOCKING PER DETAIL 02 SHEET C7.01. TYPICAL FOR ALL BENDS, TEES AND CROSSES.
- 61 — PLACE PVC C900 DR-14 WITH 30" MIN. COVER AND 36" MIN. COVER WHERE VEHICULAR SURFACE LOADS ARE EXPECTED.
- 62 — PLACE PVC C900 DR-18 WITH 30" MIN. COVER AND 36" MIN. COVER WHERE VEHICULAR SURFACE LOADS ARE EXPECTED.
- 63 — INSTALL FIRE HYDRANT PER DETAIL 17 SHEET C7.01. INSTALL 6" DIAMETER STEEL POST CONCRETE-FILLED BOLLARDS AT LOCATIONS SHOWN, 36" CLEAR FROM HYDRANT.
- 64 — INSTALL FDC, PIV (WITH TAMPER SWITCH) AND CHECK VALVE PER DETAIL 09 SHEET C7.01. LATERAL SHALL BE PVC C900 DR-14.
- 65 — COORDINATE LOCATION OF ELECTRICAL SERVICE FOR THE ELECTRICAL SUPERVISORY SWITCH TO THE FIRE ALARM CONTROL PANEL WITH ELECTRICAL PLANS.
- 66 — SUPPLY AND INSTALL GATE VALVE PER DETAIL 11 SHEET C7.01.
- 67 — CONNECT TO EXISTING WATER LINE WITH FLANGED COUPLING ADAPTER USING STAINLESS STEEL NUTS, BOLTS, AND WASHERS. CONTRACTOR TO VERIFY SIZE AND LOCATION OF EXISTING WATER LINE AND NOTIFY ENGINEER OF ANY DISCREPANCIES PRIOR TO CONSTRUCTION.

GAS CONSTRUCTION NOTES:

- G — INSTALL GAS SERVICE. SEE PLUMBING PLANS FOR SIZE AND DETAILS.
- 90 — ASSUMED LOCATION OF EXISTING GAS LINE. VERIFY SIZE AND LOCATION PRIOR TO CONSTRUCTION AND NOTIFY ENGINEER OF ANY DISCREPANCIES.
- 91 — NEW 2" MP GAS (REALIGNMENT) SHOWN FOR REFERENCE. SEE PLUMBING PLANS FOR DETAILS.

ELECTRICAL COORDINATION:

(N) ELECTRICAL CONDUITS AND LIGHTING SHOWN FOR REFERENCE ONLY. REFER TO ELECTRICAL PLANS FOR DETAILS.

CONSTRUCTION NOTES:

1) UTILITIES TO CROSS OVER OR UNDER OTHER UTILITIES TO MAINTAIN 12" MINIMUM CLEARANCE AT UTILITY CROSSINGS, UNLESS NOTED OTHERWISE. SANITARY SEWER TO CROSS UNDER POTABLE WATER.

2) CONTRACTOR SHALL VERIFY SIZE AND LOCATION (HORIZONTAL AND VERTICAL) OF EXISTING CROSSING AND JOINING UTILITIES PRIOR TO CONSTRUCTION AND IMMEDIATELY NOTIFY THE ENGINEER OF ANY CONFLICT.

3) CONTRACTOR SHALL CONSTRUCT GRAVITY UTILITIES (SEWER AND STORM DRAIN) BEFORE OTHER UTILITIES. CONSTRUCTION OF THESE GRAVITY UTILITIES TO START FROM THE DOWNSTREAM ENDS.

4) EXISTING UTILITIES ARE COMPILED BASED ON PREVIOUS BASE FILES, FIELD SURVEY AND FIELD VERIFICATION. POTHOLING IS RECOMMENDED TO VERIFY ANY AND ALL UTILITIES KNOWN OR UNKNOWN WHICH MAY BE IN CONFLICT WITH PROPOSED CONSTRUCTION.

5) PRIOR TO THE REMOVAL OF ANY WET OR DRY UTILITY LINES, THE CONTRACTOR SHALL CONFIRM WITH OWNER REPRESENTATIVE WHETHER THESE UTILITY LINES ARE STILL ACTIVE OR NOT. IMMEDIATELY NOTIFY THE ENGINEER OF ANY CONFLICT.

6) CONTRACTOR TO ADJUST TO FINISHED GRADE ALL EXISTING UTILITY BOXES, SEWER CLEANOUT COVERS, PULL BOXES AND VALVE COVERS NOT SPECIFICALLY SHOWN WITHIN THE LIMITS OF WORK.

IDENTIFICATION STAMP
DIV. OF THE STATE ARCHITECT
APP: 02-119490 INC:
REVIEWED FOR
SS ☑ FLS ☑ ACS ☑
DATE: 09/13/2022

LPA
ARCHITECTURE ENGINEERING INTERIORS
LANDSCAPE ARCHITECTURE PLANNING

916-287-2400 Office
916-287-2401 Fax
LPADesignStudios.com
431 I Street,
Suite 107
Sacramento, California 95814

REGISTERED PROFESSIONAL ENGINEER
KATHLEEN M. HARTRAT
R.C.E. 68369
EXP. 9-30-23
CIVIL
STATE OF CALIFORNIA

This document and all other project documents, ideas, aesthetics and designs incorporated therein are instruments of service. All project documents are copyright protected, are the property of LPA, Inc. (LPA) and cannot be lawfully used in whole or in part for any project or purpose except as set forth in the contractual agreement between LPA and its Client. The unauthorized disclosure and/or use of the project documents (including the creation of derivative works), may give rise to liability for copyright infringement, unlawful disclosure, use or misappropriation of property rights held by LPA. The unauthorized use of the project documents will give rise to the recovery of monetary losses and damages including attorney fees and costs for which the unauthorized user will be held liable.
Project documents describe the design intent of the work and are not a representation of as-built or existing conditions. LPA is not responsible for any discrepancies between the project documents and the existing conditions.

© LPA, Inc.

DAVIS HIGH SCHOOL
AQUATICS CENTER
315 WEST 14TH ST, DAVIS, CA 95616

Developed for
DAVIS JOINT UNIFIED SCHOOL DISTRICT

Revision	Date

Submittal	Date
50% DD REVIEW	06/15/2021
100% DESIGN DEVELOPMENT	07/26/2021
50% CD REVIEW	10/08/2021
100% CD DSA SUBMITTAL	10/22/2021
DSA SUBMITTAL	03/24/2022

Job Number	19044.13
Date Published	03/24/2022
Checked By	K. SHINKAI
Scale	1" = 10'

UTILITY PLAN

C4.01

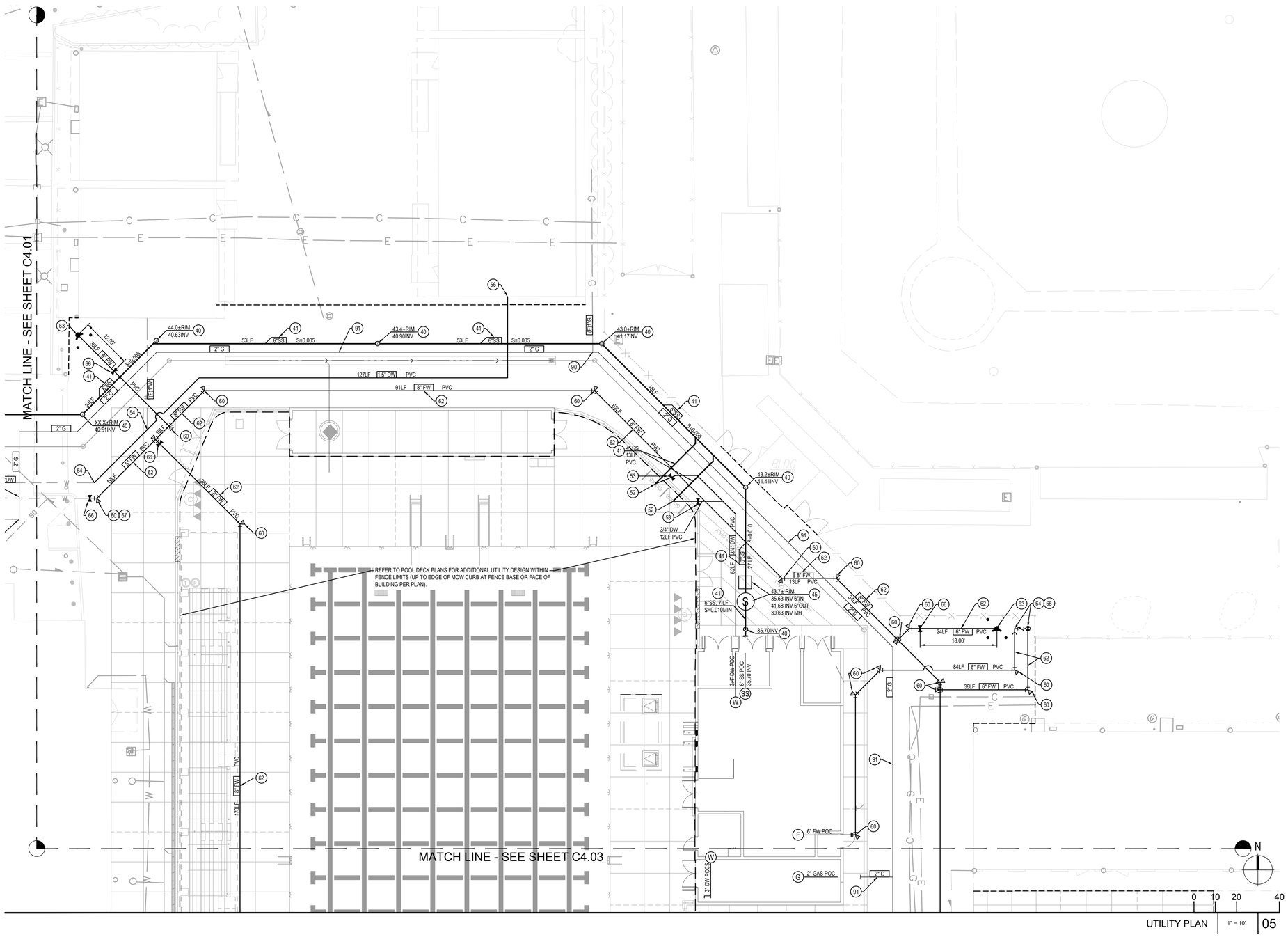

SEWER CONSTRUCTION NOTES:

- (SS) INSTALL SEWER SERVICE LATERAL TO 5' OUTSIDE FACE OF BUILDING (UNLESS OTHERWISE NOTED). SIZE AS SHOWN. SLOPE = 0.02 (MIN.) PLUG AND MARK END. VERIFY SEWER SERVICE CONNECTION WITH PLUMBING PLANS.
- (40) INSTALL SEWER CLEANOUT PER DETAIL 10 SHEET C7.01.
- (41) PLACE PVC SDR 35 (ASTM D 3034). SIZE AND SLOPE AS SHOWN.
- (42) ENCASE SEWER IN SLURRY CONCRETE, MINIMUM 7" THICKNESS ON ALL SIDES, ALONG LENGTH OF PIPE SHOWN.
- (43) ASSUMED LOCATION OF EXISTING SEWER LINE. VERIFY INVERT PRIOR TO CONSTRUCTION AND NOTIFY ENGINEER OF ANY DISCREPANCIES.
- (44) CONSTRUCT STANDARD 36" SEWER MANHOLE PER DETAIL 13 SHEET C7.01.
- (45) CONSTRUCT STANDARD 60" SEWER MANHOLE WITH LIFT STATION AND EXTERNAL VALVE BOX PER DETAIL 01 SHEET C7.03.
- (46) CONNECT (N) SEWER LINE TO (E) MANHOLE AT LOCATION NOTED. FIELD-VERIFY ALL ELEVATIONS PRIOR TO CONSTRUCTION.

WATER CONSTRUCTION NOTES:

- (W) INSTALL WATER SERVICE LATERAL TO 5' OUTSIDE FACE-OF-BUILDING. SIZE AS SHOWN. PLUG AND MARK END. VERIFY WATER CONNECTION WITH PLUMBING PLANS.
- (50) INSTALL THRUST BLOCKING PER DETAIL 02 SHEET C7.01. TYPICAL FOR ALL BENDS, TEES AND CROSSES ON PIPE SIZES GREATER THAN 4".
- (51) PLACE PVC C900 DR-18 WITH 30" MIN. COVER AND 36" MIN COVER WHERE VEHICULAR SURFACE LOADS ARE EXPECTED.
- (52) INSTALL DRINKING FOUNTAIN WITH 2" PVC SCH 40 DOMESTIC WATER LATERAL. INCLUDE SHUT-OFF VALVE. REFER TO LANDSCAPING PLANS FOR DETAILS.
- (53) SUPPLY AND INSTALL GATE VALVE PER DETAIL 11 SHEET C7.01.
- (54) CONNECT TO EXISTING DOMESTIC WATER SERVICE LINE WITH FLANGED COUPLING ADAPTER USING STAINLESS STEEL NUTS, BOLTS, AND WASHERS. CONTRACTOR TO VERIFY SIZE AND LOCATION OF EXISTING WATER LINE AND NOTIFY ENGINEER OF ANY DISCREPANCIES PRIOR TO CONSTRUCTION.
- (55) TEMPERED WATER SYSTEM FOR POOL DECK SHOWERS, SHOWN FOR REFERENCE ONLY. REFER TO PLUMBING PLANS FOR DETAILS.
- (56) FIELD-VERIFY WATER CONNECTION (INCLUDING SIZE, LOCATION, AND SERVICE) AT PORTABLES AND RECONNECT TO (E) WATER LINES AT OR BENEATH PORTABLES.
- (57) INSTALL DRINKING FOUNTAIN WITH WATER AND SEWER SERVICE PROVIDED FROM (N) BUILDING. REFER TO LANDSCAPING PLANS FOR DETAILS AND PLUMBING PLANS FOR PIPING CONNECTIONS.

FIRE WATER CONSTRUCTION NOTES:

- (F) INSTALL FIRE WATER SERVICE LATERAL. SIZE AS SHOWN. PLUG AND MARK END. VERIFY WATER CONNECTION WITH PLUMBING PLANS.
- (60) INSTALL THRUST BLOCKING PER DETAIL 02 SHEET C7.01. TYPICAL FOR ALL BENDS, TEES AND CROSSES.
- (61) PLACE PVC C900 DR-14 WITH 30" MIN. COVER AND 36" MIN. COVER WHERE VEHICULAR SURFACE LOADS ARE EXPECTED.
- (62) PLACE PVC C900 DR-18 WITH 30" MIN. COVER AND 36" MIN. COVER WHERE VEHICULAR SURFACE LOADS ARE EXPECTED.
- (63) INSTALL FIRE HYDRANT PER DETAIL 17 SHEET C7.01. INSTALL 6" DIAMETER STEEL POST CONCRETE-FILLED BOLLARDS AT LOCATIONS SHOWN, 36" CLEAR FROM HYDRANT.
- (64) INSTALL FDC, PIV (WITH TAMPER SWITCH) AND CHECK VALVE PER DETAIL 09 SHEET C7.01. LATERAL SHALL BE PVC C900 DR-14.
- (65) COORDINATE LOCATION OF ELECTRICAL SERVICE FOR THE ELECTRICAL SUPERVISORY SWITCH TO THE FIRE ALARM CONTROL PANEL WITH ELECTRICAL PLANS.
- (66) SUPPLY AND INSTALL GATE VALVE PER DETAIL 11 SHEET C7.01.
- (67) CONNECT TO EXISTING WATER LINE WITH FLANGED COUPLING ADAPTER USING STAINLESS STEEL NUTS, BOLTS, AND WASHERS. CONTRACTOR TO VERIFY SIZE AND LOCATION OF EXISTING WATER LINE AND NOTIFY ENGINEER OF ANY DISCREPANCIES PRIOR TO CONSTRUCTION.

GAS CONSTRUCTION NOTES:

- (G) INSTALL GAS SERVICE. SEE PLUMBING PLANS FOR SIZE AND DETAILS.
- (90) ASSUMED LOCATION OF EXISTING GAS LINE. VERIFY SIZE AND LOCATION PRIOR TO CONSTRUCTION AND NOTIFY ENGINEER OF ANY DISCREPANCIES.
- (91) NEW 2" MP GAS (REALIGNMENT) SHOWN FOR REFERENCE. SEE PLUMBING PLANS FOR DETAILS.

ELECTRICAL COORDINATION:

(N) ELECTRICAL CONDUITS AND LIGHTING SHOWN FOR REFERENCE ONLY. REFER TO ELECTRICAL PLANS FOR DETAILS.

CONSTRUCTION NOTES:

1) UTILITIES TO CROSS OVER OR UNDER OTHER UTILITIES TO MAINTAIN 12" MINIMUM CLEARANCE AT UTILITY CROSSINGS, UNLESS NOTED OTHERWISE. SANITARY SEWER TO CROSS UNDER POTABLE WATER.

2) CONTRACTOR SHALL VERIFY SIZE AND LOCATION (HORIZONTAL AND VERTICAL) OF EXISTING CROSSING AND JOINING UTILITIES PRIOR TO CONSTRUCTION AND IMMEDIATELY NOTIFY THE ENGINEER OF ANY CONFLICT.

3) CONTRACTOR SHALL CONSTRUCT GRAVITY UTILITIES (SEWER AND STORM DRAIN) BEFORE OTHER UTILITIES. CONSTRUCTION OF THESE GRAVITY UTILITIES TO START FROM THE DOWNSTREAM ENDS.

4) EXISTING UTILITIES ARE COMPILED BASED ON PREVIOUS BASE FILES, FIELD SURVEY AND FIELD VERIFICATION. POTHOLING IS RECOMMENDED TO VERIFY ANY AND ALL UTILITIES KNOWN OR UNKNOWN WHICH MAY BE IN CONFLICT WITH PROPOSED CONSTRUCTION.

5) PRIOR TO THE REMOVAL OF ANY WET OR DRY UTILITY LINES, THE CONTRACTOR SHALL CONFIRM WITH OWNER REPRESENTATIVE WHETHER THESE UTILITY LINES ARE STILL ACTIVE OR NOT. IMMEDIATELY NOTIFY THE ENGINEER OF ANY CONFLICT.

6) CONTRACTOR TO ADJUST TO FINISHED GRADE ALL EXISTING UTILITY BOXES, SEWER CLEANOUT COVERS, PULL BOXES AND VALVE COVERS NOT SPECIFICALLY SHOWN WITHIN THE LIMITS OF WORK.

IDENTIFICATION STAMP
DIV. OF THE STATE ARCHITECT
APP: 02-119490 INC:
REVIEWED FOR
SS ☑ FLS ☑ ACS ☑
DATE: 09/13/2022

LPA
ARCHITECTURE ENGINEERING INTERIORS
LANDSCAPE ARCHITECTURE PLANNING

916-287-2400 Office
916-287-2401 Fax
LPADesignStudios.com
431 I Street,
Suite 107
Sacramento, California 95814

REGISTERED PROFESSIONAL ENGINEER
KATHLEEN M. SHINKAI
R.C.E. 68369
EXP. 9-30-23
CIVIL
STATE OF CALIFORNIA

This document and all other project documents, ideas, aesthetics and designs incorporated therein are instruments of service. All project documents are copyright protected, are the property of LPA, Inc. (LPA) and cannot be lawfully used in whole or in part for any project or purpose except as set forth in the contractual agreement between LPA and its Client. The unauthorized disclosure and/or use of the project documents (including the creation of derivative works), may give rise to liability for copyright infringement, unlawful disclosure, use or misappropriation of property rights held by LPA. The unauthorized use of the project documents will give rise to the recovery of monetary losses and damages including attorney fees and costs for which the unauthorized user will be held liable.
Project documents describe the design intent of the work and are not a representation of as-built or existing conditions. LPA is not responsible for any discrepancies between the project documents and the existing conditions.

© LPA, Inc.

DAVIS HIGH SCHOOL
AQUATICS CENTER
315 WEST 14TH ST, DAVIS, CA 95616

Developed for
DAVIS JOINT UNIFIED SCHOOL DISTRICT

Revision	Date

Submittal	Date
50% DD REVIEW	06/15/2021
100% DESIGN DEVELOPMENT	07/26/2021
50% CD REVIEW	10/08/2021
100% CD DSA SUBMITTAL	10/22/2021
DSA SUBMITTAL	03/24/2022

Job Number	19044.13
Date Published	03/24/2022
Checked By	K. SHINKAI
Scale	1" = 10'

UTILITY PLAN

C4.02

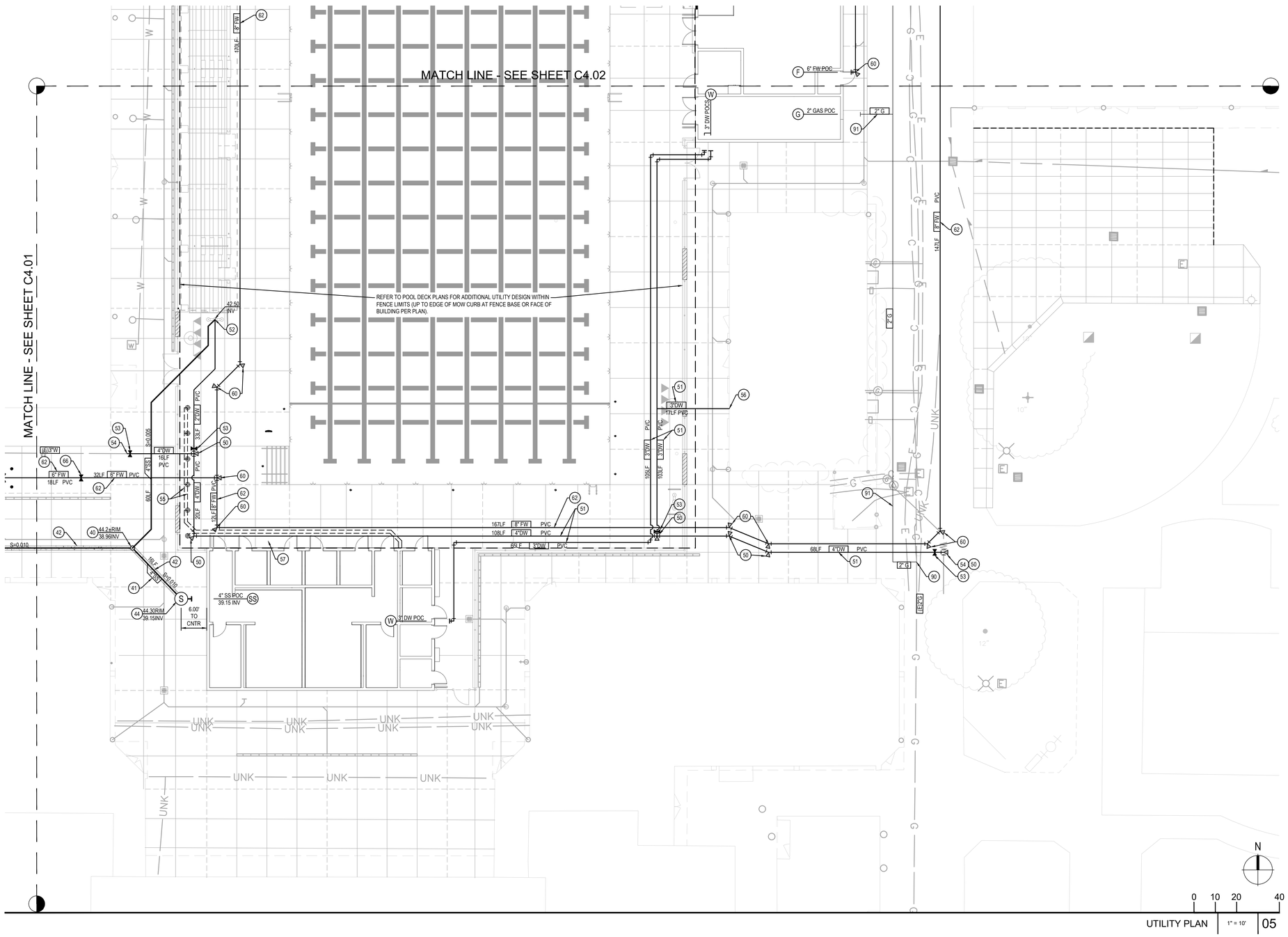

SEWER CONSTRUCTION NOTES:

- (SS) INSTALL SEWER SERVICE LATERAL TO 5' OUTSIDE FACE OF BUILDING (UNLESS OTHERWISE NOTED). SIZE AS SHOWN. SLOPE = 0.02 (MIN.) PLUG AND MARK END. VERIFY SEWER SERVICE CONNECTION WITH PLUMBING PLANS.
- (40) INSTALL SEWER CLEANOUT PER DETAIL 10 SHEET C7.01.
- (41) PLACE PVC SDR 35 (ASTM D 3034). SIZE AND SLOPE AS SHOWN.
- (42) ENCASE SEWER IN SLURRY CONCRETE, MINIMUM 7" THICKNESS ON ALL SIDES, ALONG LENGTH OF PIPE SHOWN.
- (43) ASSUMED LOCATION OF EXISTING SEWER LINE. VERIFY INVERT PRIOR TO CONSTRUCTION AND NOTIFY ENGINEER OF ANY DISCREPANCIES.
- (44) CONSTRUCT STANDARD 36" SEWER MANHOLE PER DETAIL 13 SHEET C7.01.
- (45) CONSTRUCT STANDARD 60" SEWER MANHOLE WITH LIFT STATION AND EXTERNAL VALVE BOX PER DETAIL 01 SHEET C7.03.
- (46) CONNECT (N) SEWER LINE TO (E) MANHOLE AT LOCATION NOTED. FIELD-VERIFY ALL ELEVATIONS PRIOR TO CONSTRUCTION.

WATER CONSTRUCTION NOTES:

- (W) INSTALL WATER SERVICE LATERAL TO 5' OUTSIDE FACE-OF-BUILDING. SIZE AS SHOWN. PLUG AND MARK END. VERIFY WATER CONNECTION WITH PLUMBING PLANS.
- (50) INSTALL THRUST BLOCKING PER DETAIL 02 SHEET C7.01. TYPICAL FOR ALL BENDS, TEES AND CROSSES ON PIPE SIZES GREATER THAN 4".
- (51) PLACE PVC C900 DR-18 WITH 30" MIN. COVER AND 36" MIN COVER WHERE VEHICULAR SURFACE LOADS ARE EXPECTED.
- (52) INSTALL DRINKING FOUNTAIN WITH 2" PVC SCH 40 DOMESTIC WATER LATERAL. INCLUDE SHUT-OFF VALVE. REFER TO LANDSCAPING PLANS FOR DETAILS.
- (53) SUPPLY AND INSTALL GATE VALVE PER DETAIL 11 SHEET C7.01.
- (54) CONNECT TO EXISTING DOMESTIC WATER SERVICE LINE WITH FLANGED COUPLING ADAPTER USING STAINLESS STEEL NUTS, BOLTS, AND WASHERS. CONTRACTOR TO VERIFY SIZE AND LOCATION OF EXISTING WATER LINE AND NOTIFY ENGINEER OF ANY DISCREPANCIES PRIOR TO CONSTRUCTION.
- (55) TEMPERED WATER SYSTEM FOR POOL DECK SHOWERS, SHOWN FOR REFERENCE ONLY. REFER TO PLUMBING PLANS FOR DETAILS.
- (56) FIELD-VERIFY WATER CONNECTION (INCLUDING SIZE, LOCATION, AND SERVICE) AT PORTABLES AND RECONNECT TO (E) WATER LINES AT OR BENEATH PORTABLES.
- (57) INSTALL DRINKING FOUNTAIN WITH WATER AND SEWER SERVICE PROVIDED FROM (N) BUILDING. REFER TO LANDSCAPING PLANS FOR DETAILS AND PLUMBING PLANS FOR PIPING CONNECTIONS.

FIRE WATER CONSTRUCTION NOTES:

- (F) INSTALL FIRE WATER SERVICE LATERAL. SIZE AS SHOWN. PLUG AND MARK END. VERIFY WATER CONNECTION WITH PLUMBING PLANS.
- (60) INSTALL THRUST BLOCKING PER DETAIL 02 SHEET C7.01. TYPICAL FOR ALL BENDS, TEES AND CROSSES.
- (61) PLACE PVC C900 DR-14 WITH 30" MIN. COVER AND 36" MIN. COVER WHERE VEHICULAR SURFACE LOADS ARE EXPECTED.
- (62) PLACE PVC C900 DR-18 WITH 30" MIN. COVER AND 36" MIN. COVER WHERE VEHICULAR SURFACE LOADS ARE EXPECTED.
- (63) INSTALL FIRE HYDRANT PER DETAIL 17 SHEET C7.01. INSTALL 6" DIAMETER STEEL POST CONCRETE-FILLED BOLLARDS AT LOCATIONS SHOWN, 36" CLEAR FROM HYDRANT.
- (64) INSTALL FDC, PIV (WITH TAMPER SWITCH) AND CHECK VALVE PER DETAIL 09 SHEET C7.01. LATERAL SHALL BE PVC C900 DR-14.
- (65) COORDINATE LOCATION OF ELECTRICAL SERVICE FOR THE ELECTRICAL SUPERVISORY SWITCH TO THE FIRE ALARM CONTROL PANEL WITH ELECTRICAL PLANS.
- (66) SUPPLY AND INSTALL GATE VALVE PER DETAIL 11 SHEET C7.01.
- (67) CONNECT TO EXISTING WATER LINE WITH FLANGED COUPLING ADAPTER USING STAINLESS STEEL NUTS, BOLTS, AND WASHERS. CONTRACTOR TO VERIFY SIZE AND LOCATION OF EXISTING WATER LINE AND NOTIFY ENGINEER OF ANY DISCREPANCIES PRIOR TO CONSTRUCTION.

GAS CONSTRUCTION NOTES:

- (G) INSTALL GAS SERVICE. SEE PLUMBING PLANS FOR SIZE AND DETAILS.
- (90) ASSUMED LOCATION OF EXISTING GAS LINE. VERIFY SIZE AND LOCATION PRIOR TO CONSTRUCTION AND NOTIFY ENGINEER OF ANY DISCREPANCIES.
- (91) NEW 2" MP GAS (REALIGNMENT) SHOWN FOR REFERENCE. SEE PLUMBING PLANS FOR DETAILS.

ELECTRICAL COORDINATION:

(N) ELECTRICAL CONDUITS AND LIGHTING SHOWN FOR REFERENCE ONLY. REFER TO ELECTRICAL PLANS FOR DETAILS.

CONSTRUCTION NOTES:

1) UTILITIES TO CROSS OVER OR UNDER OTHER UTILITIES TO MAINTAIN 12" MINIMUM CLEARANCE AT UTILITY CROSSINGS, UNLESS NOTED OTHERWISE. SANITARY SEWER TO CROSS UNDER POTABLE WATER.

2) CONTRACTOR SHALL VERIFY SIZE AND LOCATION (HORIZONTAL AND VERTICAL) OF EXISTING CROSSING AND JOINING UTILITIES PRIOR TO CONSTRUCTION AND IMMEDIATELY NOTIFY THE ENGINEER OF ANY CONFLICT.

3) CONTRACTOR SHALL CONSTRUCT GRAVITY UTILITIES (SEWER AND STORM DRAIN) BEFORE OTHER UTILITIES. CONSTRUCTION OF THESE GRAVITY UTILITIES TO START FROM THE DOWNSTREAM ENDS.

4) EXISTING UTILITIES ARE COMPILED BASED ON PREVIOUS BASE FILES, FIELD SURVEY AND FIELD VERIFICATION. POTHOLING IS RECOMMENDED TO VERIFY ANY AND ALL UTILITIES KNOWN OR UNKNOWN WHICH MAY BE IN CONFLICT WITH PROPOSED CONSTRUCTION.

5) PRIOR TO THE REMOVAL OF ANY WET OR DRY UTILITY LINES, THE CONTRACTOR SHALL CONFIRM WITH OWNER REPRESENTATIVE WHETHER THESE UTILITY LINES ARE STILL ACTIVE OR NOT. IMMEDIATELY NOTIFY THE ENGINEER OF ANY CONFLICT.

6) CONTRACTOR TO ADJUST TO FINISHED GRADE ALL EXISTING UTILITY BOXES, SEWER CLEANOUT COVERS, PULL BOXES AND VALVE COVERS NOT SPECIFICALLY SHOWN WITHIN THE LIMITS OF WORK.

IDENTIFICATION STAMP
DIV. OF THE STATE ARCHITECT
APP: 02-119490 INC:
REVIEWED FOR
SS ☑ FLS ☑ ACS ☑
DATE: 09/13/2022

LPA
ARCHITECTURE ENGINEERING INTERIORS
LANDSCAPE ARCHITECTURE PLANNING

916-287-2400 Office
916-287-2401 Fax
LPADesignStudios.com
431 I Street,
Suite 107
Sacramento, California 95814

REGISTERED PROFESSIONAL ENGINEER
KATHLEEN M. SHINKAI
R.C.E. 68369
EXP. 9-30-23
CIVIL
STATE OF CALIFORNIA

This document and all other project documents, ideas, aesthetics and designs incorporated therein are instruments of service. All project documents are copyright protected, are the property of LPA, Inc. (LPA) and cannot be lawfully used in whole or in part for any project or purpose except as set forth in the contractual agreement between LPA and its Client. The unauthorized disclosure and/or use of the project documents (including the creation of derivative works), may give rise to liability for copyright infringement, unlawful disclosure, use or misappropriation of property rights held by LPA. The unauthorized use of the project documents will give rise to the recovery of monetary losses and damages including attorney fees and costs for which the unauthorized user will be held liable.
Project documents describe the design intent of the work and are not a representation of as-built or existing conditions. LPA is not responsible for any discrepancies between the project documents and the existing conditions.

© LPA, Inc.

DAVIS HIGH SCHOOL
AQUATICS CENTER
315 WEST 14TH ST, DAVIS, CA 95616

Developed for
DAVIS JOINT UNIFIED SCHOOL DISTRICT

Revision	Date

Submittal	Date
50% DD REVIEW	06/15/2021
100% DESIGN DEVELOPMENT	07/26/2021
50% CD REVIEW	10/08/2021
100% CD DSA SUBMITTAL	10/22/2021
DSA SUBMITTAL	03/24/2022

Job Number	19044.13
Date Published	03/24/2022
Checked By	K. SHINKAI
Scale	1" = 10'

UTILITY PLAN

C4.03

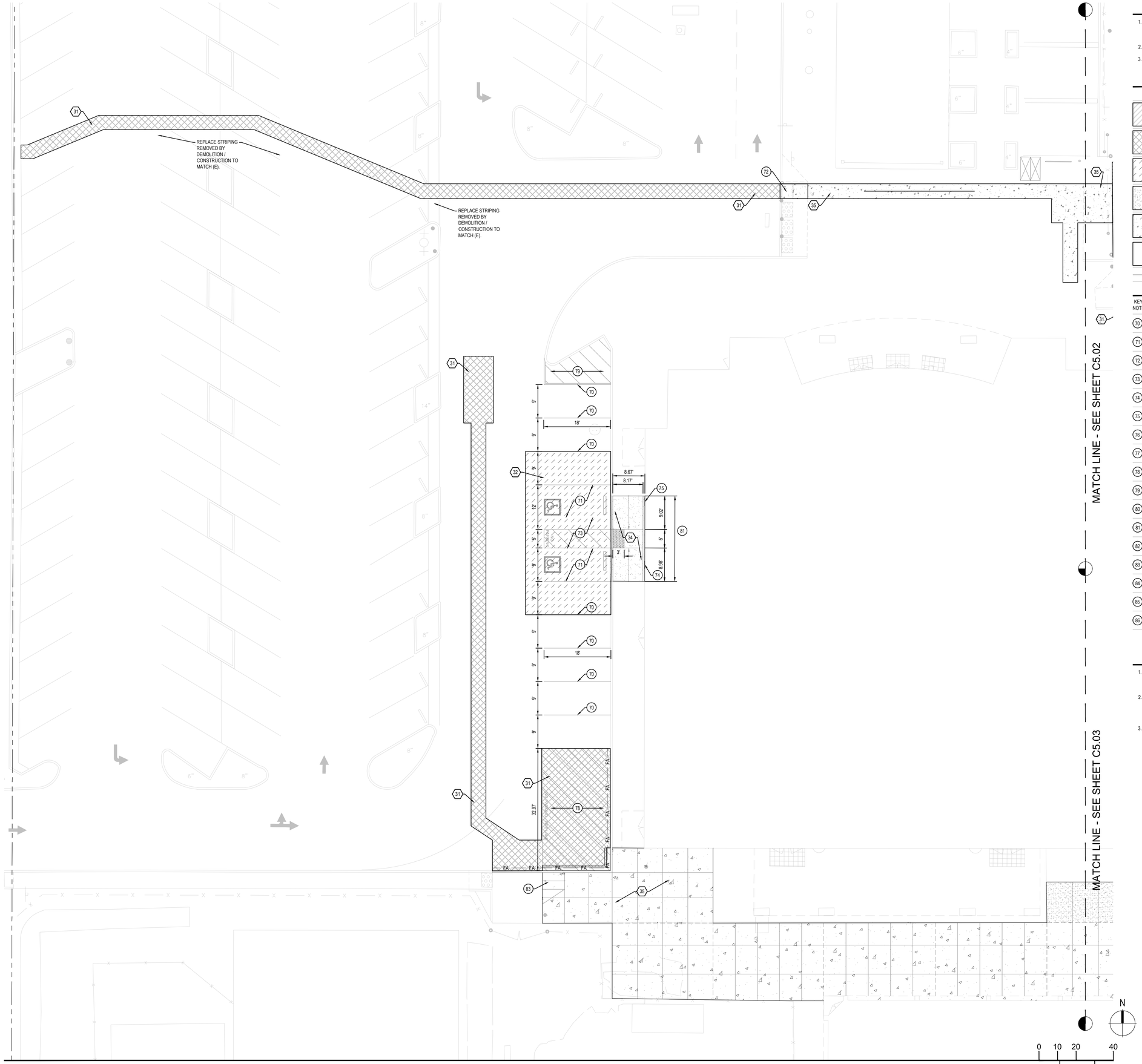

HORIZONTAL CONTROL, PAVING, STRIPING, AND SIGNAGE PLAN | 1" = 10' | 05

0 10 20 40

PAVING NOTES:

1. SEE LANDSCAPE PLANS FOR PAVERS, LOCATION AND TYPE OF CONCRETE WALKS AND HARDSCAPE INCLUDING DETAILS FOR CONCRETE FINISHES, CONTROL JOINTS AND EXPANSION JOINTS.
2. VERIFY ALL VEHICULAR AND NON-VEHICULAR LIMITS WITH LANDSCAPE PLANS.
3. ALL EXTERIOR CONCRETE FLATWORK TO BE CONSTRUCTED ON A MINIMUM OF 12 INCHES OF NON-EXPANSIVE COMPACTABLE SOIL. REFER TO THE GEOTECHNICAL REPORT FOR ADDITIONAL DETAILS AND REQUIREMENTS.

PAVING LEGEND

SYMBOL	DESCRIPTION
30	PARKING STALL AC PAVEMENT 3" AC OVER 10" AB PER GEOTECHNICAL ENGINEER'S RECOMMENDATION.
31	HEAVY DUTY AC PAVEMENT 3" AC OVER 16" AB PER GEOTECHNICAL ENGINEER'S RECOMMENDATION.
32	AC PAVEMENT OVERLAY INSTALL ASPHALT PAVEMENT, MINIMUM 4" THICKNESS, OVER BASE TO REMAIN.
34	PEDESTRIAN CONCRETE PAVEMENT 6" PCC OVER 4" AB MINIMUM, OR AS PER GEOTECHNICAL ENGINEER'S RECOMMENDATION. SEE LANDSCAPING PLANS FOR DETAILS.
35	VEHICULAR CONCRETE PAVEMENT 6" PCC OVER 6" AB MINIMUM, OR AS PER GEOTECHNICAL ENGINEER'S RECOMMENDATION. SEE LANDSCAPING PLANS FOR DETAILS.
PA	PLANTING AREA SEE LANDSCAPE PLANS.
FA	FIRE ACCESS: PAINT CURB RED PER DETAIL 11, SHEET C7.02. COORDINATE WITH APPROVED FIRE ACCESS PLAN.

CONSTRUCTION NOTES:

KEY NOTE	DESCRIPTION
70	PAINT PARKING STALL STRIPING: 4" WIDE STRIPE, WHITE, THERMOPLASTIC.
71	PAINT AND FURNISH ANGULAR ACCESSIBLE PARKING STALL PER DETAIL 01 SHEET C7.02.
72	PAINT AND FURNISH PERPENDICULAR ACCESSIBLE PARKING STALL PER DETAIL 02 SHEET C7.02.
73	PAINT ACCESSIBLE LOADING AISLE PER DETAIL 01 SHEET C7.02. PAINT WORDS "NO PARKING" IN 12" HIGH LETTERS, WHERE INDICATED.
74	PAINT ACCESSIBLE LOADING AISLE PER DETAIL 02 SHEET C7.02. PAINT WORDS "NO PARKING" IN 12" HIGH LETTERS, WHERE INDICATED
75	FURNISH AND INSTALL ACCESSIBLE PARKING SIGN PER DETAIL 13 SHEET C7.02.
76	FURNISH AND INSTALL VAN ACCESSIBLE PARKING SIGN PER DETAIL 13 SHEET C7.02.
77	EXISTING ACCESSIBLE PARKING SIGN. VERIFY COMPLIANCE WITH DETAIL 13 SHEET C7.02. FURNISH NEW IF NOT IN COMPLIANCE.
78	INSTALL CONCRETE WHEEL STOP PER DETAIL 12 SHEET C7.02.
79	FIRE LANE AREA: 4" WIDE WHITE STRIPE AT 45° ANGLE AT 3' SPACING OC PAINT WORDS "NO PARKING - FIRE LANE" IN 12" HIGH LETTERS, WHERE INDICATED.
80	NO-PARKING AREA: 4" WIDE WHITE STRIPE AT 45° ANGLE AT 3' SPACING OC PAINT WORDS "NO PARKING" IN 12" HIGH LETTERS, WHERE INDICATED.
81	TRUNCATED DOME TILES PER DETAIL 10 SHEET L5.01.
82	CONSTRUCT DUAL ACCESSIBLE RAMP PER DETAIL 10 SHEET C7.02. LENGTH PER PLAN.
83	CONSTRUCT SINGLE ACCESSIBLE RAMP WITH FLARE PER DETAIL 09 SHEET C7.02. LENGTH PER PLAN.
84	LOADING ZONE AREA: 4" WIDE WHITE STRIPE AT 45° ANGLE AT 3' SPACING OC PAINT WORDS "LOADING ZONE ONLY" IN 12" HIGH LETTERS, WHERE INDICATED.
85	DIRECTIONAL ISA SIGN PER DETAIL 17 SHEET C7.02. REFER TO PLAN FOR DIRECTIONAL ARROW ORIENTATION.
86	SERVICE GATE ONLY SIGN PER DETAIL 18 SHEET C7.02.

STRIPING NOTES

1. ALL EXISTING STRIPING AND MARKINGS TO REMAIN UNLESS OTHERWISE NOTED. CONFLICTS BETWEEN EXISTING AND PROPOSED SHALL BE RESOLVED BY THE ENGINEER.
2. REMOVAL OF EXISTING STRIPING AND PAVEMENT MARKINGS SHALL BE ACCOMPLISHED BY WET SANDBLASTING OR OTHER APPROVED GRINDING METHOD PRIOR TO INSTALLATION OF NEW STRIPING. ALL CONFLICTING STRIPING, PAVEMENT MARKINGS, AND RAISED PAVEMENT MARKERS SHALL BE REMOVED.
3. PAVEMENT THAT IS DAMAGED DUE TO THE REMOVAL OF MARKERS OR STRIPING SHALL BE REPAIRED TO THE SATISFACTION OF THE OWNER.

IDENTIFICATION STAMP
DIV. OF THE STATE ARCHITECT
APP: 02-119490 INC:
REVIEWED FOR
SS ☑ FLS ☑ ACS ☑
DATE: 09/13/2022

LPA
ARCHITECTURE ENGINEERING INTERIORS
LANDSCAPE ARCHITECTURE PLANNING

916-287-2400 Office
916-287-2401 Fax
LPADesignStudios.com
431 I Street,
Suite 107
Sacramento, California 95814

REGISTERED PROFESSIONAL ENGINEER
KATHLEEN M. SHINKAI
R.C.E. 68369
EXP. 9-30-23
CIVIL
STATE OF CALIFORNIA

This document and all other project documents, ideas, aesthetics and designs incorporated therein are instruments of service. All project documents are copyright protected, are the property of LPA, Inc. (LPA) and cannot be lawfully used in whole or in part for any project or purpose except as set forth in the contractual agreement between LPA and its Client. The unauthorized disclosure and/or use of the project documents (including the creation of derivative works), may give rise to liability for copyright infringement, unlawful disclosure, use or misappropriation of property rights held by LPA. The unauthorized use of the project documents will give rise to the recovery of monetary losses and damages including attorney fees and costs for which the unauthorized user will be held liable.
Project documents describe the design intent of the work and are not a representation of as-built or existing conditions. LPA is not responsible for any discrepancies between the project documents and the existing conditions.

© LPA, Inc.

DAVIS HIGH SCHOOL
AQUATICS CENTER
315 WEST 14TH ST, DAVIS, CA 95616

Developed for
DAVIS JOINT UNIFIED SCHOOL DISTRICT

Revision	Date

Submittal	Date
50% DD REVIEW	06/15/2021
100% DESIGN DEVELOPMENT	07/26/2021
50% CD REVIEW	10/08/2021
100% CD DSA SUBMITTAL	10/22/2021
DSA SUBMITTAL	02/24/2022

Job Number	19044.13
Date Published	03/24/2022
Checked By	K. SHINKAI
Scale	1" = 10'

HORIZONTAL CONTROL, PAVING, STRIPING, AND SIGNAGE PLAN

C5.01

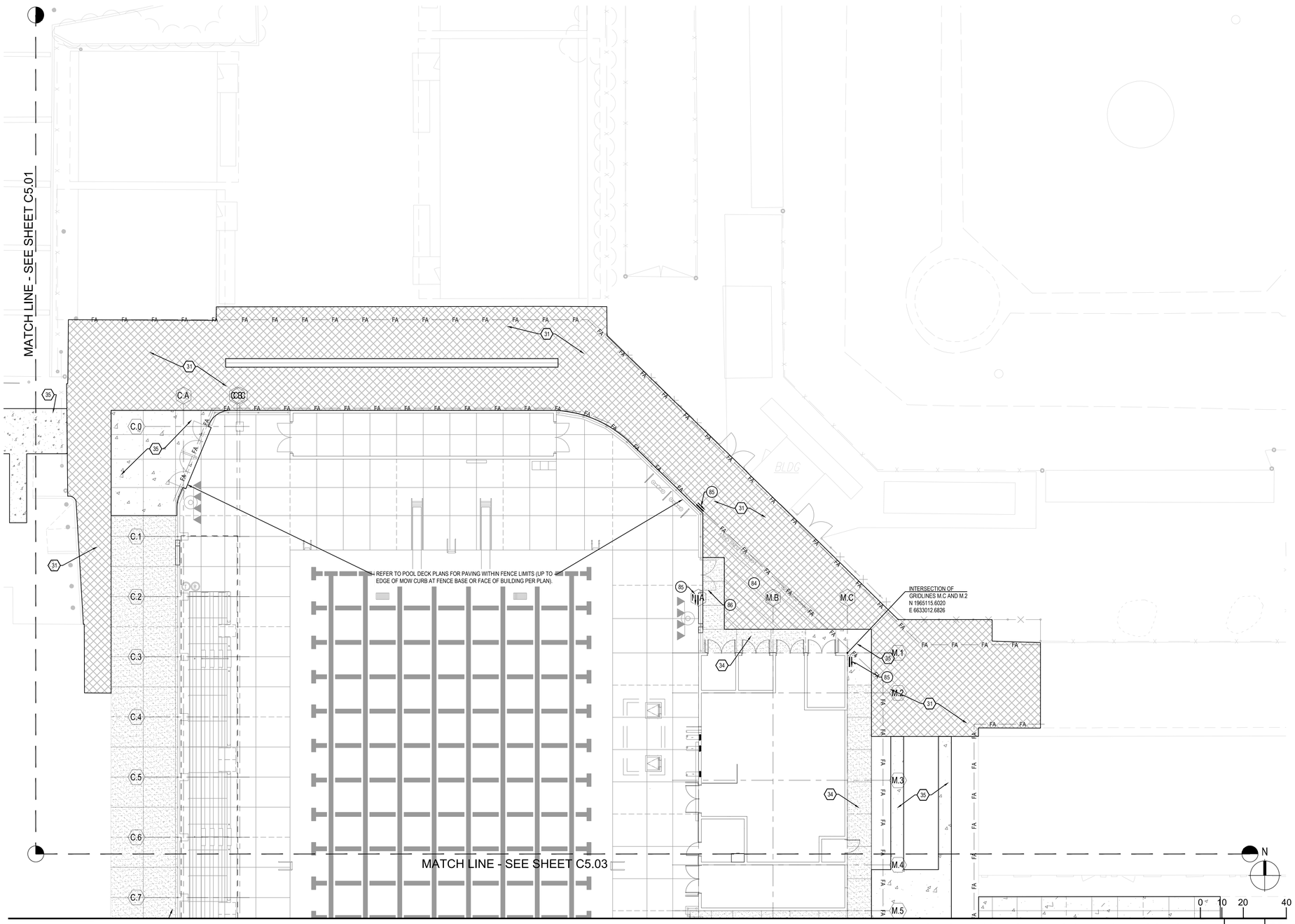

HORIZONTAL CONTROL, PAVING, STRIPING, AND SIGNAGE PLAN 1" = 10' 05

PAVING NOTES:

1. SEE LANDSCAPE PLANS FOR PAVERS, LOCATION AND TYPE OF CONCRETE WALKS AND HARDSCAPE INCLUDING DETAILS FOR CONCRETE FINISHES, CONTROL JOINTS AND EXPANSION JOINTS.
2. VERIFY ALL VEHICULAR AND NON-VEHICULAR LIMITS WITH LANDSCAPE PLANS.
3. ALL EXTERIOR CONCRETE FLATWORK TO BE CONSTRUCTED ON A MINIMUM OF 12 INCHES OF NON-EXPANSIVE COMPACTABLE SOIL. REFER TO THE GEOTECHNICAL REPORT FOR ADDITIONAL DETAILS AND REQUIREMENTS.

PAVING LEGEND

SYMBOL	DESCRIPTION
30	PARKING STALL AC PAVEMENT 3" AC OVER 10" AB PER GEOTECHNICAL ENGINEER'S RECOMMENDATION.
31	HEAVY DUTY AC PAVEMENT 3" AC OVER 16" AB PER GEOTECHNICAL ENGINEER'S RECOMMENDATION.
32	AC PAVEMENT OVERLAY INSTALL ASPHALT PAVEMENT, MINIMUM 4" THICKNESS, OVER BASE TO REMAIN.
34	PEDESTRIAN CONCRETE PAVEMENT 6" PCC OVER 4" AB MINIMUM, OR AS PER GEOTECHNICAL ENGINEER'S RECOMMENDATION. SEE LANDSCAPING PLANS FOR DETAILS.
35	VEHICULAR CONCRETE PAVEMENT 6" PCC OVER 6" AB MINIMUM, OR AS PER GEOTECHNICAL ENGINEER'S RECOMMENDATION. SEE LANDSCAPING PLANS FOR DETAILS.
PA	PLANTING AREA SEE LANDSCAPE PLANS.
FA	FIRE ACCESS: PAINT CURB RED PER DETAIL 11, SHEET C7.02. COORDINATE WITH APPROVED FIRE ACCESS PLAN.

CONSTRUCTION NOTES:

KEY NOTE	DESCRIPTION
70	PAINT PARKING STALL STRIPING: 4" WIDE STRIPE, WHITE, THERMOPLASTIC.
71	PAINT AND FURNISH ANGULAR ACCESSIBLE PARKING STALL PER DETAIL 01 SHEET C7.02.
72	PAINT AND FURNISH PERPENDICULAR ACCESSIBLE PARKING STALL PER DETAIL 02 SHEET C7.02.
73	PAINT ACCESSIBLE LOADING AISLE PER DETAIL 01 SHEET C7.02. PAINT WORDS "NO PARKING" IN 12" HIGH LETTERS, WHERE INDICATED.
74	PAINT ACCESSIBLE LOADING AISLE PER DETAIL 02 SHEET C7.02. PAINT WORDS "NO PARKING" IN 12" HIGH LETTERS, WHERE INDICATED
75	FURNISH AND INSTALL ACCESSIBLE PARKING SIGN PER DETAIL 13 SHEET C7.02.
76	FURNISH AND INSTALL VAN ACCESSIBLE PARKING SIGN PER DETAIL 13 SHEET C7.02.
77	EXISTING ACCESSIBLE PARKING SIGN. VERIFY COMPLIANCE WITH DETAIL 13 SHEET C7.02. FURNISH NEW IF NOT IN COMPLIANCE.
78	INSTALL CONCRETE WHEEL STOP PER DETAIL 12 SHEET C7.02.
79	FIRE LANE AREA: 4" WIDE WHITE STRIPE AT 45° ANGLE AT 3' SPACING OC PAINT WORDS "NO PARKING - FIRE LANE" IN 12" HIGH LETTERS, WHERE INDICATED.
80	NO-PARKING AREA: 4" WIDE WHITE STRIPE AT 45° ANGLE AT 3' SPACING OC PAINT WORDS "NO PARKING" IN 12" HIGH LETTERS, WHERE INDICATED.
81	TRUNCATED DOME TILES PER DETAIL 10 SHEET L5.01.
82	CONSTRUCT DUAL ACCESSIBLE RAMP PER DETAIL 10 SHEET C7.02. LENGTH PER PLAN.
83	CONSTRUCT SINGLE ACCESSIBLE RAMP WITH FLARE PER DETAIL 09 SHEET C7.02. LENGTH PER PLAN.
84	LOADING ZONE AREA: 4" WIDE WHITE STRIPE AT 45° ANGLE AT 3' SPACING OC PAINT WORDS "LOADING ZONE ONLY" IN 12" HIGH LETTERS, WHERE INDICATED.
85	DIRECTIONAL ISA SIGN PER DETAIL 17 SHEET C7.02. REFER TO PLAN FOR DIRECTIONAL ARROW ORIENTATION.
86	SERVICE GATE ONLY SIGN PER DETAIL 18 SHEET C7.02.

STRIPING NOTES

1. ALL EXISTING STRIPING AND MARKINGS TO REMAIN UNLESS OTHERWISE NOTED. CONFLICTS BETWEEN EXISTING AND PROPOSED SHALL BE RESOLVED BY THE ENGINEER.
2. REMOVAL OF EXISTING STRIPING AND PAVEMENT MARKINGS SHALL BE ACCOMPLISHED BY WET SANDBLASTING OR OTHER APPROVED GRINDING METHOD PRIOR TO INSTALLATION OF NEW STRIPING. ALL CONFLICTING STRIPING, PAVEMENT MARKINGS, AND RAISED PAVEMENT MARKERS SHALL BE REMOVED.
3. PAVEMENT THAT IS DAMAGED DUE TO THE REMOVAL OF MARKERS OR STRIPING SHALL BE REPAIRED TO THE SATISFACTION OF THE OWNER.

IDENTIFICATION STAMP
DIV. OF THE STATE ARCHITECT
APP: 02-119490 INC:
REVIEWED FOR
SS ☑ FLS ☑ ACS ☑
DATE: 09/13/2022

LPA
ARCHITECTURE ENGINEERING INTERIORS
LANDSCAPE ARCHITECTURE PLANNING

916-287-2400 Office
916-287-2401 Fax
LPADesignStudios.com
431 I Street,
Suite 107
Sacramento, California 95814

REGISTERED PROFESSIONAL ENGINEER
KATHLEEN M. SHINKAI
R.C.E. 68369
EXP. 9-30-23
CIVIL
STATE OF CALIFORNIA

This document and all other project documents, ideas, aesthetics and designs incorporated therein are instruments of service. All project documents are copyright protected, are the property of LPA, Inc. (LPA) and cannot be lawfully used in whole or in part for any project or purpose except as set forth in the contractual agreement between LPA and its Client. The unauthorized disclosure and/or use of the project documents (including the creation of derivative works), may give rise to liability for copyright infringement, unlawful disclosure, use or misappropriation of property rights held by LPA. The unauthorized use of the project documents will give rise to the recovery of monetary losses and damages including attorney fees and costs for which the unauthorized user will be held liable.
Project documents describe the design intent of the work and are not a representation of as-built or existing conditions. LPA is not responsible for any discrepancies between the project documents and the existing conditions.

© LPA, Inc.

DAVIS HIGH SCHOOL
AQUATICS CENTER
315 WEST 14TH ST, DAVIS, CA 95616

Developed for
DAVIS JOINT UNIFIED SCHOOL DISTRICT

Revision	Date

Submittal	Date
50% DD REVIEW	06/15/2021
100% DESIGN DEVELOPMENT	07/26/2021
50% CD REVIEW	10/08/2021
100% CD DSA SUBMITTAL	10/22/2021
DSA SUBMITTAL	03/24/2022

Job Number	19044.13
Date Published	03/24/2022
Checked By	K. SHINKAI
Scale	1" = 10'

HORIZONTAL CONTROL, PAVING, STRIPING, AND SIGNAGE PLAN

C5.02

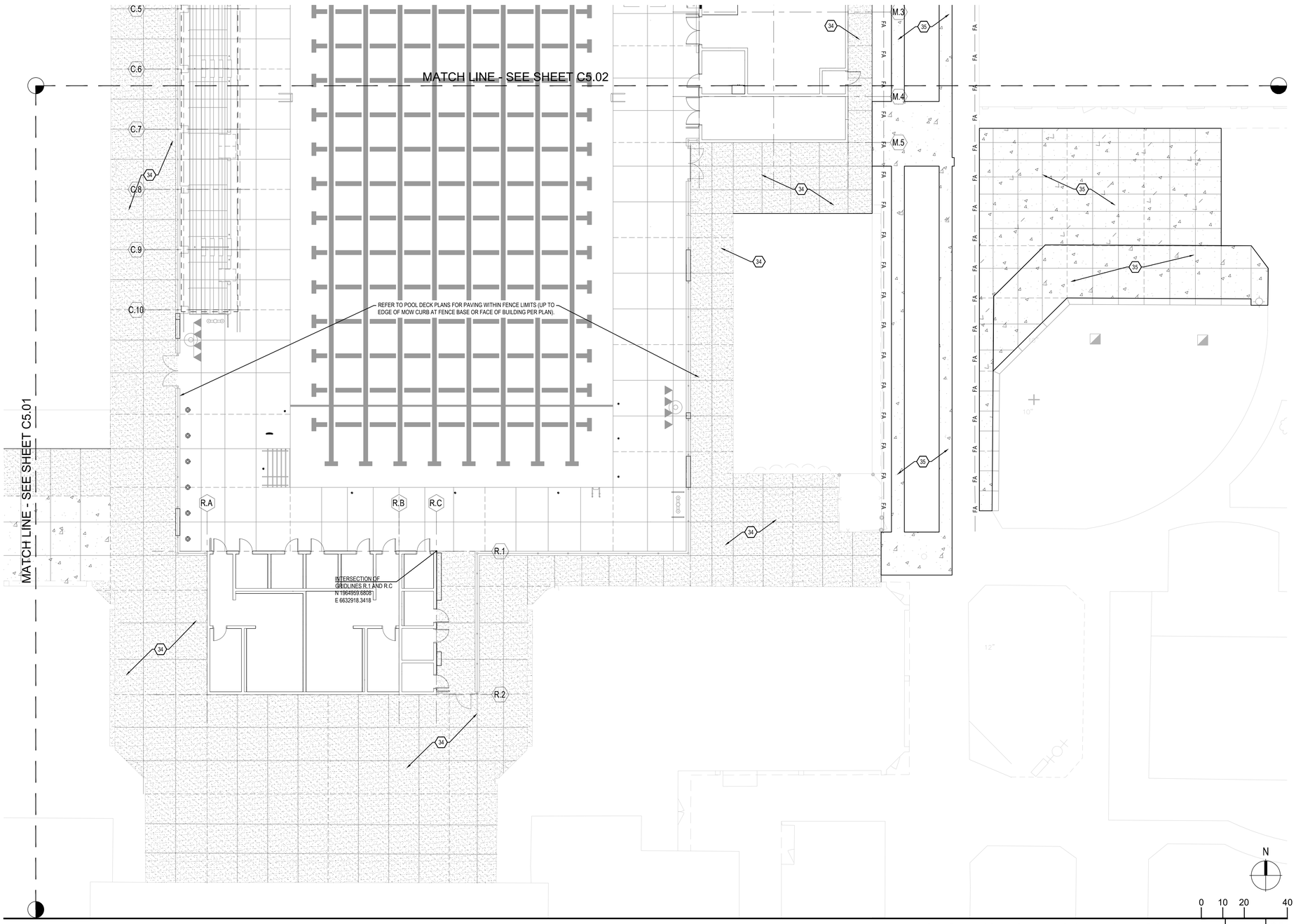

HORIZONTAL CONTROL, PAVING, STRIPING, AND SIGNAGE PLAN | 1" = 10' | 05

PAVING NOTES:

1. SEE LANDSCAPE PLANS FOR PAVERS, LOCATION AND TYPE OF CONCRETE WALKS AND HARDSCAPE INCLUDING DETAILS FOR CONCRETE FINISHES, CONTROL JOINTS AND EXPANSION JOINTS.
2. VERIFY ALL VEHICULAR AND NON-VEHICULAR LIMITS WITH LANDSCAPE PLANS.
3. ALL EXTERIOR CONCRETE FLATWORK TO BE CONSTRUCTED ON A MINIMUM OF 12 INCHES OF NON-EXPANSIVE COMPACTABLE SOIL. REFER TO THE GEOTECHNICAL REPORT FOR ADDITIONAL DETAILS AND REQUIREMENTS.

PAVING LEGEND

SYMBOL	DESCRIPTION
30	PARKING STALL AC PAVEMENT 3" AC OVER 10" AB PER GEOTECHNICAL ENGINEER'S RECOMMENDATION.
31	HEAVY DUTY AC PAVEMENT 3" AC OVER 16" AB PER GEOTECHNICAL ENGINEER'S RECOMMENDATION.
32	AC PAVEMENT OVERLAY INSTALL ASPHALT PAVEMENT, MINIMUM 4" THICKNESS, OVER BASE TO REMAIN.
34	PEDESTRIAN CONCRETE PAVEMENT 6" PCC OVER 4" AB MINIMUM, OR AS PER GEOTECHNICAL ENGINEER'S RECOMMENDATION. SEE LANDSCAPING PLANS FOR DETAILS.
35	VEHICULAR CONCRETE PAVEMENT 6" PCC OVER 6" AB MINIMUM, OR AS PER GEOTECHNICAL ENGINEER'S RECOMMENDATION. SEE LANDSCAPING PLANS FOR DETAILS.
PA	PLANTING AREA SEE LANDSCAPE PLANS.
FA	FIRE ACCESS: PAINT CURB RED PER DETAIL 11, SHEET C7.02. COORDINATE WITH APPROVED FIRE ACCESS PLAN.

CONSTRUCTION NOTES:

KEY NOTE	DESCRIPTION
70	PAINT PARKING STALL STRIPING: 4" WIDE STRIPE, WHITE, THERMOPLASTIC.
71	PAINT AND FURNISH ANGULAR ACCESSIBLE PARKING STALL PER DETAIL 01 SHEET C7.02.
72	PAINT AND FURNISH PERPENDICULAR ACCESSIBLE PARKING STALL PER DETAIL 02 SHEET C7.02.
73	PAINT ACCESSIBLE LOADING AISLE PER DETAIL 01 SHEET C7.02. PAINT WORDS "NO PARKING" IN 12" HIGH LETTERS, WHERE INDICATED.
74	PAINT ACCESSIBLE LOADING AISLE PER DETAIL 02 SHEET C7.02. PAINT WORDS "NO PARKING" IN 12" HIGH LETTERS, WHERE INDICATED
75	FURNISH AND INSTALL ACCESSIBLE PARKING SIGN PER DETAIL 13 SHEET C7.02.
76	FURNISH AND INSTALL VAN ACCESSIBLE PARKING SIGN PER DETAIL 13 SHEET C7.02.
77	EXISTING ACCESSIBLE PARKING SIGN. VERIFY COMPLIANCE WITH DETAIL 13 SHEET C7.02. FURNISH NEW IF NOT IN COMPLIANCE.
78	INSTALL CONCRETE WHEEL STOP PER DETAIL 12 SHEET C7.02.
79	FIRE LANE AREA: 4" WIDE WHITE STRIPE AT 45° ANGLE AT 3' SPACING OC PAINT WORDS "NO PARKING - FIRE LANE" IN 12" HIGH LETTERS, WHERE INDICATED.
80	NO-PARKING AREA: 4" WIDE WHITE STRIPE AT 45° ANGLE AT 3' SPACING OC PAINT WORDS "NO PARKING" IN 12" HIGH LETTERS, WHERE INDICATED.
81	TRUNCATED DOME TILES PER DETAIL 10 SHEET L5.01.
82	CONSTRUCT DUAL ACCESSIBLE RAMP PER DETAIL 10 SHEET C7.02. LENGTH PER PLAN.
83	CONSTRUCT SINGLE ACCESSIBLE RAMP WITH FLARE PER DETAIL 09 SHEET C7.02. LENGTH PER PLAN.
84	LOADING ZONE AREA: 4" WIDE WHITE STRIPE AT 45° ANGLE AT 3' SPACING OC PAINT WORDS "LOADING ZONE ONLY" IN 12" HIGH LETTERS, WHERE INDICATED.
85	DIRECTIONAL ISA SIGN PER DETAIL 17 SHEET C7.02. REFER TO PLAN FOR DIRECTIONAL ARROW ORIENTATION.
86	SERVICE GATE ONLY SIGN PER DETAIL 18 SHEET C7.02.

STRIPING NOTES

1. ALL EXISTING STRIPING AND MARKINGS TO REMAIN UNLESS OTHERWISE NOTED. CONFLICTS BETWEEN EXISTING AND PROPOSED SHALL BE RESOLVED BY THE ENGINEER.
2. REMOVAL OF EXISTING STRIPING AND PAVEMENT MARKINGS SHALL BE ACCOMPLISHED BY WET SANDBLASTING OR OTHER APPROVED GRINDING METHOD PRIOR TO INSTALLATION OF NEW STRIPING. ALL CONFLICTING STRIPING, PAVEMENT MARKINGS, AND RAISED PAVEMENT MARKERS SHALL BE REMOVED.
3. PAVEMENT THAT IS DAMAGED DUE TO THE REMOVAL OF MARKERS OR STRIPING SHALL BE REPAIRED TO THE SATISFACTION OF THE OWNER.

IDENTIFICATION STAMP
DIV. OF THE STATE ARCHITECT
APP: 02-119490 INC:
REVIEWED FOR
SS ☑ FLS ☑ ACS ☑
DATE: 09/13/2022

LPA
ARCHITECTURE ENGINEERING INTERIORS
LANDSCAPE ARCHITECTURE PLANNING

916-287-2400 Office
916-287-2401 Fax
LPADesignStudios.com
431 I Street,
Suite 107
Sacramento, California 95814

REGISTERED PROFESSIONAL ENGINEER
KATHLEEN M. SHINKAI
R.C.E. 68369
EXP. 9-30-23
STATE OF CALIFORNIA

This document and all other project documents, ideas, aesthetics and designs incorporated therein are instruments of service. All project documents are copyright protected, are the property of LPA, Inc. (LPA) and cannot be lawfully used in whole or in part for any project or purpose except as set forth in the contractual agreement between LPA and its Client. The unauthorized disclosure and/or use of the project documents (including the creation of derivative works), may give rise to liability for copyright infringement, unlawful disclosure, use or misappropriation of property rights held by LPA. The unauthorized use of the project documents will give rise to the recovery of monetary losses and damages including attorney fees and costs for which the unauthorized user will be held liable.
Project documents describe the design intent of the work and are not a representation of as-built or existing conditions. LPA is not responsible for any discrepancies between the project documents and the existing conditions.

© LPA, Inc.

DAVIS HIGH SCHOOL
AQUATICS CENTER
315 WEST 14TH ST, DAVIS, CA 95616

Developed for
DAVIS JOINT UNIFIED SCHOOL DISTRICT

Revision	Date

Submittal	Date
50% DD REVIEW	06/15/2021
100% DESIGN DEVELOPMENT	07/26/2021
50% CD REVIEW	10/08/2021
100% CD DSA SUBMITTAL	10/22/2021
DSA SUBMITTAL	03/24/2022

Job Number	19044.13
Date Published	03/24/2022
Checked By	K. SHINKAI
Scale	1" = 10'

HORIZONTAL CONTROL, PAVING, STRIPING, AND SIGNAGE PLAN

C5.03

PAVING NOTES:

1. SEE LANDSCAPE PLANS FOR PAVERS, LOCATION AND TYPE OF CONCRETE WALKS AND HARDSCAPE INCLUDING DETAILS FOR CONCRETE FINISHES, CONTROL JOINTS AND EXPANSION JOINTS.
2. VERIFY ALL VEHICULAR AND NON-VEHICULAR LIMITS WITH LANDSCAPE PLANS.
3. ALL EXTERIOR CONCRETE FLATWORK TO BE CONSTRUCTED ON A MINIMUM OF 12 INCHES OF NON-EXPANSIVE COMPACTABLE SOIL. REFER TO THE GEOTECHNICAL REPORT FOR ADDITIONAL DETAILS AND REQUIREMENTS.

PAVING LEGEND

SYMBOL	DESCRIPTION
30	PARKING STALL AC PAVEMENT 3" AC OVER 10" AB PER GEOTECHNICAL ENGINEER'S RECOMMENDATION.
31	HEAVY DUTY AC PAVEMENT 3" AC OVER 16" AB PER GEOTECHNICAL ENGINEER'S RECOMMENDATION.
32	AC PAVEMENT OVERLAY INSTALL ASPHALT PAVEMENT, MINIMUM 4" THICKNESS, OVER BASE TO REMAIN.
34	PEDESTRIAN CONCRETE PAVEMENT 6" PCC OVER 4" AB MINIMUM, OR AS PER GEOTECHNICAL ENGINEER'S RECOMMENDATION. SEE LANDSCAPING PLANS FOR DETAILS.
35	VEHICULAR CONCRETE PAVEMENT 6" PCC OVER 6" AB MINIMUM, OR AS PER GEOTECHNICAL ENGINEER'S RECOMMENDATION. SEE LANDSCAPING PLANS FOR DETAILS.
PA	PLANTING AREA SEE LANDSCAPE PLANS.
FA	FIRE ACCESS: PAINT CURB RED PER DETAIL 11, SHEET C7.02. COORDINATE WITH APPROVED FIRE ACCESS PLAN.

CONSTRUCTION NOTES:

KEY NOTE	DESCRIPTION
70	PAINT PARKING STALL STRIPING: 4" WIDE STRIPE, WHITE, THERMOPLASTIC.
71	PAINT AND FURNISH ANGULAR ACCESSIBLE PARKING STALL PER DETAIL 01 SHEET C7.02.
72	PAINT AND FURNISH PERPENDICULAR ACCESSIBLE PARKING STALL PER DETAIL 02 SHEET C7.02.
73	PAINT ACCESSIBLE LOADING AISLE PER DETAIL 01 SHEET C7.02. PAINT WORDS "NO PARKING" IN 12" HIGH LETTERS, WHERE INDICATED.
74	PAINT ACCESSIBLE LOADING AISLE PER DETAIL 02 SHEET C7.02. PAINT WORDS "NO PARKING" IN 12" HIGH LETTERS, WHERE INDICATED
75	FURNISH AND INSTALL ACCESSIBLE PARKING SIGN PER DETAIL 13 SHEET C7.02.
76	FURNISH AND INSTALL VAN ACCESSIBLE PARKING SIGN PER DETAIL 13 SHEET C7.02.
77	EXISTING ACCESSIBLE PARKING SIGN. VERIFY COMPLIANCE WITH DETAIL 13 SHEET C7.02. FURNISH NEW IF NOT IN COMPLIANCE.
78	INSTALL CONCRETE WHEEL STOP PER DETAIL 12 SHEET C7.02.
79	FIRE LANE AREA: 4" WIDE WHITE STRIPE AT 45° ANGLE AT 3' SPACING OC PAINT WORDS "NO PARKING - FIRE LANE" IN 12" HIGH LETTERS, WHERE INDICATED.
80	NO-PARKING AREA: 4" WIDE WHITE STRIPE AT 45° ANGLE AT 3' SPACING OC PAINT WORDS "NO PARKING" IN 12" HIGH LETTERS, WHERE INDICATED.
81	TRUNCATED DOME TILES PER DETAIL 10 SHEET L5.01.
82	CONSTRUCT DUAL ACCESSIBLE RAMP PER DETAIL 10 SHEET C7.02. LENGTH PER PLAN.
83	CONSTRUCT SINGLE ACCESSIBLE RAMP WITH FLARE PER DETAIL 09 SHEET C7.02. LENGTH PER PLAN.
84	LOADING ZONE AREA: 4" WIDE WHITE STRIPE AT 45° ANGLE AT 3' SPACING OC PAINT WORDS "LOADING ZONE ONLY" IN 12" HIGH LETTERS, WHERE INDICATED.
85	DIRECTIONAL ISA SIGN PER DETAIL 17 SHEET C7.02. REFER TO PLAN FOR DIRECTIONAL ARROW ORIENTATION.
86	SERVICE GATE ONLY SIGN PER DETAIL 18 SHEET C7.02.

STRIPING NOTES

1. ALL EXISTING STRIPING AND MARKINGS TO REMAIN UNLESS OTHERWISE NOTED. CONFLICTS BETWEEN EXISTING AND PROPOSED SHALL BE RESOLVED BY THE ENGINEER.
2. REMOVAL OF EXISTING STRIPING AND PAVEMENT MARKINGS SHALL BE ACCOMPLISHED BY WET SANDBLASTING OR OTHER APPROVED GRINDING METHOD PRIOR TO INSTALLATION OF NEW STRIPING. ALL CONFLICTING STRIPING, PAVEMENT MARKINGS, AND RAISED PAVEMENT MARKERS SHALL BE REMOVED.
3. PAVEMENT THAT IS DAMAGED DUE TO THE REMOVAL OF MARKERS OR STRIPING SHALL BE REPAIRED TO THE SATISFACTION OF THE OWNER.

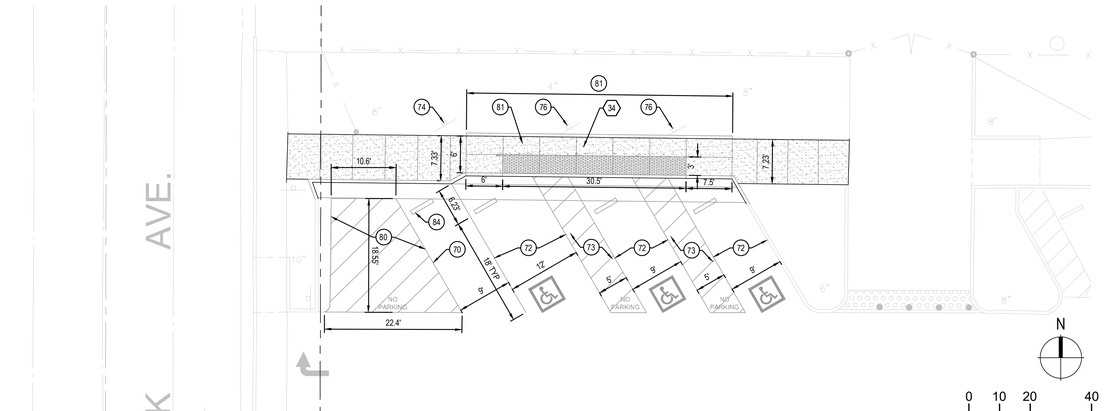

HORIZONTAL CONTROL, PAVING, STRIPING, AND SIGNAGE PLAN | 1" = 10' | 05

IDENTIFICATION STAMP
DIV. OF THE STATE ARCHITECT
APP: 02-119490 INC:
REVIEWED FOR
SS ☑ FLS ☑ ACS ☑
DATE: 09/13/2022

LPA
ARCHITECTURE ENGINEERING INTERIORS
LANDSCAPE ARCHITECTURE PLANNING

916-287-2400 Office
916-287-2401 Fax
LPADesignStudios.com
431 I Street,
Suite 107
Sacramento, California 95814

REGISTERED PROFESSIONAL ENGINEER
KATHLEEN M. SHINKAI
R.C.E. 68369
EXP. 9-30-23
CIVIL
STATE OF CALIFORNIA

This document and all other project documents, ideas, aesthetics and designs incorporated therein are instruments of service. All project documents are copyright protected, are the property of LPA, Inc. (LPA) and cannot be lawfully used in whole or in part for any project or purpose except as set forth in the contractual agreement between LPA and its Client. The unauthorized disclosure and/or use of the project documents (including the creation of derivative works), may give rise to liability for copyright infringement, unlawful disclosure, use or misappropriation of property rights held by LPA. The unauthorized use of the project documents will give rise to the recovery of monetary losses and damages including attorney fees and costs for which the unauthorized user will be held liable.
Project documents describe the design intent of the work and are not a representation of as-built or existing conditions. LPA is not responsible for any discrepancies between the project documents and the existing conditions.

© LPA, Inc.

DAVIS HIGH SCHOOL
AQUATICS CENTER
315 WEST 14TH ST, DAVIS, CA 95616

Developed for
DAVIS JOINT UNIFIED SCHOOL DISTRICT

Revision	Date

Submittal	Date
50% DD REVIEW	06/15/2021
100% DESIGN DEVELOPMENT	07/26/2021
50% CD REVIEW	10/08/2021
100% CD DSA SUBMITTAL	10/22/2021
DSA SUBMITTAL	03/24/2022

Job Number	19044.13
Date Published	03/24/2022
Checked By	K. SHINKAI
Scale	1" = 10'

HORIZONTAL CONTROL, PAVING, STRIPING, AND SIGNAGE PLAN

C5.04

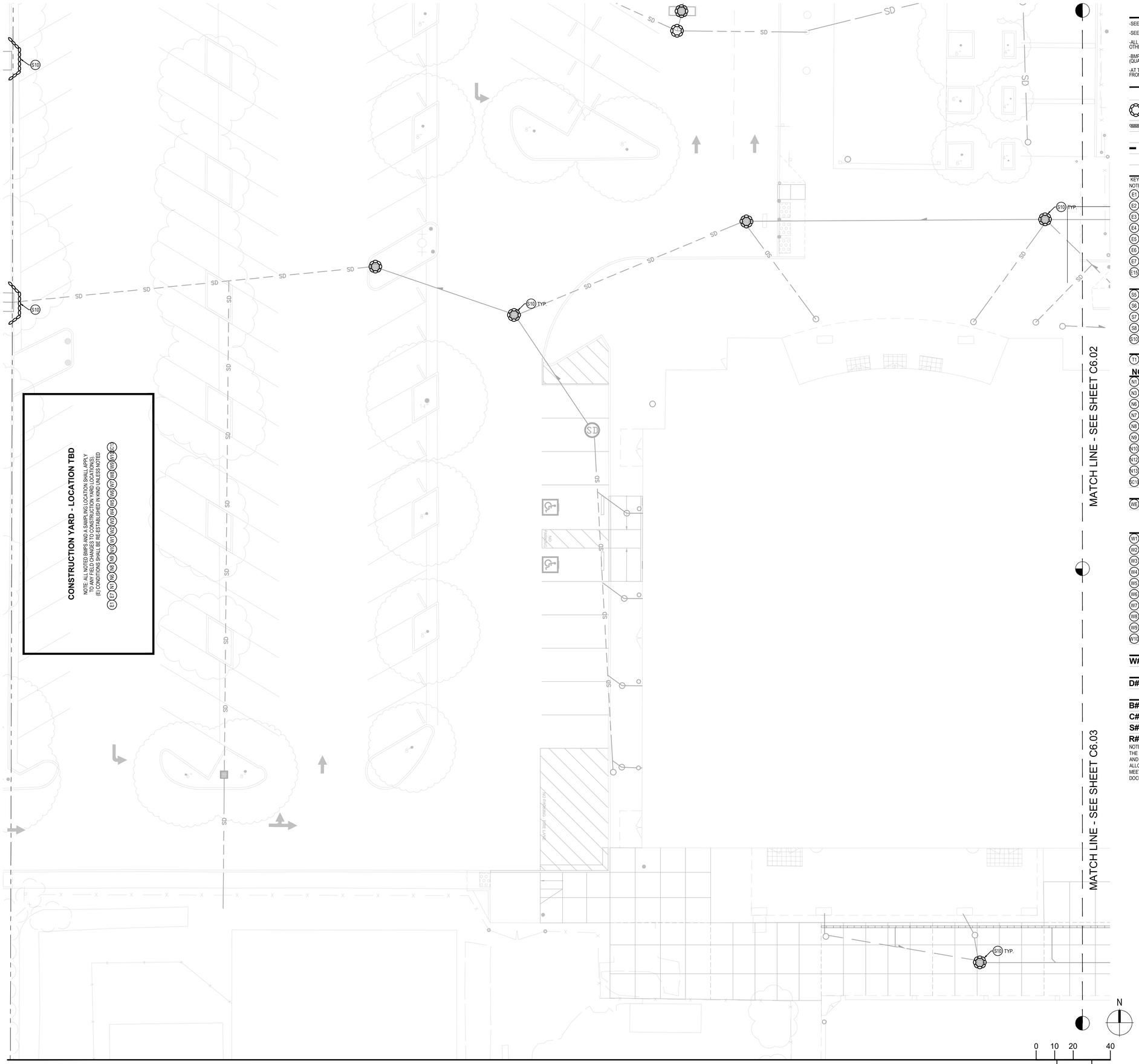

EROSION CONTROL PLAN | 1" = 10' | 05

EROSION CONTROL NOTES

-SEE SHEET C0.01 FOR EROSION AND SEDIMENT CONTROL NOTES.

-SEE SHEET C0.01 FOR BMP MAINTENANCE NOTES.

-ALL BMPS PER CALIFORNIA STORMWATER QUALITY ASSOCIATION (CASQA)(UNLESS NOTED OTHERWISE) AND ARE AVAILABLE AT www.casqa.org.

-BMPS "NOT" CALLED OUT PER PLAN, ARE SHOWN FOR REFERENCE AS BMP OPTIONS PER QSP (QUALIFIED SWPPP PRACTITIONER) FIELD RECOMMENDATIONS.

-AT THE COMPLETION OF PROJECT, CONTRACTOR SHALL REMOVE ALL CONSTRUCTION BMPS FROM SITE AND DISPOSE IN A LEGAL MANNER.

LEGEND

SYMBOL	DESCRIPTION
	GRAVEL BAGS AND/OR SANDBAGS PER BMP KEYNOTES
	FIBER ROLL
	APPROXIMATE LIMIT OF GRADING
	FLOW DIRECTION

EROSION CONTROL BMPs:

KEY NOTE	DESCRIPTION
E1	EC-1, SCHEDULING
E2	EC-2, PRESERVATION OF EXISTING VEGETATION
E3	EC-3, HYDRAULIC MULCH
E4	EC-4, HYDROSEEDING
E5	EC-5, SOIL BINDERS
E6	EC-6, STRAW MULCH
E7	EC-7, GEOTEXTILES AND MATS
E15	EC-15, SOIL PREPARATION/ROUGHENING

SEDIMENT CONTROL BMPs:

S5	SE-5, FIBER ROLLS
S6	SE-6, GRAVEL BAG BERM
S7	SE-7, STREET SWEEPING AND VACUUMING
S8	SE-8, SANDBAG BARRIER
S10	SE-10, STORM DRAIN INLET PROTECTION

TRACKING CONTROL BMPs:

T1	TC-1, STABILIZED CONSTRUCTION ENTRANCE/EXIT

NON-STORMWATER MANAGEMENT CONTROL BMPs:

N1	NS-1, WATER CONSERVATION PRACTICES
N3	NS-3, PAVING AND GRINDING OPERATIONS
N6	NS-6, ILLICIT CONNECTION/DISCHARGE
N7	NS-7, POTABLE WATER/IRRIGATION
N8	NS-8, VEHICLE AND EQUIPMENT CLEANING
N9	NS-9, VEHICLE AND EQUIPMENT FUELING
N10	NS-10, VEHICLE AND EQUIPMENT MAINTENANCE
N12	NS-12, CONCRETE CURING
N13	NS-13, CONCRETE FINISHING
SC10	SC-10, NON-STORMWATER DISCHARGES

WIND EROSION CONTROL BMPs:

WE	WE-1, WIND EROSION CONTROL

WASTE MANAGEMENT AND MATERIALS POLLUTION CONTROL BMPs:

W1	WM-1, MATERIAL DELIVERY AND STORAGE
W2	WM-2, MATERIAL USE
W3	WM-3, STOCKPILE MANAGEMENT
W4	WM-4, SPILL PREVENTION AND CONTROL
W5	WM-5, SOLID WASTE MANAGEMENT
W6	WM-6, HAZARDOUS WASTE MANAGEMENT
W7	WM-7, CONTAMINATED SOIL MANAGEMENT
W8	WM-8, CONCRETE WASTE MANAGEMENT
W9	WM-9, SANITARY/SEPTIC WASTE MANAGEMENT
W10	WM-10, LIQUID WASTE MANAGEMENT

STORM WATER STORAGE OR CONTAINMENT

W# STORMWATER TREATMENT DEVICE LOCATION

DISCHARGE LOCATIONS

D# DISCHARGE LOCATION

SAMPLING LOCATIONS

B# POLLUTANT SAMPLE LOCATION - BACKGROUND SAMPLE

C# POLLUTANT SAMPLE LOCATION - CONTRACTORS YARD

S# POLLUTANT SAMPLE LOCATION - SITE

R# POLLUTANT SAMPLE LOCATION - RUN-ON

NOTE:
THE SAMPLE LOCATIONS SHOWN ARE THE MINIMUM REQUIREMENT FOR THE PROJECT SITE AND RISK LEVEL X. SAMPLE LOCATIONS MAY BE RELOCATED IF FIELD CONDITIONS WILL NOT ALLOW FOR SATISFACTORY SAMPLING. ANY ADJUSTMENTS TO SAMPLING LOCATIONS MUST MEET THE INTENDED PURPOSE ORIGINALLY DESIGNATED FOR THAT LOCATION AND MUST BE DOCUMENTED WITH A SWPPP AMENDMENT FORM.

IDENTIFICATION STAMP
DIV. OF THE STATE ARCHITECT
APP: 02-119490 INC:
REVIEWED FOR
SS ☑ FLS ☑ ACS ☑
DATE: 09/13/2022

LPA

ARCHITECTURE ENGINEERING INTERIORS
LANDSCAPE ARCHITECTURE PLANNING

916-287-2400 Office

916-287-2401 Fax

LPADesignStudios.com

431 I Street,
Suite 107
Sacramento, California 95814

REGISTERED PROFESSIONAL ENGINEER
KATHLEEN M. SHINKAI
R.C.E. 68369
EXP. 9-30-23
CIVIL
STATE OF CALIFORNIA

This document and all other project documents, ideas, aesthetics and designs incorporated therein are instruments of service. All project documents are copyright protected, are the property of LPA, Inc. (LPA) and cannot be lawfully used in whole or in part for any project or purpose except as set forth in the contractual agreement between LPA and its Client. The unauthorized disclosure and/or use of the project documents (including the creation of derivative works), may give rise to liability for copyright infringement, unlawful disclosure, use or misappropriation of property rights held by LPA. The unauthorized use of the project documents will give rise to the recovery of monetary losses and damages including attorney fees and costs for which the unauthorized user will be held liable.
Project documents describe the design intent of the work and are not a representation of as-built or existing conditions. LPA is not responsible for any discrepancies between the project documents and the existing conditions.

© LPA, Inc.

DAVIS HIGH SCHOOL
AQUATICS CENTER
315 WEST 14TH ST, DAVIS, CA 95616

Developed for
DAVIS JOINT UNIFIED SCHOOL DISTRICT

Revision	Date

Submittal	Date
50% DD REVIEW	06/15/2021
100% DESIGN DEVELOPMENT	07/26/2021
50% CD REVIEW	10/08/2021
100% CD DSA SUBMITTAL	10/22/2021
DSA SUBMITTAL	03/24/2022

Job Number	19044.13
Date Published	03/24/2022
Checked By	K. SHINKAI
Scale	1" = 10'

EROSION CONTROL PLAN

C6.01

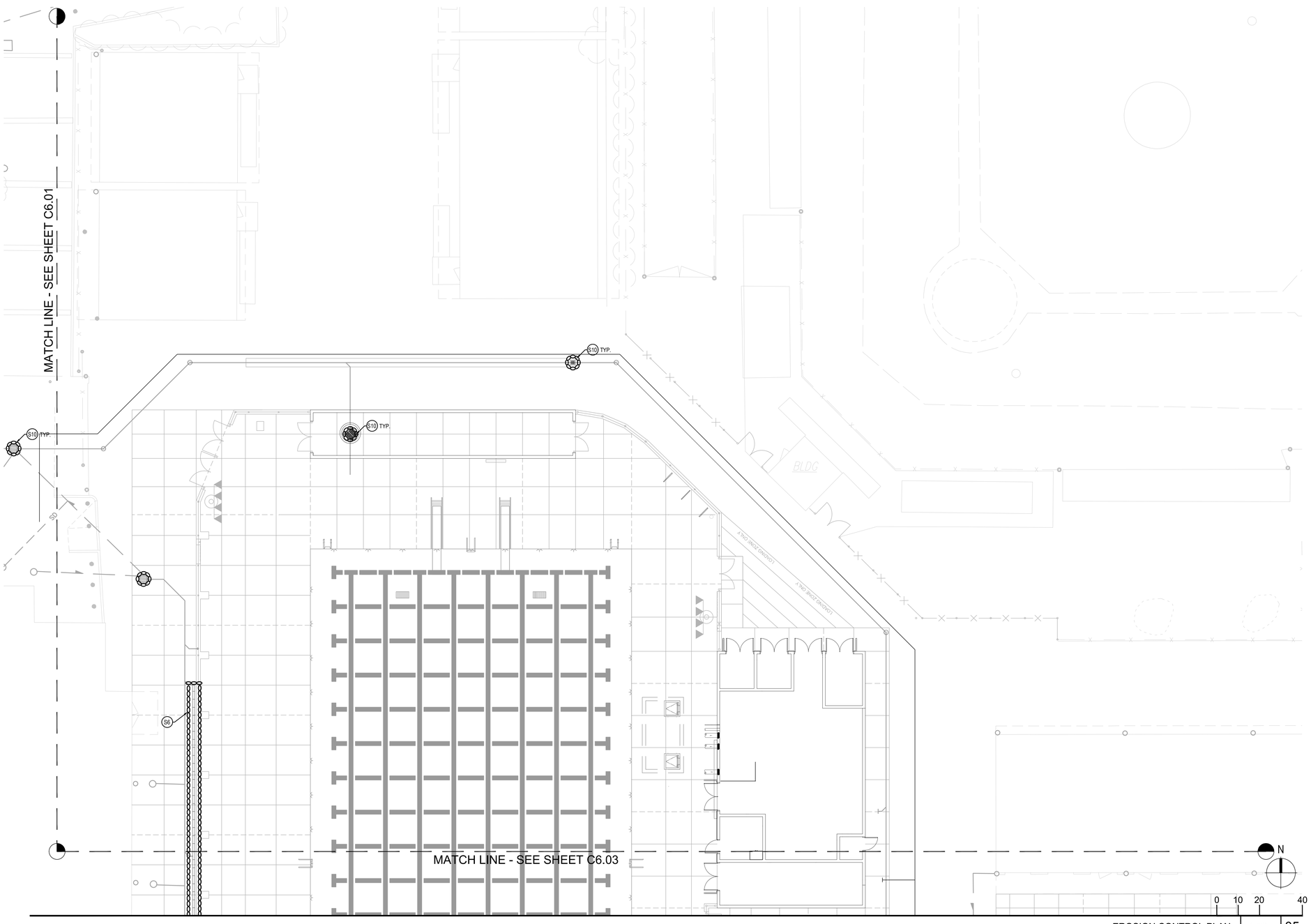

EROSION CONTROL PLAN 05

EROSION CONTROL NOTES

-SEE SHEET C0.01 FOR EROSION AND SEDIMENT CONTROL NOTES.

-SEE SHEET C0.01 FOR BMP MAINTENANCE NOTES.

-ALL BMPS PER CALIFORNIA STORMWATER QUALITY ASSOCIATION (CASQA)(UNLESS NOTED OTHERWISE) AND ARE AVAILABLE AT www.casqa.org.

-BMPS "NOT" CALLED OUT PER PLAN, ARE SHOWN FOR REFERENCE AS BMP OPTIONS PER QSP (QUALIFIED SWPPP PRACTITIONER) FIELD RECOMMENDATIONS.

-AT THE COMPLETION OF PROJECT, CONTRACTOR SHALL REMOVE ALL CONSTRUCTION BMPS FROM SITE AND DISPOSE IN A LEGAL MANNER.

LEGEND

SYMBOL	DESCRIPTION
	GRAVEL BAGS AND/OR SANDBAGS PER BMP KEYNOTES
	FIBER ROLL
	APPROXIMATE LIMIT OF GRADING
	FLOW DIRECTION

EROSION CONTROL BMPs:

KEY NOTE	DESCRIPTION
E1	EC-1, SCHEDULING
E2	EC-2, PRESERVATION OF EXISTING VEGETATION
E3	EC-3, HYDRAULIC MULCH
E4	EC-4, HYDROSEEDING
E5	EC-5, SOIL BINDERS
E6	EC-6, STRAW MULCH
E7	EC-7, GEOTEXTILES AND MATS
E15	EC-15, SOIL PREPARATION/ROUGHENING

SEDIMENT CONTROL BMPs:

S5	SE-5, FIBER ROLLS
S6	SE-6, GRAVEL BAG BERM
S7	SE-7, STREET SWEEPING AND VACUUMING
S8	SE-8, SANDBAG BARRIER
S10	SE-10, STORM DRAIN INLET PROTECTION

TRACKING CONTROL BMPs:

T1	TC-1, STABILIZED CONSTRUCTION ENTRANCE/EXIT

NON-STORMWATER MANAGEMENT CONTROL BMPs:

N1	NS-1, WATER CONSERVATION PRACTICES
N3	NS-3, PAVING AND GRINDING OPERATIONS
N6	NS-6, ILLICIT CONNECTION/DISCHARGE
N7	NS-7, POTABLE WATER/IRRIGATION
N8	NS-8, VEHICLE AND EQUIPMENT CLEANING
N9	NS-9, VEHICLE AND EQUIPMENT FUELING
N10	NS-10, VEHICLE AND EQUIPMENT MAINTENANCE
N12	NS-12, CONCRETE CURING
N13	NS-13, CONCRETE FINISHING
SC10	SC-10, NON-STORMWATER DISCHARGES

WIND EROSION CONTROL BMPs:

WE	WE-1, WIND EROSION CONTROL

WASTE MANAGEMENT AND MATERIALS POLLUTION CONTROL BMPs:

W1	WM-1, MATERIAL DELIVERY AND STORAGE
W2	WM-2, MATERIAL USE
W3	WM-3, STOCKPILE MANAGEMENT
W4	WM-4, SPILL PREVENTION AND CONTROL
W5	WM-5, SOLID WASTE MANAGEMENT
W6	WM-6, HAZARDOUS WASTE MANAGEMENT
W7	WM-7, CONTAMINATED SOIL MANAGEMENT
W8	WM-8, CONCRETE WASTE MANAGEMENT
W9	WM-9, SANITARY/SEPTIC WASTE MANAGEMENT
W10	WM-10, LIQUID WASTE MANAGEMENT

STORM WATER STORAGE OR CONTAINMENT

W#	STORMWATER TREATMENT DEVICE LOCATION

DISCHARGE LOCATIONS

D#	DISCHARGE LOCATION

SAMPLING LOCATIONS

B#	POLLUTANT SAMPLE LOCATION - BACKGROUND SAMPLE
C#	POLLUTANT SAMPLE LOCATION - CONTRACTORS YARD
S#	POLLUTANT SAMPLE LOCATION - SITE
R#	POLLUTANT SAMPLE LOCATION - RUN-ON

NOTE:
THE SAMPLE LOCATIONS SHOWN ARE THE MINIMUM REQUIREMENT FOR THE PROJECT SITE AND RISK LEVEL X. SAMPLE LOCATIONS MAY BE RELOCATED IF FIELD CONDITIONS WILL NOT ALLOW FOR SATISFACTORY SAMPLING. ANY ADJUSTMENTS TO SAMPLING LOCATIONS MUST MEET THE INTENDED PURPOSE ORIGINALLY DESIGNATED FOR THAT LOCATION AND MUST BE DOCUMENTED WITH A SWPPP AMENDMENT FORM.

IDENTIFICATION STAMP
DIV. OF THE STATE ARCHITECT
APP: 02-119490 INC:
REVIEWED FOR
SS ☑ FLS ☑ ACS ☑
DATE: 09/13/2022

LPA
ARCHITECTURE ENGINEERING INTERIORS
LANDSCAPE ARCHITECTURE PLANNING

916-287-2400 Office
916-287-2401 Fax
LPADesignStudios.com
431 I Street,
Suite 107
Sacramento, California 95814

REGISTERED PROFESSIONAL ENGINEER
KATHLEEN M. SHINKAI
R.C.E. 68369
EXP. 9-30-23
CIVIL
STATE OF CALIFORNIA

This document and all other project documents, ideas, aesthetics and designs incorporated therein are instruments of service. All project documents are copyright protected, are the property of LPA, Inc. (LPA) and cannot be lawfully used in whole or in part for any project or purpose except as set forth in the contractual agreement between LPA and its Client. The unauthorized disclosure and/or use of the project documents (including the creation of derivative works), may give rise to liability for copyright infringement, unlawful disclosure, use or misappropriation of property rights held by LPA. The unauthorized use of the project documents will give rise to the recovery of monetary losses and damages including attorney fees and costs for which the unauthorized user will be held liable.
Project documents describe the design intent of the work and are not a representation of as-built or existing conditions. LPA is not responsible for any discrepancies between the project documents and the existing conditions.

© LPA, Inc.

DAVIS HIGH SCHOOL
AQUATICS CENTER
315 WEST 14TH ST, DAVIS, CA 95616

Developed for
DAVIS JOINT UNIFIED SCHOOL DISTRICT

Revision	Date

Submittal	Date
50% DD REVIEW	06/15/2021
100% DESIGN DEVELOPMENT	07/26/2021
50% CD REVIEW	10/08/2021
100% CD DSA SUBMITTAL	10/22/2021
DSA SUBMITTAL	03/24/2022

Job Number	19044.13
Date Published	03/24/2022
Checked By	K. SHINKAI
Scale	1" = 10'

EROSION CONTROL PLAN

C6.02

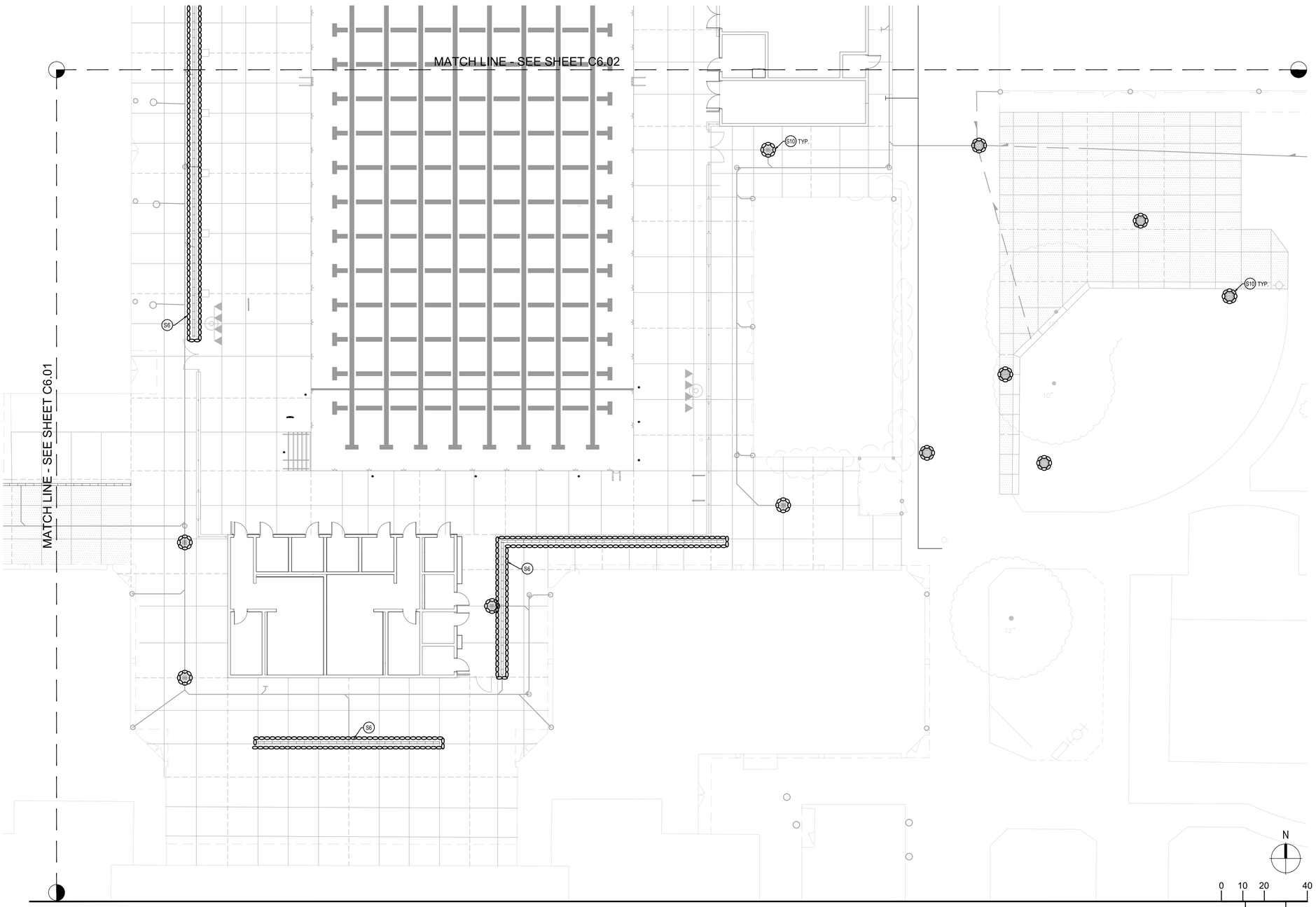

EROSION CONTROL PLAN 1" = 10' 05

EROSION CONTROL NOTES

-SEE SHEET C0.01 FOR EROSION AND SEDIMENT CONTROL NOTES.

-SEE SHEET C0.01 FOR BMP MAINTENANCE NOTES.

-ALL BMPS PER CALIFORNIA STORMWATER QUALITY ASSOCIATION (CASQA)(UNLESS NOTED OTHERWISE) AND ARE AVAILABLE AT www.casqa.org.

-BMPS "NOT" CALLED OUT PER PLAN, ARE SHOWN FOR REFERENCE AS BMP OPTIONS PER QSP (QUALIFIED SWPPP PRACTITIONER) FIELD RECOMMENDATIONS.

-AT THE COMPLETION OF PROJECT, CONTRACTOR SHALL REMOVE ALL CONSTRUCTION BMPS FROM SITE AND DISPOSE IN A LEGAL MANNER.

LEGEND

SYMBOL	DESCRIPTION
	GRAVEL BAGS AND/OR SANDBAGS PER BMP KEYNOTES
	FIBER ROLL
	APPROXIMATE LIMIT OF GRADING
	FLOW DIRECTION

EROSION CONTROL BMPs:

KEY NOTE	DESCRIPTION
E1	EC-1, SCHEDULING
E2	EC-2, PRESERVATION OF EXISTING VEGETATION
E3	EC-3, HYDRAULIC MULCH
E4	EC-4, HYDROSEEDING
E5	EC-5, SOIL BINDERS
E6	EC-6, STRAW MULCH
E7	EC-7, GEOTEXTILES AND MATS
E15	EC-15, SOIL PREPARATION/ROUGHENING

SEDIMENT CONTROL BMPs:

S5	SE-5, FIBER ROLLS
S6	SE-6, GRAVEL BAG BERM
S7	SE-7, STREET SWEEPING AND VACUUMING
S8	SE-8, SANDBAG BARRIER
S10	SE-10, STORM DRAIN INLET PROTECTION

TRACKING CONTROL BMPs:

T1	TC-1, STABILIZED CONSTRUCTION ENTRANCE/EXIT

NON-STORMWATER MANAGEMENT CONTROL BMPs:

N1	NS-1, WATER CONSERVATION PRACTICES
N3	NS-3, PAVING AND GRINDING OPERATIONS
N6	NS-6, ILLICIT CONNECTION/DISCHARGE
N7	NS-7, POTABLE WATER/IRRIGATION
N8	NS-8, VEHICLE AND EQUIPMENT CLEANING
N9	NS-9, VEHICLE AND EQUIPMENT FUELING
N10	NS-10, VEHICLE AND EQUIPMENT MAINTENANCE
N12	NS-12, CONCRETE CURING
N13	NS-13, CONCRETE FINISHING
SC10	SC-10, NON-STORMWATER DISCHARGES

WIND EROSION CONTROL BMPs:

WE	WE-1, WIND EROSION CONTROL

WASTE MANAGEMENT AND MATERIALS POLLUTION CONTROL BMPs:

W1	WM-1, MATERIAL DELIVERY AND STORAGE
W2	WM-2, MATERIAL USE
W3	WM-3, STOCKPILE MANAGEMENT
W4	WM-4, SPILL PREVENTION AND CONTROL
W5	WM-5, SOLID WASTE MANAGEMENT
W6	WM-6, HAZARDOUS WASTE MANAGEMENT
W7	WM-7, CONTAMINATED SOIL MANAGEMENT
W8	WM-8, CONCRETE WASTE MANAGEMENT
W9	WM-9, SANITARY/SEPTIC WASTE MANAGEMENT
W10	WM-10, LIQUID WASTE MANAGEMENT

STORM WATER STORAGE OR CONTAINMENT

W#	STORMWATER TREATMENT DEVICE LOCATION

DISCHARGE LOCATIONS

D#	DISCHARGE LOCATION

SAMPLING LOCATIONS

B#	POLLUTANT SAMPLE LOCATION - BACKGROUND SAMPLE
C#	POLLUTANT SAMPLE LOCATION - CONTRACTORS YARD
S#	POLLUTANT SAMPLE LOCATION - SITE
R#	POLLUTANT SAMPLE LOCATION - RUN-ON

NOTE:
THE SAMPLE LOCATIONS SHOWN ARE THE MINIMUM REQUIREMENT FOR THE PROJECT SITE AND RISK LEVEL X. SAMPLE LOCATIONS MAY BE RELOCATED IF FIELD CONDITIONS WILL NOT ALLOW FOR SATISFACTORY SAMPLING. ANY ADJUSTMENTS TO SAMPLING LOCATIONS MUST MEET THE INTENDED PURPOSE ORIGINALLY DESIGNATED FOR THAT LOCATION AND MUST BE DOCUMENTED WITH A SWPPP AMENDMENT FORM.

IDENTIFICATION STAMP
DIV. OF THE STATE ARCHITECT
APP: 02-119490 INC:
REVIEWED FOR
SS ☑ FLS ☑ ACS ☑
DATE: 09/13/2022

LPA
ARCHITECTURE ENGINEERING INTERIORS
LANDSCAPE ARCHITECTURE PLANNING

916-287-2400 Office
916-287-2401 Fax
LPADesignStudios.com
431 I Street,
Suite 107
Sacramento, California 95814

REGISTERED PROFESSIONAL ENGINEER
KATHLEEN M. SHINKAI
R.C.E. 68369
EXP. 9-30-23
STATE OF CALIFORNIA

This document and all other project documents, ideas, aesthetics and designs incorporated therein are instruments of service. All project documents are copyright protected, are the property of LPA, Inc. (LPA) and cannot be lawfully used in whole or in part for any project or purpose except as set forth in the contractual agreement between LPA and its Client. The unauthorized disclosure and/or use of the project documents (including the creation of derivative works), may give rise to liability for copyright infringement, unlawful disclosure, use or misappropriation of property rights held by LPA. The unauthorized use of the project documents will give rise to the recovery of monetary losses and damages including attorney fees and costs for which the unauthorized user will be held liable.
Project documents describe the design intent of the work and are not a representation of as-built or existing conditions. LPA is not responsible for any discrepancies between the project documents and the existing conditions.

© LPA, Inc.

DAVIS HIGH SCHOOL
AQUATICS CENTER
315 WEST 14TH ST, DAVIS, CA 95616

Developed for
DAVIS JOINT UNIFIED SCHOOL DISTRICT

Revision	Date

Submittal	Date
50% DD REVIEW	06/15/2021
100% DESIGN DEVELOPMENT	07/26/2021
50% CD REVIEW	10/08/2021
100% CD DSA SUBMITTAL	10/22/2021
DSA SUBMITTAL	03/24/2022

Job Number	19044.13
Date Published	03/24/2022
Checked By	K. SHINKAI
Scale	1" = 10'

EROSION CONTROL PLAN

C6.03

EROSION CONTROL NOTES

-SEE SHEET C0.01 FOR EROSION AND SEDIMENT CONTROL NOTES.

-SEE SHEET C0.01 FOR BMP MAINTENANCE NOTES.

-ALL BMPS PER CALIFORNIA STORMWATER QUALITY ASSOCIATION (CASQA)(UNLESS NOTED OTHERWISE) AND ARE AVAILABLE AT www.casqa.org.

-BMPS "NOT" CALLED OUT PER PLAN, ARE SHOWN FOR REFERENCE AS BMP OPTIONS PER QSP (QUALIFIED SWPPP PRACTITIONER) FIELD RECOMMENDATIONS.

-AT THE COMPLETION OF PROJECT, CONTRACTOR SHALL REMOVE ALL CONSTRUCTION BMPS FROM SITE AND DISPOSE IN A LEGAL MANNER.

LEGEND

SYMBOL	DESCRIPTION
	GRAVEL BAGS AND/OR SANDBAGS PER BMP KEYNOTES
	FIBER ROLL
	APPROXIMATE LIMIT OF GRADING
	FLOW DIRECTION

EROSION CONTROL BMPs:

KEY NOTE	DESCRIPTION
E1	EC-1, SCHEDULING
E2	EC-2, PRESERVATION OF EXISTING VEGETATION
E3	EC-3, HYDRAULIC MULCH
E4	EC-4, HYDROSEEDING
E5	EC-5, SOIL BINDERS
E6	EC-6, STRAW MULCH
E7	EC-7, GEOTEXTILES AND MATS
E15	EC-15, SOIL PREPARATION/ROUGHENING

SEDIMENT CONTROL BMPs:

S5	SE-5, FIBER ROLLS
S6	SE-6, GRAVEL BAG BERM
S7	SE-7, STREET SWEEPING AND VACUUMING
S8	SE-8, SANDBAG BARRIER
S10	SE-10, STORM DRAIN INLET PROTECTION

TRACKING CONTROL BMPs:

T1	TC-1, STABILIZED CONSTRUCTION ENTRANCE/EXIT

NON-STORMWATER MANAGEMENT CONTROL BMPs:

N1	NS-1, WATER CONSERVATION PRACTICES
N3	NS-3, PAVING AND GRINDING OPERATIONS
N6	NS-6, ILLICIT CONNECTION/DISCHARGE
N7	NS-7, POTABLE WATER/IRRIGATION
N8	NS-8, VEHICLE AND EQUIPMENT CLEANING
N9	NS-9, VEHICLE AND EQUIPMENT FUELING
N10	NS-10, VEHICLE AND EQUIPMENT MAINTENANCE
N12	NS-12, CONCRETE CURING
N13	NS-13, CONCRETE FINISHING
SC10	SC-10, NON-STORMWATER DISCHARGES

WIND EROSION CONTROL BMPs:

WE	WE-1, WIND EROSION CONTROL

WASTE MANAGEMENT AND MATERIALS POLLUTION CONTROL BMPs:

W1	WM-1, MATERIAL DELIVERY AND STORAGE
W2	WM-2, MATERIAL USE
W3	WM-3, STOCKPILE MANAGEMENT
W4	WM-4, SPILL PREVENTION AND CONTROL
W5	WM-5, SOLID WASTE MANAGEMENT
W6	WM-6, HAZARDOUS WASTE MANAGEMENT
W7	WM-7, CONTAMINATED SOIL MANAGEMENT
W8	WM-8, CONCRETE WASTE MANAGEMENT
W9	WM-9, SANITARY/SEPTIC WASTE MANAGEMENT
W10	WM-10, LIQUID WASTE MANAGEMENT

STORM WATER STORAGE OR CONTAINMENT

W#	STORMWATER TREATMENT DEVICE LOCATION

DISCHARGE LOCATIONS

D#	DISCHARGE LOCATION

SAMPLING LOCATIONS

B#	POLLUTANT SAMPLE LOCATION - BACKGROUND SAMPLE
C#	POLLUTANT SAMPLE LOCATION - CONTRACTORS YARD
S#	POLLUTANT SAMPLE LOCATION - SITE
R#	POLLUTANT SAMPLE LOCATION - RUN-ON

NOTE:
THE SAMPLE LOCATIONS SHOWN ARE THE MINIMUM REQUIREMENT FOR THE PROJECT SITE AND RISK LEVEL X. SAMPLE LOCATIONS MAY BE RELOCATED IF FIELD CONDITIONS WILL NOT ALLOW FOR SATISFACTORY SAMPLING. ANY ADJUSTMENTS TO SAMPLING LOCATIONS MUST MEET THE INTENDED PURPOSE ORIGINALLY DESIGNATED FOR THAT LOCATION AND MUST BE DOCUMENTED WITH A SWPPP AMENDMENT FORM.

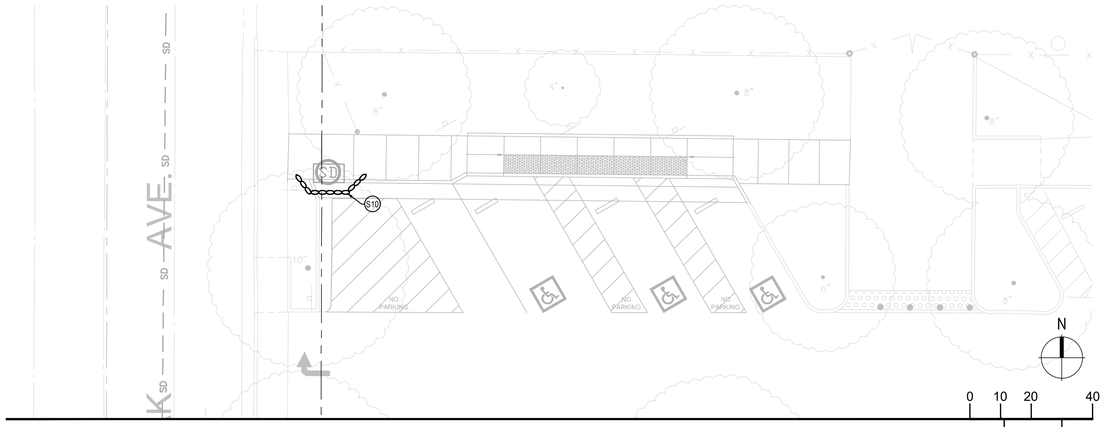

EROSION CONTROL PLAN 1" = 10' 05

IDENTIFICATION STAMP
DIV. OF THE STATE ARCHITECT
APP: 02-119490 INC:
REVIEWED FOR
SS ☑ FLS ☑ ACS ☑
DATE: 09/13/2022

LPA
ARCHITECTURE ENGINEERING INTERIORS
LANDSCAPE ARCHITECTURE PLANNING

916-287-2400 Office
916-287-2401 Fax
LPADesignStudios.com
431 I Street,
Suite 107
Sacramento, California 95814

REGISTERED PROFESSIONAL ENGINEER
KATHLEEN M. SHINKAI
R.C.E. 68369
EXP. 9-30-23
CIVIL
STATE OF CALIFORNIA

This document and all other project documents, ideas, aesthetics and designs incorporated therein are instruments of service. All project documents are copyright protected, are the property of LPA, Inc. (LPA) and cannot be lawfully used in whole or in part for any project or purpose except as set forth in the contractual agreement between LPA and its Client. The unauthorized disclosure and/or use of the project documents (including the creation of derivative works), may give rise to liability for copyright infringement, unlawful disclosure, use or misappropriation of property rights held by LPA. The unauthorized use of the project documents will give rise to the recovery of monetary losses and damages including attorney fees and costs for which the unauthorized user will be held liable.
Project documents describe the design intent of the work and are not a representation of as-built or existing conditions. LPA is not responsible for any discrepancies between the project documents and the existing conditions.

© LPA, Inc.

DAVIS HIGH SCHOOL
AQUATICS CENTER
315 WEST 14TH ST, DAVIS, CA 95616

Developed for
DAVIS JOINT UNIFIED SCHOOL DISTRICT

Revision	Date

Submittal	Date
50% DD REVIEW	06/15/2021
100% DESIGN DEVELOPMENT	07/26/2021
50% CD REVIEW	10/08/2021
100% CD DSA SUBMITTAL	10/22/2021
DSA SUBMITTAL	03/24/2022

Job Number	19044.13
Date Published	03/24/2022
Checked By	K. SHINKAI
Scale	1" = 10'

EROSION CONTROL PLAN

C6.04

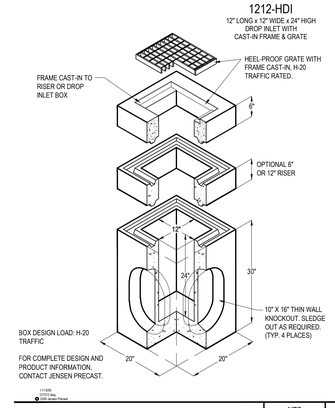

JENSEN PRECAST 12" X 12" DRAIN INLET | NTS | 12

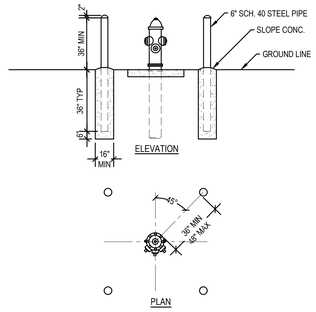

NOTES:
1. TO BE INSTALLED ONLY IN WARRANTED AREA; PARKING LOTS, HEAVY TRAFFIC AREAS ETC.
2. 6" PIPES TO BE POURED FULL OF CONCRETE. TOP OF PIPE FINISHED OFF
3. NO TOP BRACE AT PUMPER OUTLET.
4. HEIGHT OF BOLLARDS NOT TO EXCEED TOP OF HYDRANT BONNET.
5. BOLLARD TO BE PAINTED WITH 2 COASTS ALUMINUM PAINT. PRIMER AND METAL PREPARATION AS SPECIFIED FOR ALUMINUM PAINT.

FIRE HYDRANT PROTECTION | NTS | 08

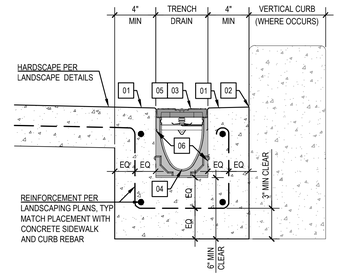

01	CAST IN PLACE CONCRETE AT FINISHED SURFACE SLOPE TO GRATE	05	TRENCH GRATE: "JAMISON" BY URBAN ACCESSORIES, 4.84" WIDTH, 114" OPENINGS, CAST GRAY IRON. GRATE AND TRENCH SLOPE PER PLAN. BOLT TO CONCRETE / CHANNEL PER MANUFACTURER'S REQUIREMENTS.
02	JOINTS PER LANDSCAPING AND ARCHITECTURAL PLANS.		
03	TOP OF GRATE (TG) ELEVATION		
04	INVERT (INV) ELEVATION. SLOPE OF INVERT AS SHOWN ON PLANS	06	TRENCH DRAIN CHANNEL: ACO KS100 KLASSIK DRAIN SYSTEM

TRENCH DRAIN | NTS | 04

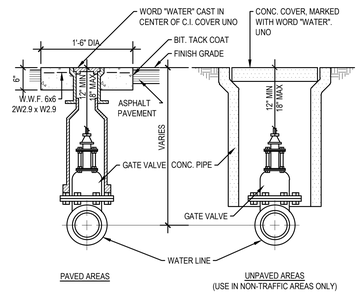

VALVE BOX | NTS | 11

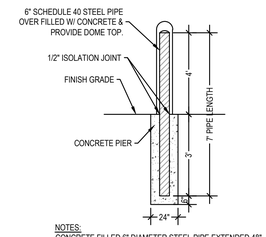

NOTES:
CONCRETE FILLED 6" DIAMETER STEEL PIPE EXTENDED 48" ABOVE AND 36" BELOW GRADE OR SLAB. SHEATH WITH YELLOW BUMPER POST SLEEVE.

DOMED BOLLARD | NTS | 07

1	LARGE CAPACITY AREA DRAIN/ FLOOR DRAIN, ZURN MODEL Z508	5	STORM PIPE AS SHOWN ON PLAN
2	8" CAST IRON GRATE, HEEL-PROOF. TOP OF GRATE (TG) ELEVATION PER PLAN	6	INVERT ELEVATION PER PLAN
3	6" PVC RISER	7	PLUG IF AT END OF RUN
4	WYE FITTING (OR 90-DEGREE ELBOW IF END OF LINE)		

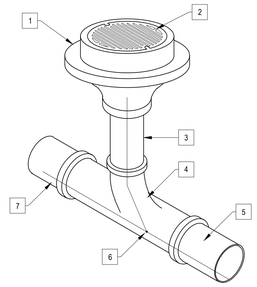

CAST IRON AREA DRAIN | NTS | 14

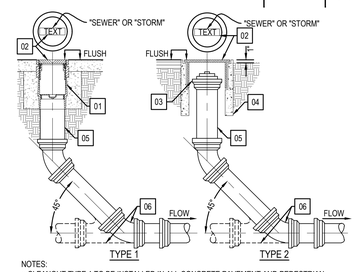

NOTES:
- CLEANOUT TYPE 1 TO BE INSTALLED IN ALL CONCRETE PAVEMENT AND PEDESTRIAN HARDSCAPE AREAS. LID SHALL BE INSTALLED FLUSH WITH FINISHED SURFACE. PROVIDE PCC COLLAR BELOW HARDSCAPE PER MANUFACTURES REQUIREMENTS.
- CLEANOUT TYPE 2 TO BE INSTALLED IN ASPHALT PAVEMENT AND PLANTED AREAS. CLEANOUT RIM TO BE INSTALLED FLUSH WITH FINISHED SURFACE OF AC PAVING OR 1" ABOVE FINISHED GRADE IN PLANTER AREAS AS APPLIES.

01	ZURN ZN-1400-HD-SM OR APPROVED EQUAL	04	BROOKS 1-RT CLEANOUT OR APPROVED EQUAL
02	CLEANOUT LID WITH "SEWER" OR "STORM"	05	PIPE SIZE PER PLAN
03	SOLVENT WELD X F.I.P.T. COUPLING WITH M.I.P.T. PLUG WITH MALE SQUARE NUT.	06	WYE FITTING AT LINE CLEANOUT, 45° ELBOW AT TERMINAL CLEANOUT

CLEANOUT | NTS | 10

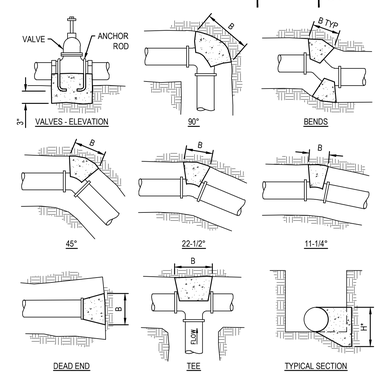

* BLOCK HEIGHT (H) SHOULD BE CHOSEN SO THAT THE CALCULATED BLOCK WIDTH (B) VARIES BETWEEN ONE AND TWO TIMES THE HEIGHT, NFPA A.10.6.1.

NOTES:
1. THRUST BLOCKS SHALL BE USED FOR PLASTIC PIPE 4" DIAMETER OR LARGER.
2. THRUST BLOCK INSTALLATION PER SSPWC SECTION 306 (LATEST EDITION).
3. THRUST BLOCKS SHALL BE PCC, 450-C-2000 PER SSPWC SECTION 201 (LATEST EDITION).
4. ANCHOR RODS SHALL BE GALVANIZED STEEL, 1/2" DIAMETER, WRAPPED AROUND PIPE.
5. ALL VIEWS ARE PLAN VIEWS UNLESS OTHERWISE NOTED.
6. THRUST BLOCK AREAS ARE BASED ON 200 PSI PRESSURE AND 1,500 PSF ALLOWABLE SOIL BEARING PRESSURE. THRUST BLOCK SIZING PER 2019 NFPA 24, ANNEX A, SECTION A.10.6.1.
7. THRUST BLOCKS SHALL BE INSTALLED AT EVERY CHANGE OF DIRECTION.

HORIZONTAL BEND THRUST BLOCK REQUIRED TOTAL BEARING AREA

PIPE SIZE (IN)	11 1/4° BEND	22 1/2° BEND	45° BEND	90° BEND	DEAD END	TEE
	AREA (SF)	AREA (SF)	AREA (SF)	AREA (SF)	AREA (SF)	AREA (SF)
4	0.7	1.4	2.8	5.1	3.6	3.6
6	1.5	2.9	5.7	10.6	7.5	7.5
8	2.5	5.0	9.8	18.2	12.9	12.9
10	3.8	7.6	14.8	27.4	19.4	19.4
12	5.4	10.7	20.9	38.7	27.4	27.4

THRUST BLOCKS FOR PLASTIC PIPE - 1500 PSF SOIL BEARING CAPACITY | NTS | 02

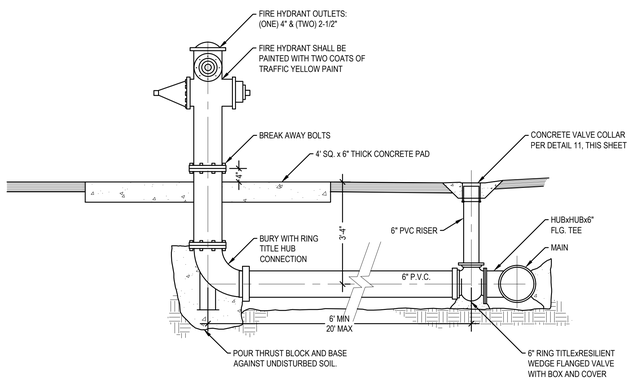

STANDARD FIRE HYDRANT | NTS | 17

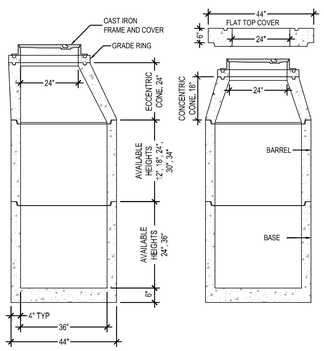

MANHOLE COMPONENTS CONFORM TO CURRENT SPECIFICATIONS, ASTM C-478 AND AASHTO M199. FLAT TOPS AND BASE SLABS ARE DESIGNED FOR AASHTO HS-20 WHEEL LOADING. FOR COMPLETE DESIGN AND PRODUCT INFORMATION CONTACT JENSEN PRECAST OR EQUIVALENT MANUFACTURER.

36" I.D. X 4" WALL SDMH | NTS | 13

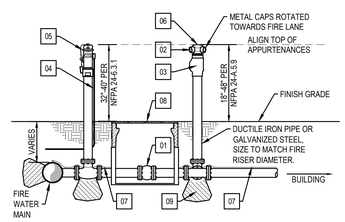

01	SINGLE SWING CHECK VALVE	06	FIRE DEPARTMENT CONNECTION (SHALL BE ROTATED TO FACE FIRE LANE). PROVIDE BUILDING IDENTIFICATION SIGN PER SPECS.
02	AT LEAST TWO 2-1/2" N.S.T. WYE CONNECTION	07	TRACER WIRE REQUIRED WHEN NON-METALLIC PIPE IS USED.
03	CHECK VALVE INSTALLED ABOVE GRADE.	08	REINFORCED CONCRETE UTILITY BOX (CHRISTY B48 OR APPROVED EQUAL)
04	TAMPER SWITCH (ELECTRICAL TO BE EXTENDED TO FIRE CONTROL PANEL IN FUTURE BY OTHERS)	09	THRUST BLOCK (TYP)
05	FLANGED POST INDICATOR VALVE & POST (FM-UL APPR.) LOCKED AND SECURED IN THE OPEN POSITION. PROVIDE BUILDING IDENTIFICATION SIGN PER SPECS.		

NOTE:
ALIGN CENTER OF APPURTENANCES 30" MIN BEHIND CURB AND PARALLEL TO CURB

FIRE DEPARTMENT CONNECTION | NTS | 09

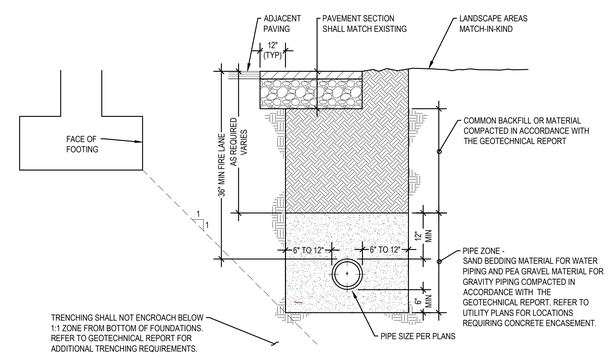

PIPE TRENCH | NTS | 01

IDENTIFICATION STAMP
DIV. OF THE STATE ARCHITECT
APP: 02-119490 INC:
REVIEWED FOR
SS ☑ FLS ☑ ACS ☑
DATE: 09/13/2022

LPA
ARCHITECTURE ENGINEERING INTERIORS
LANDSCAPE ARCHITECTURE PLANNING

916-287-2400 Office
916-287-2401 Fax
LPADesignStudios.com
431 I Street,
Suite 107
Sacramento, California 95814

REGISTERED PROFESSIONAL ENGINEER
KATHLEEN M. SHINKAI
R.C.E. 68369
EXP. 9-30-23
STATE OF CALIFORNIA

This document and all other project documents, ideas, aesthetics and designs incorporated therein are instruments of service. All project documents are copyright protected, are the property of LPA, Inc. (LPA) and cannot be lawfully used in whole or in part for any project or purpose except as set forth in the contractual agreement between LPA and its Client. The unauthorized disclosure and/or use of the project documents (including the creation of derivative works), may give rise to liability for copyright infringement, unlawful disclosure, use or misappropriation of property rights held by LPA. The unauthorized use of the project documents will give rise to the recovery of monetary losses and damages including attorney fees and costs for which the unauthorized user will be held liable.
Project documents describe the design intent of the work and are not a representation of as-built or existing conditions. LPA is not responsible for any discrepancies between the project documents and the existing conditions.

© LPA, Inc.

DAVIS HIGH SCHOOL
AQUATICS CENTER
315 WEST 14TH ST, DAVIS, CA 95616

Developed for
DAVIS JOINT UNIFIED SCHOOL DISTRICT

Revision	Date

Submittal	Date
50% DD REVIEW	06/15/2021
100% DESIGN DEVELOPMENT	07/26/2021
50% CD REVIEW	10/08/2021
100% CD DSA SUBMITTAL	10/22/2021
DSA SUBMITTAL	03/24/2022

Job Number	19044.13
Date Published	03/24/2022
Checked By	K. SHINKAI
Scale	AS SHOWN

CIVIL DETAILS

C7.01

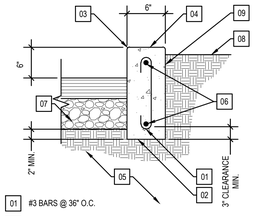

01 #3 BARS @ 36" O.C.
02 CONCRETE CURB
03 1/2" RADIUS, TYP.
04 SLOPE 1/4" PER FOOT
05 COMPACTED SUBGRADE
06 (2) #4 BAR CONTINUOUS
07 PAVEMENT SECTION; REFER TO PAVING PLANS FOR TYPE AND DETAILS.
08 REFER TO LANDSCAPE PLANS FOR PLANTING, WHERE APPLICABLE.
09 WHERE CURB IS PLACED AGAINST VERTICAL SURFACE, INSTALL EXPANSION JOINT MATERIAL PER DETAIL 06 SHEET L5.01.

VERTICAL CURB — NTS — 20

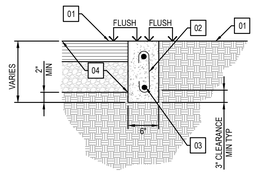

01 FINISHED SURFACE / FINISHED GRADE
02 #3 REBAR @ 36" OC
03 (2) #4 REBAR CONTINUOUS TYP
04 PAVEMENT SECTION PER PLAN

FLUSH CURB — NTS — 16

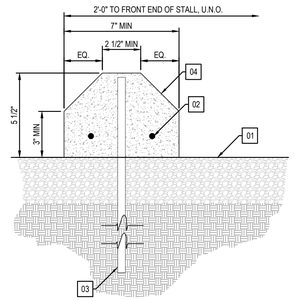

01 FINISHED SURFACE
02 (2) #3 REBAR CONTINUOUS TYP
03 #4 x 18" REBAR AT EACH END
04 PRE-CAST CONC. WHEEL STOP 4'-0" LONG AT SINGLE STALL, 6'-0" LONG AT STALLS SHARED

PRE-CAST CONCRETE WHEEL STOP — NTS — 12

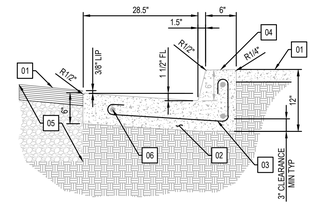

NOTES:
- EXPANSION JOINTS AND CONTROL JOINTS PER SSPWC SECTION 303-5 SHALL BE PLACED IN CURB AND GUTTER ALIGNED WITH HARDSCAPE JOINTING PER LANDSCAPE DRAWINGS (EXCEPTION: CONTROL JOINTS SHALL BE MAXIMUM 10.0' INTERVALS).

01 FINISHED SURFACE
02 CONCRETE CURB AND GUTTER
03 #3 REBAR @ 36" OC
04 SLOPE PER PLAN
05 PAVEMENT SECTION PER PLAN
06 (3) #4 REBAR CONTINUOUS TYP

CURB AND GUTTER - 36 INCH — NTS — 08

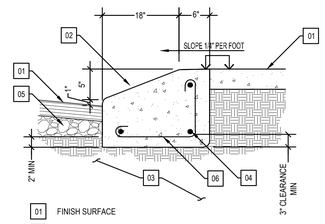

01 FINISH SURFACE
02 ROLLED CURB
03 COMPACTED SUBGRADE
04 (2) #4 BAR CONTINUOUS
05 6" MIN CAB (CRUSHED AGGREGATE BASE)
06 #3 BARS @36 O.C. TYP

24" WEDGE CURB — NTS — 04

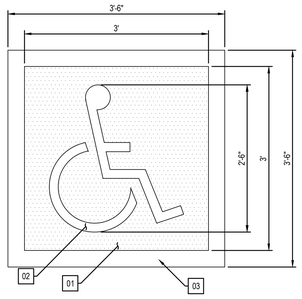

01 BLUE BACKGROUND CONFORMING TO FEDERAL STANDARD 595 COLOR FS 15090
02 2" WIDE WHITE REFLECTORIZED PAINT STRIPING. PER CBC FIGURE 11B-703.7.2.1
03 WHITE REFLECTORIZED PAINT STRIPING

NOTES:
A. STENCIL ONE SYMBOL ONTO PARKING SURFACE IN EACH ACCESSIBLE STALL.
B. LOCATE PER ACCESSIBLE PARKING STALL DETAIL.
C. ALL LINES WHITE ON BLUE BACKGROUND.
D. ALL PAINT THERMOPLASTIC U.N.O.

INTERNATIONAL SYMBOL OF ACCESSIBILITY — NTS — 15

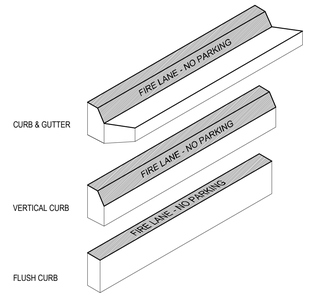

WORDS TO BE STENCILED ON CURB AS SHOWN ABOVE

3" HIGH WHITE PAINTED STENCILED (3/4" STROKE) LETTERS

STENCILING AT EVERY 25 FEET ON CENTER OR PORTION THEREOF

LEGEND
CURBS SHALL BE PAINTED OSHA SAFETY RED

FIRE LANE CURB PAINTING — NTS — 11

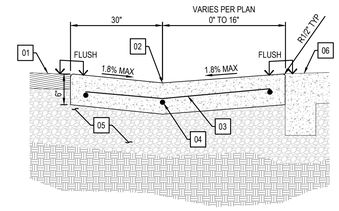

01 ACCESSIBLE STALL FINISHED SURFACE PER PLAN.
02 FLOW LINE PER PLAN. MATCH TO (N) CURB AND GUTTER PER PLAN.
03 #3 REBAR @ 18" OC
04 (3) #3 REBAR CONTINUOUS TYP
05 PAVING SECTION PER PLAN
06 ACCESSIBLE RAMP FINISHED SURFACE PER PLAN. SET CONCRETE EDGES FLUSH AT JOINT.

MODIFIED VALLEY GUTTER — NTS — 07

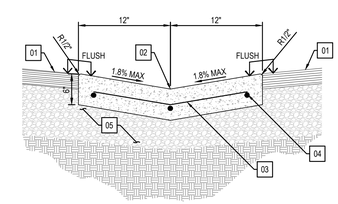

01 FINISHED SURFACE
02 FLOW LINE PER PLAN
03 #3 REBAR @ 18" OC
04 (3) #3 REBAR CONTINUOUS TYP
05 PAVING SECTION PER PLAN

VALLEY GUTTER — NTS — 03

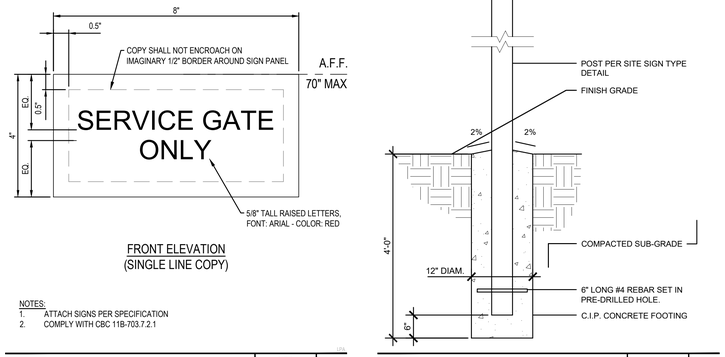

SIGN POST FOOTING — NTS — 14

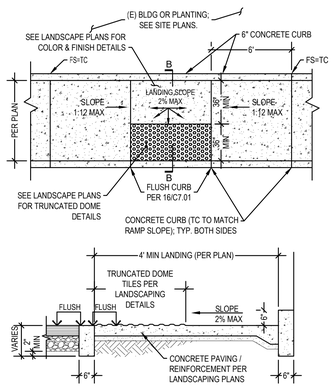

SECTION B

DUAL ACCESSIBLE CURB RAMP — NTS — 10

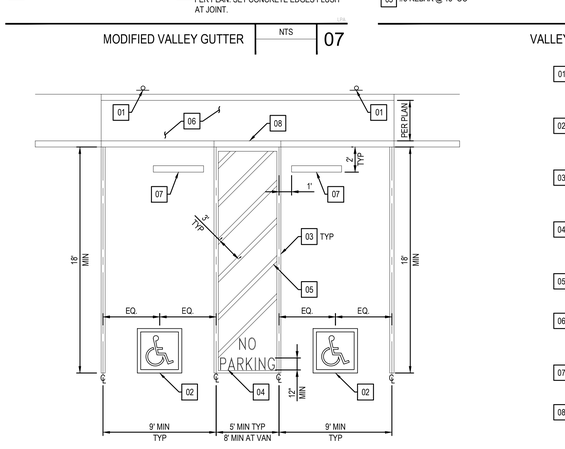

01 (E) ACCESSIBLE PARKING SIGN AND POST. REPLACE OR VERIFY COMPLIANCE PER PLAN. FURNISH NEW IF NOT IN COMPLIANCE.
02 INTERNATIONAL SYMBOL OF ACCESSIBILITY EMBLEM. CENTERED AT END OF PARKING STALL. SEE DETAIL 15 SHEET C7.02.
03 LOADING AND UNLOADING ZONE ACCESS AISLE BORDER PAINTED BLUE (COLOR NO. 15090 PER FEDERAL STD. NO. 595) STRIPING, 4" WIDE
04 WITHIN THE ACCESSIBLE LOADING AISLE PAINT THE WORDS "NO PARKING" IN 12" HIGH LETTERS, WHITE PAINT
05 PAINT 4" WIDE WHITE STRIPE AT 45° ANGLE AT 3' SPACING OC
06 ACCESSIBLE RAMP LANDING AREA (DETAIL 10/C7.02) WITH MODIFIED VALLEY GUTTER (DETAIL 07/C7.02). REFER TO PAVING AND GRADING PLANS FOR LAYOUT. REFER TO SITE PLANS FOR EXTENTS OF PASSENGER LOADING STRIPING EXTENDING INTO CURB /GUTTER AREA.
07 PRE-CAST CONCRETE WHEEL STOP. SEE DETAIL 12 SHEET C7.02.

NOTE: ALL PAINT THERMOPLASTIC U.N.O.

ACCESSIBLE PARKING STALLS - ANGLED — NTS — 01

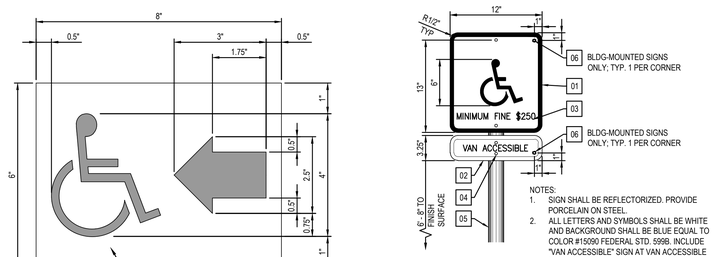

FRONT ELEVATION
(SINGLE LINE COPY)

NOTES:
1. ATTACH SIGNS PER SPECIFICATION
2. COMPLY WITH CBC 11B-703.7.2.1

SERVICE GATE ONLY SIGN — NTS — 18

06 BLDG-MOUNTED SIGNS ONLY; TYP. 1 PER CORNER
01
03
06 BLDG-MOUNTED SIGNS ONLY; TYP. 1 PER CORNER
02
04
05

NOTES:
1. SIGN SHALL BE REFLECTORIZED. PROVIDE PORCELAIN ON STEEL.
2. ALL LETTERS AND SYMBOLS SHALL BE WHITE AND BACKGROUND SHALL BE BLUE EQUAL TO COLOR #15090 FEDERAL STD. 595B. INCLUDE "VAN ACCESSIBLE" SIGN AT VAN ACCESSIBLE PARKING STALL.

01 1/2" WIDE WHITE BORDER TYP
02 PROVIDE THIS SIGN AT VAN ACCESSIBLE STALL ONLY
03 3/4" WHITE LETTERS W/ 1/2" SPACING TYP
04 FOR SIGNAGE MOUNTED ON POSTS: MOUNT SIGNS W/ (2) 5/16" DIA. CARRIAGE BOLTS W/ PEENED THREADS
05 NEW POST INSTALLATION, WHERE REQUIRED: 2" DIAMETER GALVANIZED STEEL STANDARD GAUGE FENCE POST WITH CAP. EMBED INTO CONCRETE SIGN POST FOOTING PER DETAIL 14, SHEET C7.02.
06 FOR SIGNAGE MOUNTED TO (E) BLDGS: 1/4" DIAMETER HILTI KH-EZ SCREWS WITH WASHERS, WITH 2-1/2" EMBEDMENT.

ACCESSIBLE PARKING SIGN — NTS — 13

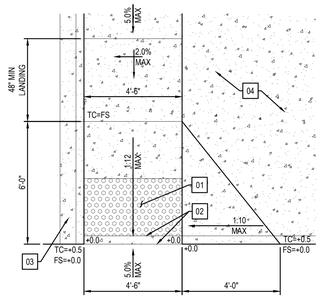

NOTE:
CROSS SLOPE OF RAMP AND LANDING NOT TO EXCEED 2% TYP

01 TRUNCATED DOME TILES PER DETAIL 10 SHEET L5.01.
02 FLUSH CURB. CROSS SLOPE OF FLUSH CURB NOT TO EXCEED 2% MAX
03 CONCRETE WEDGE CURB PER PLAN.
04 CONCRETE PAVING PER PAVING PLAN.

ACCESSIBLE CURB RAMP - FLARED — NTS — 09

1/8" THICK SIGN PANEL
FACE TO BE SHERWIN WILLLIAMS CYBERSPACE, SW7076. SYMBOLS TO BE SHERWIN WILLIAMS PURE WHITE, SW7005.

NOTES:
1. ATTACH SIGNS PER SPECIFICATION
2. COMPLY WITH CBC 11B-703.7.2.1

DIRECTIONAL ISA SIGN — NTS — 17

IDENTIFICATION STAMP
DIV. OF THE STATE ARCHITECT
APP: 02-119490 INC:
REVIEWED FOR
SS ☑ FLS ☑ ACS ☑
DATE: 09/13/2022

LPA
ARCHITECTURE ENGINEERING INTERIORS
LANDSCAPE ARCHITECTURE PLANNING

916-287-2400 Office
916-287-2401 Fax
LPADesignStudios.com
431 I Street,
Suite 107
Sacramento, California 95814

REGISTERED PROFESSIONAL ENGINEER
KATHLEEN M. SHINKAI
R.C.E. 68369
EXP. 9-30-23
STATE OF CALIFORNIA

This document and all other project documents, ideas, aesthetics and designs incorporated therein are instruments of service. All project documents are copyright protected, are the property of LPA, Inc. (LPA) and cannot be lawfully used in whole or in part for any project or purpose except as set forth in the contractual agreement between LPA and its Client. The unauthorized disclosure and/or use of the project documents (including the creation of derivative works), may give rise to liability for copyright infringement, unlawful disclosure, use or misappropriation of property rights held by LPA. The unauthorized use of the project documents will give rise to the recovery of monetary losses and damages including attorney fees and costs for which the unauthorized user will be held liable.
Project documents describe the design intent of the work and are not a representation of as-built or existing conditions. LPA is not responsible for any discrepancies between the project documents and the existing conditions.

© LPA, Inc.

DAVIS HIGH SCHOOL AQUATICS CENTER

315 WEST 14TH ST, DAVIS, CA 95616

Developed for
DAVIS JOINT UNIFIED SCHOOL DISTRICT

Revision	Date

Submittal	Date
50% DD REVIEW	06/15/2021
100% DESIGN DEVELOPMENT	07/26/2021
50% CD REVIEW	10/08/2021
100% CD DSA SUBMITTAL	10/22/2021
DSA SUBMITTAL	03/24/2022

Job Number	19044.13
Date Published	03/24/2022
Checked By	K. SHINKAI
Scale	AS SHOWN

CIVIL DETAILS

C7.02

IDENTIFICATION STAMP
DIV. OF THE STATE ARCHITECT
APP: 02-119490 INC:
REVIEWED FOR
SS ☑ FLS ☑ ACS ☑
DATE: 09/13/2022

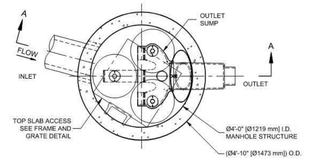

PLAN VIEW
STANDARD OUTLET RISER
FLOWKIT: 40A

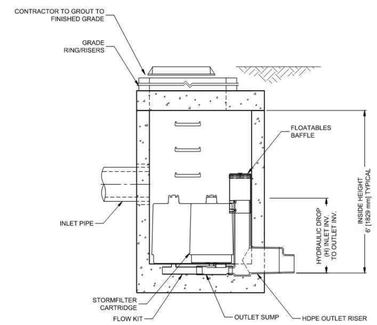

SECTION A-A

STORMFILTER DESIGN NOTES

STORMFILTER TREATMENT CAPACITY IS A FUNCTION OF THE CARTRIDGE SELECTION AND THE NUMBER OF CARTRIDGES. THE STANDARD MANHOLE STYLE IS SHOWN WITH THE MAXIMUM NUMBER OF CARTRIDGES (3). VOLUME SYSTEM IS ALSO AVAILABLE WITH MAXIMUM 3 CARTRIDGES.
Ø4 [1219 mm] MANHOLE STORMFILTER PEAK HYDRAULIC CAPACITY IS 1.0 CFS [28.3 L/s]. IF THE SITE CONDITIONS EXCEED 1.0 CFS [28.3 L/s] AN UPSTREAM BYPASS STRUCTURE IS REQUIRED.

CARTRIDGE SELECTION

CARTRIDGE HEIGHT	27" [686 mm]			18" [458 mm]			LOW DROP		
RECOMMENDED HYDRAULIC DROP (IN)	3.05' [930 mm]			2.3' [700 mm]			1.8' [550 mm]		
SPECIFIC FLOW RATE (gpm/sf) [L/s/m²]	2 [1.30]	1.67* [1.08]	1 [0.65]	2 [1.30]	1.67* [1.08]	1 [0.65]	2 [1.30]	1.67* [1.08]	1 [0.65]
CARTRIDGE FLOW RATE (gpm) [L/s]	22.5 [1.42]	18.79 [1.19]	11.25 [0.71]	15 [0.95]	12.53 [0.79]	7.5 [0.44]	10 [0.63]	8.35 [0.54]	5 [0.32]

* 1.67 gpm/sf [1.08 L/s/m²] SPECIFIC FLOW RATE IS APPROVED WITH PHOSPHOSORB® (PSORB) MEDIA ONLY

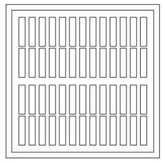

30" [762] SQ. FRAME AND GRATE
(ALSO AVAILABLE IN ROUND)
N.T.S.

SITE SPECIFIC DATA REQUIREMENTS

STRUCTURE ID	*
WATER QUALITY FLOW RATE (cfs) [L/s]	0.04
PEAK FLOW RATE (cfs) [L/s]	0.18
RETURN PERIOD OF PEAK FLOW (yrs)	*
CARTRIDGE HEIGHT (SEE TABLE ABOVE)	18"
NUMBER OF CARTRIDGES REQUIRED	2
CARTRIDGE FLOW RATE	15 GPM
MEDIA TYPE (PERLITE, ZPG, PSORB)	ZPG

PIPE DATA:	I.E.	MATERIAL	DIAMETER
INLET PIPE #1	41.00	PVC	6"
INLET PIPE #2	*	*	*
OUTLET PIPE	38.75	PVC	6"

RIM ELEVATION	44.15

ANTI-FLOTATION BALLAST	WIDTH	HEIGHT
	*	*

NOTES/SPECIAL REQUIREMENTS:

* PER ENGINEER OF RECORD

GENERAL NOTES
1. CONTECH TO PROVIDE ALL MATERIALS UNLESS NOTED OTHERWISE.
2. DIMENSIONS MARKED WITH ( ) ARE REFERENCE DIMENSIONS. ACTUAL DIMENSIONS MAY VARY.
3. FOR SITE SPECIFIC DRAWINGS WITH DETAILED VAULT DIMENSIONS AND WEIGHTS, PLEASE CONTACT YOUR CONTECH ENGINEERED SOLUTIONS LLC REPRESENTATIVE. www.ContechES.com
4. STORMFILTER WATER QUALITY STRUCTURE SHALL BE IN ACCORDANCE WITH ALL DESIGN DATA AND INFORMATION CONTAINED IN THIS DRAWING.
5. STRUCTURE SHALL MEET AASHTO HS-20 LOAD RATING, ASSUMING EARTH COVER OF 0' - 5' [1524 mm] AND GROUNDWATER ELEVATION AT, OR BELOW, THE OUTLET PIPE IN/EIST ELEVATION. ENGINEER OF RECORD TO CONFIRM ACTUAL GROUNDWATER ELEVATION. CASTINGS SHALL MEET AASHTO M306 AND BE CAST WITH THE CONTECH LOGO.
6. FILTER CARTRIDGES SHALL BE MEDIA-FILLED, PASSIVE, SIPHON ACTUATED, RADIAL FLOW, AND SELF CLEANING. RADIAL MEDIA DEPTH SHALL BE 7-INCHES [178 mm]. FILTER MEDIA CONTACT TIME SHALL BE AT LEAST 38 SECONDS.
7. SPECIFIC FLOW RATE IS EQUAL TO THE FILTER TREATMENT CAPACITY (gpm) [L/s] DIVIDED BY THE FILTER CONTACT SURFACE AREA (sq ft)[m²].
8. STORMFILTER STRUCTURE SHALL BE PRECAST CONCRETE CONFORMING TO ASTM C-478 AND AASHTO LOAD FACTOR DESIGN METHOD.

INSTALLATION NOTES
A. ANY SUB-BASE, BACKFILL DEPTH, AND/OR ANTI-FLOTATION PROVISIONS ARE SITE-SPECIFIC DESIGN CONSIDERATIONS AND SHALL BE SPECIFIED BY ENGINEER OF RECORD.
B. CONTRACTOR TO PROVIDE EQUIPMENT WITH SUFFICIENT LIFTING AND REACH CAPACITY TO LIFT AND SET THE STORMFILTER STRUCTURE.
C. CONTRACTOR TO INSTALL JOINT SEALANT BETWEEN ALL STRUCTURE SECTIONS AND ASSEMBLE STRUCTURE.
D. CONTRACTOR TO PROVIDE, INSTALL, AND GROUT INLET PIPE(S).
E. CONTRACTOR TO PROVIDE AND INSTALL CONNECTOR TO THE OUTLET RISER STUB. STORMFILTER EQUIPPED WITH A DUAL DIAMETER HDPE OUTLET STUB AND SAND COLLAR. IF OUTLET PIPE IS LARGER THAN 8 INCHES [200 mm], CONTRACTOR TO REMOVE THE 8 INCH [200 mm] OUTLET STUB AT MOLDED-IN CUT LINE. COUPLING BY FERNCO OR EQUAL AND PROVIDED BY CONTRACTOR.
F. CONTRACTOR TO TAKE APPROPRIATE MEASURES TO PROTECT CARTRIDGES FROM CONSTRUCTION-RELATED EROSION RUNOFF.

The Stormwater Management StormFilter®
www.ContechES.com
THIS PRODUCT MAY BE PROTECTED BY ONE OR MORE OF THE FOLLOWING: US PATENTS: 5,766,446; 5,893,989; 6,027,651; 6,277,267; 6,332,538; 6,439,648; RELATED FOREIGN PATENTS, OR OTHER PATENTS PENDING.

CONTECH ENGINEERED SOLUTIONS LLC
9025 Centre Pointe Dr., Suite 400, West Chester, OH 45069
800-338-1122 513-645-7000 513-645-7993 FAX

SFMH48
STORMFILTER
STANDARD DETAIL

CONTECH STORMFILTER DETAIL | NTS | 03

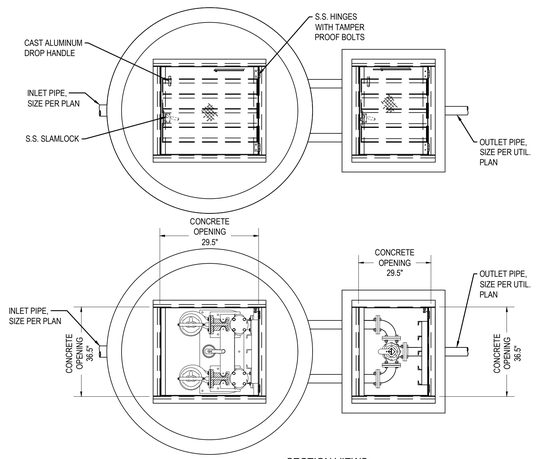

SECTION VIEWS

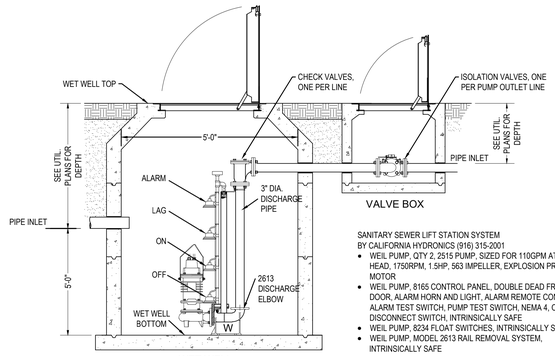

WET WELL

SANITARY SEWER LIFT STATION SYSTEM
BY CALIFORNIA HYDRONICS (916) 315-2001
- WEIL PUMP, QTY 2, 2515 PUMP, SIZED FOR 110GPM AT 20FT HEAD, 1750RPM, 1.5HP, 563 IMPELLER, EXPLOSION PROOF MOTOR
- WEIL PUMP, 8165 CONTROL PANEL, DOUBLE DEAD FRONT DOOR, ALARM HORN AND LIGHT, ALARM REMOTE CONTACT, ALARM TEST SWITCH, PUMP TEST SWITCH, NEMA 4, ON OFF DISCONNECT SWITCH, INTRINSICALLY SAFE
- WEIL PUMP, 8234 FLOAT SWITCHES, INTRINSICALLY SAFE
- WEIL PUMP, MODEL 2613 RAIL REMOVAL SYSTEM, INTRINSICALLY SAFE

SEWER LIFT STATION | NTS | 01

LPA
ARCHITECTURE ENGINEERING INTERIORS
LANDSCAPE ARCHITECTURE PLANNING
916-287-2400 Office
916-287-2401 Fax
LPADesignStudios.com
431 I Street,
Suite 107
Sacramento, California 95814

REGISTERED PROFESSIONAL ENGINEER
KATHLEEN M. SHINKAI
R.C.E. 68369
EXP. 9-30-23
STATE OF CALIFORNIA

This document and all other project documents, ideas, aesthetics and designs incorporated therein are instruments of service. All project documents are copyright protected, are the property of LPA, Inc. (LPA) and cannot be lawfully used in whole or in part for any project or purpose except as set forth in the contractual agreement between LPA and its Client. The unauthorized disclosure and/or use of the project documents (including the creation of derivative works), may give rise to liability for copyright infringement, unlawful disclosure, use or misappropriation of property rights held by LPA. The unauthorized use of the project documents will give rise to the recovery of monetary losses and damages including attorney fees and costs for which the unauthorized user will be held liable.
Project documents describe the design intent of the work and are not a representation of as-built or existing conditions. LPA is not responsible for any discrepancies between the project documents and the existing conditions.
© LPA, Inc.

DAVIS HIGH SCHOOL
AQUATICS CENTER
315 WEST 14TH ST, DAVIS, CA 95616

Developed for
DAVIS JOINT UNIFIED SCHOOL DISTRICT

Revision	Date

Submittal	Date
50% DD REVIEW	06/15/2021
100% DESIGN DEVELOPMENT	07/26/2021
50% CD REVIEW	10/08/2021
100% CD DSA SUBMITTAL	10/22/2021
DSA SUBMITTAL	03/24/2022

Job Number	19044.13
Date Published	03/24/2022
Checked By	K. SHINKAI
Scale	AS SHOWN

CIVIL DETAILS

C7.03

ABBREVIATIONS

&	AND	GA.	GAUGE
∠	ANGLE	GALV.	GALVANIZED
@	AT	GND.	GROUND
℄	CENTERLINE	GR.	GRADE
⌀	DIAMETER OR ROUND	HDR	HEADER
#	POUND OR NUMBER	HT.	HEIGHT
ADJ.	ADJACENT	LT.	LIGHT
AGGR.	AGGREGATE	MAX.	MAXIMUM
AL.	ALUMINUM	MET.	METAL
APPROX.	APPROXIMATE	MFR.	MANUFACTURER
ARCH.	ARCHITECTURAL	MIN.	MINIMUM
A.C.	ASPHALT	MTD.	MOUNTED
ACC.	ACCESSIBLE	MTL.	MATERIAL
B.C.R.	BEGINNING OF CURVE RADIUS	N.I.C.	NOT IN CONTRACT
B.O.C.	BACK OF CURB	N.T.S.	NOT TO SCALE
B.O.W.	BOTTOM OF WALL	O.C.	ON CENTER
B.O.S.	BOTTOM OF SLOPE	O.C.E.W.	ON CENTER EACH WAY
BLDG.	BUILDING	O.D.	OUTSIDE DIAMETER (DIM.)
BLK.	BLOCK	PA	PLANTING AREA
C.E.	CIVIL ENGINEER	PRCST.	PRECAST
C.I.P.	CAST IN PLACE	P.I.P.	POURED IN PLACE
CLKG.	CAULKING	P.O.T.	POINT OF TANGENCY
CMU.	CONCRETE MASONRY UNIT	P.T.D.F.	PRESSURE TREATED DOUGLAS FIR
CONC.	CONCRETE	QTY	QUANTITY
CONSTR.	CONSTRUCTION	R.	RISER
CONT.	CONTINUOUS	RAD.	RADIUS
CTR.	CENTER	REINF.	REINFORCED
D.A.	DISABLED ACCESS	REQ.	REQUIRED
DET.	DETAIL	SCHED.	SCHEDULE
DIA.	DIAMETER	SHT.	SHEET
DIM.	DIMENSION	SPEC.	SPECIFICATION
DN.	DOWN	S.S.	STAINLESS STEEL
DWGS	DRAWINGS	STD.	STANDARD
E.J.	EXPANSION JOINT	STRL.	STRUCTURAL
EL.	ELEVATION	T.	TREAD
ELEC.	ELECTRICAL	T.C.	TOP OF CURB
EQ.	EQUAL	T.O.S.	TOP OF SLOPE
EXP.	EXPANSION	T.O.W.	TOP OF WALL
EXT.	EXTERIOR	TYP.	TYPICAL
F.G.	FINISH GRADE	TBS.	TO BE SELECTED
F.S.	FINISH SURFACE	VEG.	VEGETATION
F.O.W.	FACE OF WALL	VERT.	VERTICAL
F.O.B.	FACE OF BUILDING	W/	WITH
F.O.C.	FACE OF CURB	W/O	WITHOUT

PLANTING NOTES

1. REFER TO CIVIL ENGINEER'S UTILITY AND GRADING PLANS FOR UTILITY LOCATIONS, TREE SUB-DRAINAGE STUBOUTS (IF REQUIRED), AND FINAL GRADING. IF ACTUAL SITE CONDITIONS VARY FROM WHAT IS SHOWN ON THE LANDSCAPE ARCHITECT'S PLANS, THE CONTRACTOR SHALL CONTACT THE OWNER'S REPRESENTATIVE AND LANDSCAPE ARCHITECT FOR DIRECTION AS TO HOW TO PROCEED.
2. VERIFY LOCATIONS OF ALL PERTINENT SITE IMPROVEMENTS INSTALLED AS PART OF OTHER PLANS. IF ANY PART OF THIS PLAN CANNOT BE FOLLOWED DUE TO SITE CONDITIONS CONTACT THE LANDSCAPE ARCHITECT FOR INSTRUCTION PRIOR TO COMMENCING WORK.
3. EXACT LOCATIONS OF PLANT MATERIALS SHALL BE REVIEWED BY THE LANDSCAPE ARCHITECT IN THE FIELD PRIOR TO INSTALLATION. LANDSCAPE ARCHITECT RESERVES THE RIGHT TO ADJUST PLANTS TO EXACT LOCATION IN FIELD.
4. CONTRACTOR SHALL BE RESPONSIBLE FOR VERIFYING ALL PLANT COUNTS AND SQUARE FOOTAGES. QUANTITIES SHOWN ON PLANS TAKE PRECEDENCE OVER WRITTEN QUANTITIES IN "PLANTING LEGEND."
5. PROVIDE MATCHING FORMS AND SIZES FOR ALL PLANT MATERIALS WITHIN EACH SPECIES AND SIZE DESIGNATED ON THE DRAWINGS.
6. PRUNE NEWLY PLANTED TREES ONLY AS DIRECTED BY THE LANDSCAPE ARCHITECT.
7. ALL SHRUBS TO BE ALIGNED AND EQUALLY SPACED IN ALL DIRECTIONS AS DESIGNATED PER THESE NOTES AND DRAWINGS.
8. ALL TREES IN ROWS TO BE ALIGNED.
9. TREES SHALL BEAR SAME RELATION TO FINISH GRADE AS AT PLACE OF GROWTH.
10. FINISH GRADES OF ALL TURF AREAS SHALL BE (1") BELOW ADJACENT CURB OR PAVEMENT. FINISH GRADES OF ALL SHRUB AREAS SHALL BE (1-1/2") BELOW ADJACENT CURB, PAVEMENT, OR HEADER.
11. CONTRACTOR SHALL SUBMIT FOR APPROVAL COLOR PHOTOS OF ALL BOXED TREES, AND A REPRESENTATIVE COLOR PHOTO OF ALL SHRUBS, GROUNDCOVER, AND VINES. TREE PHOTOS SHALL INCLUDE A PERSON FOR SCALE PURPOSES. ALL PLANT MATERIAL SHALL BE OF A QUALITY AS DETERMINED BY THE LANDSCAPE ARCHITECT. MATERIAL FOUND UNSUITABLE FOR THE DESIGN OR SPECIFICATION INTENT WILL BE REJECTED.
12. PROVIDE LANDSCAPE EDGING (HDR) AS DIVIDER BETWEEN ALL TURF AND SHRUB/GROUNDCOVER AREAS IN ADDITION TO AREAS INDICATED ON THE DRAWINGS.
13. PROVIDE A (3") LAYER OF MULCH AT PROPOSED TREE AND SHRUB PLANTING AREAS.
14. INSTALL JUTE MESH ON ALL SLOPES (3:1) OR GREATER. INSTALLATION METHOD PER MANUFACTURER'S RECOMMENDATION.
15. CONTRACTOR SHALL CONDUCT AGRICULTURAL SUITABILITY AND FERTILITY SOILS TESTING PER SOIL PREPARATION SPECIFICATION. ANALYSIS SHALL INCLUDE RECOMMENDATIONS FOR POST MAINTENANCE FERTILIZATION. SUBMIT SOILS ANALYSIS AND SAMPLES OF AMENDMENTS TO LANDSCAPE ARCHITECT FOR REVIEW PRIOR TO SOIL PREPARATION.
16. PROVIDE ROOT BARRIERS IN ADDITION TO THOSE INDICATED ON THE PLANS FOR ALL TREES WITHIN 5' OF ANY HARDSCAPE.
17. PLANT ALL TREES A MINIMUM OF 2' FROM ANY DRAIN LINES. THE LANDSCAPE CONTRACTOR SHALL VERIFY LOCATION OF ALL DRAIN LINES PRIOR TO COMMENCING WORK.
18. TREES ARE TO BE A MINIMUM OF 5' AWAY FROM ANY HARDSCAPE SUCH AS CURBS, WALKS, ETC.
19. LANDSCAPE MAINTENANCE PERIOD IS 90 DAYS.

LAYOUT AND MATERIALS NOTES

1. THE CONTRACTOR SHALL LAYOUT AND FIELD VERIFY ALL DIMENSIONS OF DRIVEWAYS, PLANTERS, WALKS, SLOPES, AND RELATED WORK PRIOR TO CONSTRUCTION. ANY DISCREPANCIES SHALL BE BROUGHT TO THE ATTENTION OF THE OWNER'S AUTHORIZED REPRESENTATIVE.
2. VERIFY LOCATIONS OF ALL SITE IMPROVEMENTS INSTALLED AS PART OF OTHER PLANS. IF ANY PART OF THIS PLAN CANNOT BE FOLLOWED DUE TO SITE CONDITIONS CONTACT THE OWNER'S AUTHORIZED REPRESENTATIVE FOR INSTRUCTIONS PRIOR TO BEGINNING WORK.
3. WRITTEN DIMENSIONS SHALL TAKE PRECEDENCE OVER SCALE.
4. THIS DRAWING INCLUDES THE LOCATIONS OF AREA DRAINS FOR REFERENCE. REFER TO RELATED CIVIL ENGINEERING DRAWINGS FOR CONSTRUCTION DETAILS AND UTILITY CONNECTIONS.
5. REFER TO ELECTRICAL ENGINEERING DRAWINGS FOR LIGHT FIXTURE SCHEDULE AND CIRCUITRY AS NECESSARY.
6. REFER TO SOIL ENGINEER'S GEOTECHNICAL REPORT FOR SUB-BASE MATERIALS AND COMPACTION.
7. WHERE DIMENSIONS ARE CALLED AS "EQUAL," ALL REFERENCED ITEMS SHALL BE SPACED EQUALLY, MEASURED TO THEIR CENTERLINES.
8. ALL MEASUREMENTS ARE TO FACE OF WALL, CURB, OR OTHER FIXED SITE IMPROVEMENT UNLESS OTHERWISE NOTED. DIMENSIONS TO CENTERLINES AS INDICATED.
9. INSTALL ALL INTERSECTING ELEMENTS AT 90 DEGREES TO EACH OTHER UNLESS OTHERWISE NOTED.
10. ALL DRAINS/BASINS SHALL HAVE ATRIUM TYPE GRATES WITHIN SHRUB/GROUNDCOVER AREAS AND FLAT TYPE GRATES WITHIN TURF AREAS.

TREE PRESERVATION GENERAL NOTES

1. TREE PROTECTION TO BE ERECTED AROUND ALL PROTECTED SIZE TREES TO BE AFFECTED BY CONSTRUCTION ACTIVITY.
2. ALL TREES SHALL REMAIN UNLESS NOTED ON THE CITY APPROVED PLANS.
3. NO SITE PREPARATION WORK SHALL BEGIN IN AREAS WHERE TREE PRESERVATION AND PROTECTION MEASURES HAVE NOT BEEN COMPLETED AND APPROVED BY THE LANDSCAPE ARCHITECT.
4. TREE PROTECTION SHALL BE MAINTAINED AND REPAIRED BY THE CONTRACTOR DURING SITE CONSTRUCTION.
5. THE CONTRACTOR SHALL AVOID CUTTING ROOTS LARGER THAN THREE INCHES (3") IN DIAMETER WHEN EXCAVATING NEAR EXISTING TREES. EXCAVATION IN THE VICINITY OF TREES SHALL PROCEED WITH CAUTION. THE CONTRACTOR SHALL CONTACT LANDSCAPE ARCHITECT IF ROOTS LARGER THAN THREE INCHES (3") WITHIN THE FIVE FOOT (5') ROOT PROTECTION ZONE NEED TO BE PRUNED. ALL ROOTS LARGER THAN ONE INCH (1") IN DIAMETER SHALL BE CLEANLY CUT BY HAND WITH BYPASS TYPE PRUNING SHEARS.
6. THE ROOT PROTECTION ZONE IS THAT AREA SURROUNDING A TREE, AS MEASURED BY A RADIUS FROM THE TREE TRUNK, IN WHICH NO EQUIPMENT, VEHICLES OR MATERIALS MAY BE OPERATED OR BE STORED. THE REQUIRED RADIUS LENGTH IS ONE FOOT (1') PER DIAMETER INCH OF THE TREE. FOR EXAMPLE: A TEN INCH (10") DIAMETER TREE WOULD HAVE A TEN FOOT (10') RADIUS ROOT PROTECTION ZONE AROUND THE TREE. ROOTS OR BRANCHES THAT ARE IN CONFLICT WITH THE CONSTRUCTION SHALL BE CUT CLEANLY ACCORDING TO PROPER PRUNING METHODS. ALL OAK WOUNDS SHALL BE PAINTED OVER WITH AN ASPHALTIC TREE WOUND SEALER, WITHIN TWENTY (20) MINUTES TO PREVENT OAK WILT.
7. NO DISTURBANCE SHALL OCCUR CLOSER TO THE TRUNK THAN HALF THE ROOT PROTECTION ZONE AREA.
8. REMOVE TREES OR SHRUBS TO BE CLEARED FROM PROTECTED ROOT ZONE AREAS BY HAND.
9. TREES DAMAGED OR LOST DUE TO CONTRACTOR'S NEGLIGENCE SHALL BE MITIGATED ON A 1:1 BASIS FOR SIGNIFICANT TREES AND 2:1 BASIS FOR HERITAGE SIZED TREES TO SATISFY THE OWNER. FOR EXAMPLE, THE LOSS OF A 30" DIAMETER TREE REQUIRES 90" OF MITIGATION.
10. EXPOSED ROOTS SHALL BE COVERED AT THE END OF EACH DAY USING TECHNIQUES SUCH AS COVERING WITH SOIL, MULCH, OR WET BURLAP.
11. ANY TREE REMOVAL SHALL BE APPROVED BY THE CLIENT PRIOR TO ITS REMOVAL.
12. ALL EXISTING TREES ARE TO BE MAINTAINED IN GOOD HEALTH THROUGHOUT THE DURATION OF CONSTRUCTION. CONTRACTOR IS TO ESTABLISH A DAILY OR AS NEEDED WATERING ROUTINE FOR ALL EXISTING TREES IN THE CONSTRUCTION ZONE.
13. THE PROPOSED FINISHED GRADE WITHIN THE ROOT PROTECTION ZONE OF ANY TREE TO BE PRESERVED SHALL NOT BE RAISED OR LOWERED MORE THAN THREE INCHES (3").
14. WHERE TREE FENCING WILL CONFLICT WITH NECESSARY CONSTRUCTION ACTIVITY THE FENCING SHALL BE ADJUSTED AND A 6" COARSE LAYER OF MULCH SHALL BE INSTALLED AND MAINTAINED OVER TREE ROOT PROTECTION ZONE. INSTALL TREE-ARMOR WHERE FENCING WILL ENCROACH WITHIN FIVE FEET (5') OF EXISTING TREE.
15. ALL TREE PRUNING TO BE CARRIED OUT BY A PROFESSIONAL TREE CARE COMPANY, UNDER THE DIRECT SUPERVISION OF AN ISA CERTIFIED ARBORIST.
16. ALL TREES SHALL BE PROPERLY PRUNED PRIOR TO CONSTRUCTION TO ALLOW EQUIPMENT CLEARANCE PRIOR TO START OF WORK. DAMAGE, REPAIR, OR REQUIRED TREE REPLACEMENT WILL BE THE SOLE RESPONSIBILITY OF THE CONTRACTOR.
17. ALL TREES AND LIMBS ARE TO BE CHIPPED INTO MULCH ONSITE. NO WHOLE LIMBS ARE TO BE HAULED OFF SITE. CONTRACTOR TO TAKE CARE IN CLEANING ALL CHAINSAWS AND PRUNING EQUIPMENT PRIOR TO BEGINNING WORK, AND AT THE COMPLETION OF WORK TO PREVENT THE POSSIBLE SPREAD OF OAK WILT. CONTRACTOR TO CONSULT WITH A LOCAL CERTIFIED ARBORIST DURING TREE TRIMMING AND MULCH GRINDING OPERATIONS FOR PROPER PRUNING TECHNIQUES AND DISPOSAL OF MATERIAL.

LANDSCAPE GRADING AND DRAINAGE

1. REFER TO CIVIL ENGINEER'S GRADING PLANS FOR SITE GRADING, DRAINAGE, AND UTILITY LOCATIONS. IF ACTUAL SITE CONDITIONS VARY FROM WHAT IS SHOWN ON THE LANDSCAPE ARCHITECT'S PLANS, THE CONTRACTOR SHALL CONTACT THE OWNER'S AUTHORIZED REPRESENTATIVE AND LANDSCAPE ARCHITECT FOR DIRECTION AS TO HOW TO PROCEED.
2. REFER TO CIVIL ENGINEER'S DRAWINGS FOR SUB-DRAINAGE POINT OF CONNECTION TO STORM DRAIN.
3. THE CONTRACTOR SHALL REQUEST OBSERVATION AS REQUIRED 48 HOURS IN ADVANCE OF PERFORMING WORK.
4. ALL GRADING OPERATIONS SHALL CONFORM TO APPENDIX J OF THE CALIFORNIA BUILDING CODE.
5. FIELD VERIFY EXISTING UNDERGROUND UTILITIES. THE CONTRACTOR SHALL BE RESPONSIBLE FOR VERIFYING THE ACTUAL LOCATION AND ELEVATION IN THE FIELD PRIOR TO BEGINNING CONSTRUCTION. THE CONTRACTOR SHALL PROTECT ALL EXISTING UTILITIES AND SHALL BE RESPONSIBLE FOR ANY DAMAGE TO EXISTING UTILITIES ENCOUNTERED DURING CONSTRUCTION.
6. NO CHANGE IN CONTRACT PRICE WILL BE ALLOWED FOR ACTUAL OR CLAIMED DISCREPANCIES BETWEEN EXISTING GRADE AND THE GRADES SHOWN ON THE PLANS AFTER THE CONTRACTOR HAS ACCEPTED EXISTING GRADES AND MOVED ONTO THE SITE.
7. ALL PROPOSED GRADES ARE TO MEET AND BLEND IN WITH EXISTING GRADING AT PROJECT LIMIT AND EXISTING SIDEWALK. PRECISE ELEVATIONS INDICATED ON PLANS TO BE VERIFIED IN FIELD TO AS-BUILT CONDITION.
8. THE DEBRIS CREATED BY LANDSCAPE GRADING OPERATIONS SHALL BECOME THE PROPERTY OF THE CONTRACTOR AND SHALL BE LEGALLY DISPOSED OF OFF-SITE.
9. FINAL LANDSCAPE GRADING SHALL BE REVIEWED BY THE LANDSCAPE ARCHITECT IN THE FIELD PRIOR TO INSTALLATION OF PLANTING.

GENERAL NOTES

1. THE CONTRACTOR AND SUB CONTRACTORS SHALL BE RESPONSIBLE FOR REVIEWING, UNDERSTANDING, AND FOLLOWING ALL GENERAL NOTES ON ALL SHEETS. ALL ITEMS STATED IN THE GENERAL NOTES SHOULD BE INCLUDED IN THE CONTRACTOR'S FINAL BID. ANY QUESTIONS REGARDING THE GENERAL NOTES SHOULD BE ADDRESSED BY MEANS OF AN RFI DURING THE BIDDING PHASE. ANY ITEMS THAT ARE NOT ACCOUNTED FOR AFTER THE PROJECT HAS BEEN AWARDED, WILL BE PROVIDED AT NO ADDITIONAL COST TO THE OWNER.
2. BASE INFORMATION INCLUDING THE LOCATION OF PROPERTY LINES, EASEMENTS, BUILDINGS, ROADS, AND CURBS HAVE BEEN TAKEN FROM THE CIVIL ENGINEER'S DRAWINGS. REFER TO CIVIL ENGINEERING DRAWINGS FOR ADDITIONAL INFORMATION.
3. REFER TO CIVIL ENGINEERING DRAWINGS FOR UTILITY INFORMATION INCLUDING STORM DRAIN, SEWER, WATER, ELECTRICAL, GAS, TELEPHONE, AND CABLE TV.
4. REFER TO CITY AND/OR COUNTY STANDARD PLANS AND SPECIFICATIONS WHERE APPLICABLE.
5. VERIFY SITE INFORMATION INCLUDING PROPERTY LINES, TOP AND BOTTOMS OF SLOPES, ROADWAY CURBS AND GUTTERS, UTILITIES, AND OTHER INFORMATION AFFECTING THE SCOPE OF WORK INCLUDED ON THESE DRAWINGS. IF ACTUAL SITE CONDITIONS VARY FROM WHAT IS SHOWN ON THE LANDSCAPE ARCHITECT'S PLANS, THE CONTRACTOR SHALL CONTACT THE OWNER'S AUTHORIZED REPRESENTATIVE AND THE LANDSCAPE ARCHITECT FOR DIRECTION ON HOW TO PROCEED.
6. EXCAVATION IN THE VICINITY OF UTILITIES AND EXISTING MATERIALS SHALL BE UNDERTAKEN WHEN IT IS OBVIOUS. THE CONTRACTOR BEARS FULL RESPONSIBILITY FOR THIS WORK. ANY DAMAGE CAUSED BY ANY PERSON, VEHICLE, EQUIPMENT, OR TOOL RELATED TO THE EXECUTION OF THE CONTRACT SHALL BE REPAIRED IMMEDIATELY AT NO EXPENSE TO THE OWNER.
7. CONTRACTOR SHALL BE RESPONSIBLE FOR ANY COORDINATION REQUIRED TO ACCOMPLISH ALL CONSTRUCTION OPERATIONS. ALL PIPING, CONDUIT, SLEEVES, ETC. SHALL BE SET IN PLACE PRIOR TO INSTALLATION OF CONSTRUCTION ITEMS.
8. CONTRACTOR SHALL BE RESPONSIBLE TO CONSULT WITH THE SITE SUPERINTENDENT, APPROPRIATE AGENCIES, AND PLANS FOR THE LOCATIONS OF ALL UNDERGROUND UTILITIES, PIPES, AND STRUCTURES. CONTRACTOR SHALL TAKE SOLE RESPONSIBILITY FOR ANY COST INCURRED DUE TO DAMAGE OF SAID UTILITIES.
9. CONTRACTOR SHALL NOT WILLFULLY PROCEED WITH CONSTRUCTION AS DESIGNED WHEN IT IS OBVIOUS THAT UNKNOWN OBSTRUCTIONS, AREA DISCREPANCIES, AND/OR GRADE DIFFERENCES EXIST THAT MAY NOT HAVE BEEN KNOWN DURING DESIGN. SUCH CONDITIONS SHALL BE IMMEDIATELY BROUGHT TO THE ATTENTION OF THE OWNER'S AUTHORIZED REPRESENTATIVE. THE CONTRACTOR SHALL ASSUME FULL RESPONSIBILITY FOR ALL NECESSARY REVISIONS DUE TO FAILURE TO GIVE SUCH NOTIFICATIONS.
10. CONTRACTOR IS RESPONSIBLE FOR REPLACEMENT OF ANY EXISTING MATERIALS THAT ARE DAMAGED DURING CONSTRUCTION.
11. PRIOR TO INSTALLATION OF ANY CONSTRUCTION ITEMS FORMS WITH STEEL IN PLACE, AND COMPACTED SUB-GRADE COMPLETE, SHALL BE OBSERVED AND REVIEWED BY THE LANDSCAPE ARCHITECT.
12. ALL WALLS AND WALKS SHOULD HAVE SMOOTH, CONTINUOUS CURVES AS INDICATED ON PLANS.
13. ALL PROPERTY LINES, LOT LINES, AND TOP OF SLOPE LINES SHALL BE VERIFIED PRIOR TO COMMENCING WORK.
14. ALL ELECTRICAL JUNCTION BOXES FOR LIGHTS SHALL BE IN PLANTING AREAS AND THEIR LOCATIONS REVIEWED BY THE LANDSCAPE ARCHITECT. STAKE LOCATIONS PRIOR TO INSTALLATION.
15. SEE CIVIL ENGINEERING DRAWINGS FOR CURBS AND A/C PAVING.
16. REFER TO GRADING PLANS FOR ELEVATIONS AND LOCATION OF DRAINAGE STRUCTURES PRIOR TO INSTALLATION OF WALKS, FOOTINGS, AND OTHER STRUCTURES.
17. THE CONTRACTOR MUST FAMILIARIZE HIMSELF WITH THE IRRIGATION, GRADING AND PLANTING ON ADJACENT PROPERTIES. ANY DAMAGE OR ADJUSTMENTS REQUIRED INCLUDING REPLACING OR RELOCATING IRRIGATION LINES, HEADS, VALVES, WIRES, PLANTING OR ANY UTILITY THAT OCCURS ON ADJACENT PARCELS DUE TO THE GRADING AND CONSTRUCTION OF THIS PROJECT IS THE SOLE RESPONSIBILITY OF THE CONTRACTOR AND SHALL BE PERFORMED AT NO ADDITIONAL COST TO THE OWNER. THE OWNER'S REP. MUST REVIEW ANY REQUIRED MODIFICATIONS TO THESE AREAS PRIOR TO COMMENCING WORK. THE CONTRACTOR MUST NOTIFY THE OWNER'S AUTHORIZED REP. OF THESE CONDITIONS OR ANY DISCREPANCIES PRIOR TO COMMENCING WORK. (TYP. ENTIRE SITE)
18. CONTRACTOR IS TO PROTECT EXISTING LANDSCAPE AND HARDSCAPE IN PLACE EXCEPT WHERE INDICATED AS DEMO PER CIVIL PLANS. ANY EXISTING PLANTING/ IRRIGATION/ OR CONCRETE DAMAGED ON ADJACENT PROPERTY DUE TO CONSTRUCTION OR GRADING MUST BE REPLACED BY THE CONTRACTOR TO THE SATISFACTION OF THE LANDSCAPE ARCHITECT AND OWNER'S REPRESENTATIVE AT NO ADDITIONAL COST TO THE OWNER. TYPICAL ALL ADJACENT PROPERTIES.

SHEET INDEX

LANDSCAPE

L0.01	LANDSCAPE NOTES AND SCHEDULES
L0.02	OVERALL SITE PLAN
L1.01	MATERIALS PLAN
L1.02	MATERIALS PLAN
L1.03	MATERIALS PLAN
L1.04	MATERIALS PLAN
L2.01	LAYOUT PLAN
L2.02	LAYOUT PLAN
L2.03	LAYOUT PLAN
L2.04	LAYOUT PLAN
L4.01	SECTIONS AND ELEVATIONS
L4.02	SECTIONS AND ELEVATIONS
L4.03	SECTIONS AND ELEVATIONS
L4.04	SECTIONS AND ELEVATIONS
L5.01	CONSTRUCTION DETAILS
L5.02	CONSTRUCTION DETAILS
L5.03	CONSTRUCTION DETAILS
L5.04	CONSTRUCTION DETAILS
L5.05	CONSTRUCTION DETAILS
L7.01	PLANTING PLAN
L7.02	PLANTING DETAILS

MANUFACTURER'S LIST

PRODUCT:	CONTACT INFORMATION:
1. ROOT BARRIER	DEEP ROOT 81 LANGTON STREET SUITE 4 SAN FRANCISCO, CA 94010 (800) 458-7668 CONTACT: PETE VOSKES
2. FILTER FABRIC	MIRAFI 22672 LAMBERT STREET SUITE 602 LAKE FOREST, CA (800) 423-9923 CONTACT: JIM OR JOSH
3. TUBULAR STEEL FENCE	AMERISTAR 5678 CONCOURS ST ONTARIO, CA. 91764 (310) 606-9125 CONTACT: SEAN RUSSEL

SITE FURNISHINGS LEGEND

SYM.	DESC.	MANUF.	MODEL #	COLOR	FINISH/PTRN.	QTY.	DTL
	DRINKING FOUNTAIN	HAWS	3612	MATTE SILVER	POWDERCOAT	4	07/ L5.05
	TRASH AND RECYCLING	LANDSCAPE FORMS	CHASE PARK TOP OPENING	SILVER	POWDERCOAT	1 PAIR	PER MANUF
	BIKE LOCKER	COLUMBIA CASCADE PERFORATED CYCLOCKER	2176-2-PR	BLUE	POWDERCOAT	2	PER MANUF
	BIKE RACK	-	-	-	TO MATCH EXISTING	1	PER MANUF

1. ALL SITE FURNISHINGS ARE TO BE PROVIDED BY THE CONTRACTOR.
2. QUANTITIES SHOWN IN SITE FURNISHINGS LEGEND ARE TOTAL QUANTITIES.

LOCATION MAP

N.T.S.

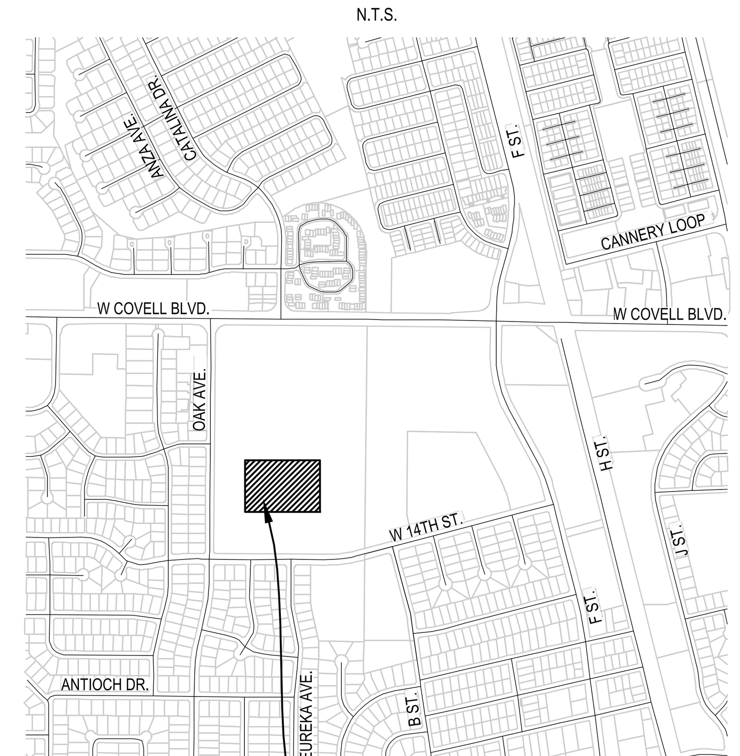

PROPOSED SITE

DAVIS SR. HIGH SCHOOL
315 W 14TH STREET
DAVIS, CA 95616

KEYNOTES

KEY NOTE	DESCRIPTION	DET/ SHT	COLOR / FINISH
01	CONCRETE PAVING - PEDESTRIAN	01/ L5.01	NATURAL GRAY/ MEDIUM BROOM FINISH
02	CONCRETE PAVING - POOL DECK	1/ AQ1.0	NATURAL GRAY/ MEDIUM BROOM FINISH
03	CONCRETE PAVING - VEHICULAR	01/ L5.01	NATURAL GRAY/ MEDIUM BROOM FINISH
04	CONCRETE FREESTANDING WALL	01 L5.05	NATURAL GRAY/ LT. SANDBLAST SIDES, SMOOTH TOP
05	CIP CONC CURB AT FENCING/COLUMN	09/ L5.01	NATURAL GRAY/ SMOOTH FINISH
06	CMU ENCLOSURE WALL	01/ L5.02	LIGHTWEIGHT / GROUND FACE, TO MATCH ARCHITECTURE
07	STEEL ENCLOSURE GATES	02/ L5.02	10% OPEN PERF METAL COLOR: MORNING GLORY SW 6971
08	CHAINLINK FENCE	01/ L5.04	GALVANIZED
09	CHAINLINK DOUBLE PEDESTRIAN GATE	02/ L5.04	GALVANIZED
10	TUBULAR STEEL FENCE	01/ L5.03	AEGIS II BY AMERISTAR COLOR: MORNING GLORY SW 6971
11	TUBULAR STEEL DOUBLE PEDESTRIAN GATE W/ PANIC HARDWARE	02/ L5.03	AEGIS II BY AMERISTAR COLOR: MORNING GLORY SW 6971
12	TUBULAR STEEL SINGLE PEDESTRIAN GATE W/ PANIC HARDWARE	03/ L5.03	AEGIS II BY AMERISTAR COLOR: MORNING GLORY SW 6971
13	TOMBSTONE AT FENCING	13/ L5.05	NATURAL GRAY/ SMOOTH FINISH
14	HOSE BIB AT FENCING	13/ L5.05	NATURAL GRAY/ SMOOTH FINISH
15	TOMBSTONE AT CMU WALL	15/ L5.05	NATURAL GRAY/ SMOOTH FINISH
16	DECK SHOWER	08/ L5.05	3-PERSON COLUMN SHOWER BY BRADLEY
17	SORTING TRASH COLLECTOR		PROVIDED BY OWNER
18	TRUNCATED DOMES	10/ L5.01	WAUSAU TILE ADA-2 12"X12" PAVERS, COLOR A-40 FED YELLOW 33538
19	TRASH AND RECYCLING RECEPTACLE	PER MANUF	PER SITE FURNISHINGS LEGEND SHEET L0.01
20	BIKE LOCKERS		PER SITE FURNISHINGS LEGEND SHEET L0.01
21	BIKE RACK		PER SITE FURNISHINGS LEGEND SHEET L0.01
22	DETECTABLE SIDE RAIL	03/ L5.05	STAINLESS STEEL
23	DRINKING FOUNTAIN	07/ L5.05	PER SITE FURNISHINGS LEGEND SHEET L0.01
24	CONCRETE CURB UNDER LOCKERS	06D/ S6.01	NATURAL GRAY/ MEDIUM BROOM FINISH

REFERENCE KEYNOTES

KEY NOTE	DESCRIPTION	COMMENTS	DET.
A	EXISTING AC PAVING	PROTECT IN PLACE	
B	EXISTING CONC PAVING	PROTECT IN PLACE	
C	EXISTING CONC CURB/GUTTER	PROTECT IN PLACE	
D	EXISTING CONC CURB RAMP	PROTECT IN PLACE	
E	EXISTING CONC DRIVEWAY	PROTECT IN PLACE	
F	EXISTING BUILDING COLUMNS	PROTECT IN PLACE	
G	EXISTING BUILDING OVERHANG	PROTECT IN PLACE	
H	EXISTING TRUNCATED DOMES	PROTECT IN PLACE	
J	EXISTING BOLLARDS	PROTECT IN PLACE	
K	EXISTING SIGNAGE	PROTECT IN PLACE	
L	EXISTING LIGHT FIXTURE	PROTECT IN PLACE	
M	EXISTING LIGHT FIXTURE	TO BE RELOCATED	09/ L5.05
N	EXISTING CHAINLINK FENCING	PROTECT IN PLACE	
P	EXISTING VEHICULAR GATE	PROTECT IN PLACE	
Q	A.C. PAVING	PER CIVIL	
R	CONC CURB/GUTTER	PER CIVIL	
S	CONC WEDGE CURB	PER CIVIL	
T	CONC WHEEL STOP	PER CIVIL	
U	PARKING LOT STRIPING	PER CIVIL	
V	ADA EMBLEM	PER CIVIL	
W	STORMFILTER	PER CIVIL	
X	SHADE CANOPY OVERHANG	PER ARCH	
Y	SHADE CANOPY COLUMN	PER ARCH	
AA	POOL	PER AQUATICS	
BB	POOL STAIRS	PER AQUATICS	
CC	POOL HANDRAIL	PER AQUATICS	
DD	POOL LADDER	PER AQUATICS	
EE	DIVING BOARD	PER AQUATICS	
FF	CHAIR LIFT	PER AQUATICS	
GG	BLEACHERS	PER MANUF	
HH	WALL MOUNTED ADA SIGNAGE	PER CIVIL	
JJ	SURGE TANK	PER AQUATICS	
KK	POOL GUTTER	PER AQUATICS	
LL	SLOT DRAIN	PER AQUATICS	
MM	LIGHTING	PER ELEC	
NN	CURB RAMP	PER CIVIL	
PP	TRENCH DRAIL	PER CIVIL	

SITE SYMBOLS LEGEND

SYM.	DESC.	SYM.	DESC.	DET.
	FIRE HYDRANT		SAWCUT JOINT	02/ L5.01
	CLEANOUT		SAWCUT EXPANSION JOINTS	02/ L5.01
	DRAIN INLET		MATCHLINE	
WM	DOMESTIC WATER METER		PROPERTY LINE/ RIGHT OF WAY	
	IRRIGATION WATER METER		LIMIT OF WORK	
	DOMESTIC BACKFLOW PREVENTOR	T.O.S.	TOP OF SLOPE	
	POST INDICATOR VALVE	B.O.S.	TOE (BOTTOM) OF SLOPE	
	FIRE DEPT. BACKFLOW	FOC	FACE OF CURB	
	DOWN SLOPE DIRECTION OF RAMP	BOC	BACK OF CURB	
	ALIGN	PA	PLANTING AREA	
	DOUBLE DETECTOR CHECK		GATE VALVE	
	VALVE	W	WATER VAULT	
S	SEWER MANHOLE			

NOTE: UTILITIES SHOWN ARE FOR REFERENCE ONLY. SEE CIVIL AND ELEC DWGS FOR DETAILS AND EXACT LOCATIONS. FINAL LOCATIONS TO BE REVIEWED BY LANDSCAPE ARCHITECT.

IDENTIFICATION STAMP
DIV. OF THE STATE ARCHITECT
APP: 02-119490 INC:
REVIEWED FOR
SS ☑ FLS ☑ ACS ☑
DATE: 09/13/2022

LPA
ARCHITECTURE ENGINEERING INTERIORS
LANDSCAPE ARCHITECTURE PLANNING

916-287-2400 Office
916-287-2401 Fax
LPADesignStudios.com

431 I Street, Suite 107
Sacramento, California 95814

LICENSED LANDSCAPE ARCHITECT
JOHN COURTNEY WEBSTER
STATE OF CALIFORNIA

This document and all other project documents, ideas, aesthetics and designs incorporated therein are instruments of service. All project documents are copyright protected, are the property of LPA, Inc. (LPA) and cannot be lawfully used in whole or in part for any project or purpose except as set forth in the contractual agreement between LPA and its Client. The unauthorized disclosure and/or use of the project documents (including the creation of derivative works), may give rise to liability for copyright infringement, unlawful disclosure, use or misappropriation of property rights held by LPA. The unauthorized use of the project documents will give rise to the recovery of monetary losses and damages including attorney fees and costs for which the unauthorized user will be held liable.
Project documents describe the design intent of the work and are not a representation of as-built or existing conditions. LPA is not responsible for any discrepancies between the project documents and the existing conditions.

DAVIS SR HIGH SCHOOL
AQUATICS CENTER
315 W 14TH ST., Davis, CA 95616

Developed for
DAVIS JOINT UNIFIED SCHOOL DISTRICT

Revision	Date

Submittal	Date
50% DD REVIEW	06/15/2021
100% DD SUBMITTAL	07/26/2021
50% CD REVIEW	10/08/2021
100% CD DSA SUBMITTAL	10/22/2021
DSA SUBMITTAL	3/24/2022

Job Number	1904413
Date Published	03/24/2022
Checked By	AW, JC
Scale	

LANDSCAPE NOTES AND SCHEDULES

L0.01

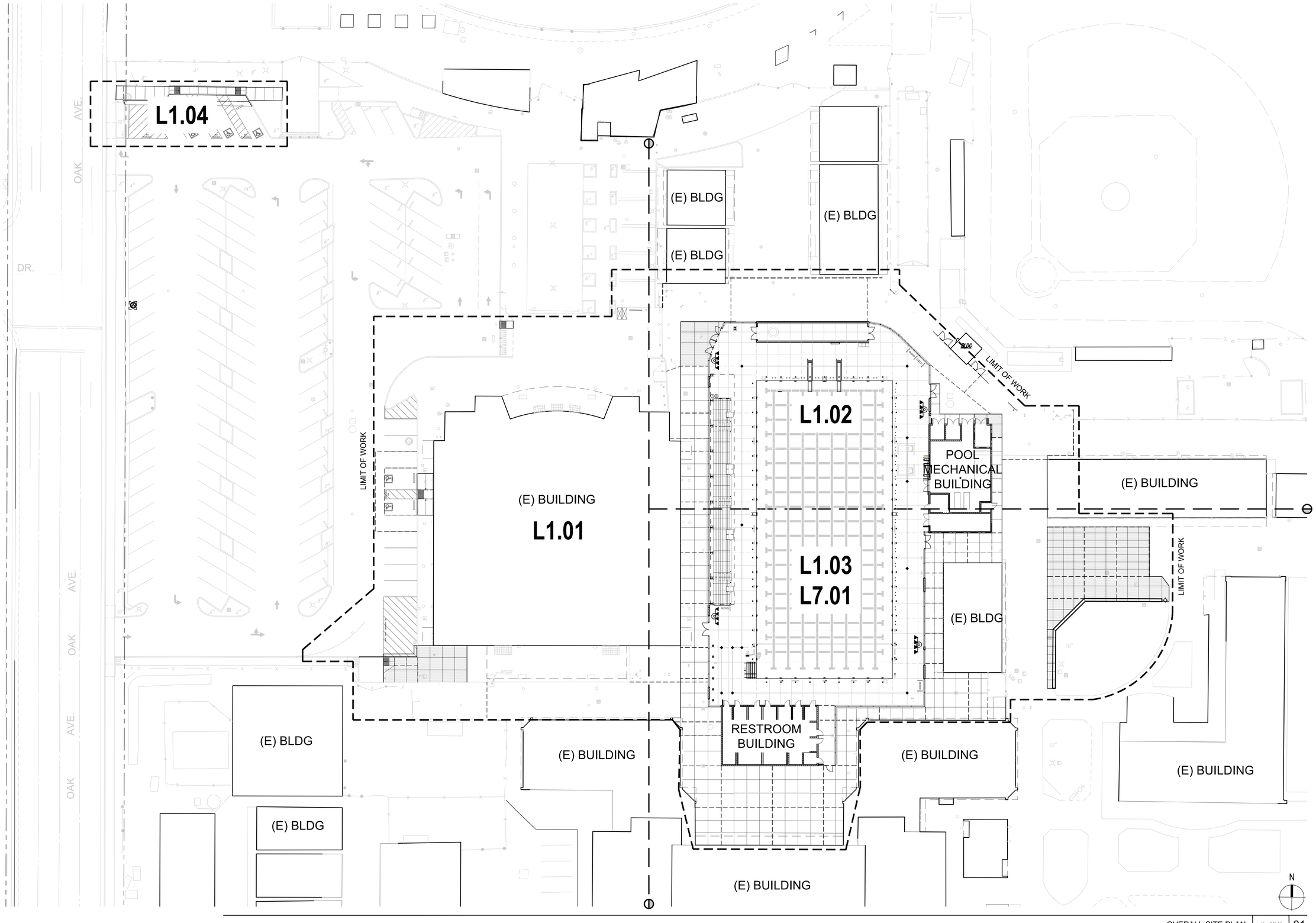

OVERALL SITE PLAN | 1" = 20'-0" | 01

IDENTIFICATION STAMP
DIV. OF THE STATE ARCHITECT
APP: 02-119490 INC:
REVIEWED FOR
SS ☑ FLS ☑ ACS ☑
DATE: 09/13/2022

LPA

ARCHITECTURE ENGINEERING INTERIORS
LANDSCAPE ARCHITECTURE PLANNING

916-287-2400 Office

916-287-2401 Fax

LPADesignStudios.com

431 I Street, Suite 107
Sacramento, California 95814

LICENSED LANDSCAPE ARCHITECT
JOHN CONTANTINO WONG
No. 5011
SIGNATURE
EXPIRATION DATE
12/31/2022
STATE OF CALIFORNIA

This document and all other project documents, ideas, aesthetics and designs incorporated therein are instruments of service. All project documents are copyright protected, are the property of LPA, Inc. (LPA) and cannot be lawfully used in whole or in part for any project or purpose except as set forth in the contractual agreement between LPA and its Client. The unauthorized disclosure and/or use of the project documents (including the creation of derivative works), may give rise to liability for copyright infringement, unlawful disclosure, use or misappropriation of property rights held by LPA. The unauthorized use of the project documents will give rise to the recovery of monetary losses and damages including attorney fees and costs for which the unauthorized user will be held liable.
Project documents describe the design intent of the work and are not a representation of as-built or existing conditions. LPA is not responsible for any discrepancies between the project documents and the existing conditions.

DAVIS SR HIGH SCHOOL
AQUATICS CENTER
315 W 14TH ST., Davis, CA 95616

Developed for
DAVIS JOINT UNIFIED SCHOOL DISTRICT

Revision	Date

Submittal	Date
50% DD REVIEW	06/15/2021
100% DD SUBMITTAL	07/26/2021
50% CD REVIEW	10/08/2021
100% CD DSA SUBMITTAL	10/22/2021
DSA SUBMITTAL	03/24/2022

Job Number	1904413
Date Published	10/22/2021
Checked By	AW, JC
Scale	

OVERALL
SITE PLAN

L0.02

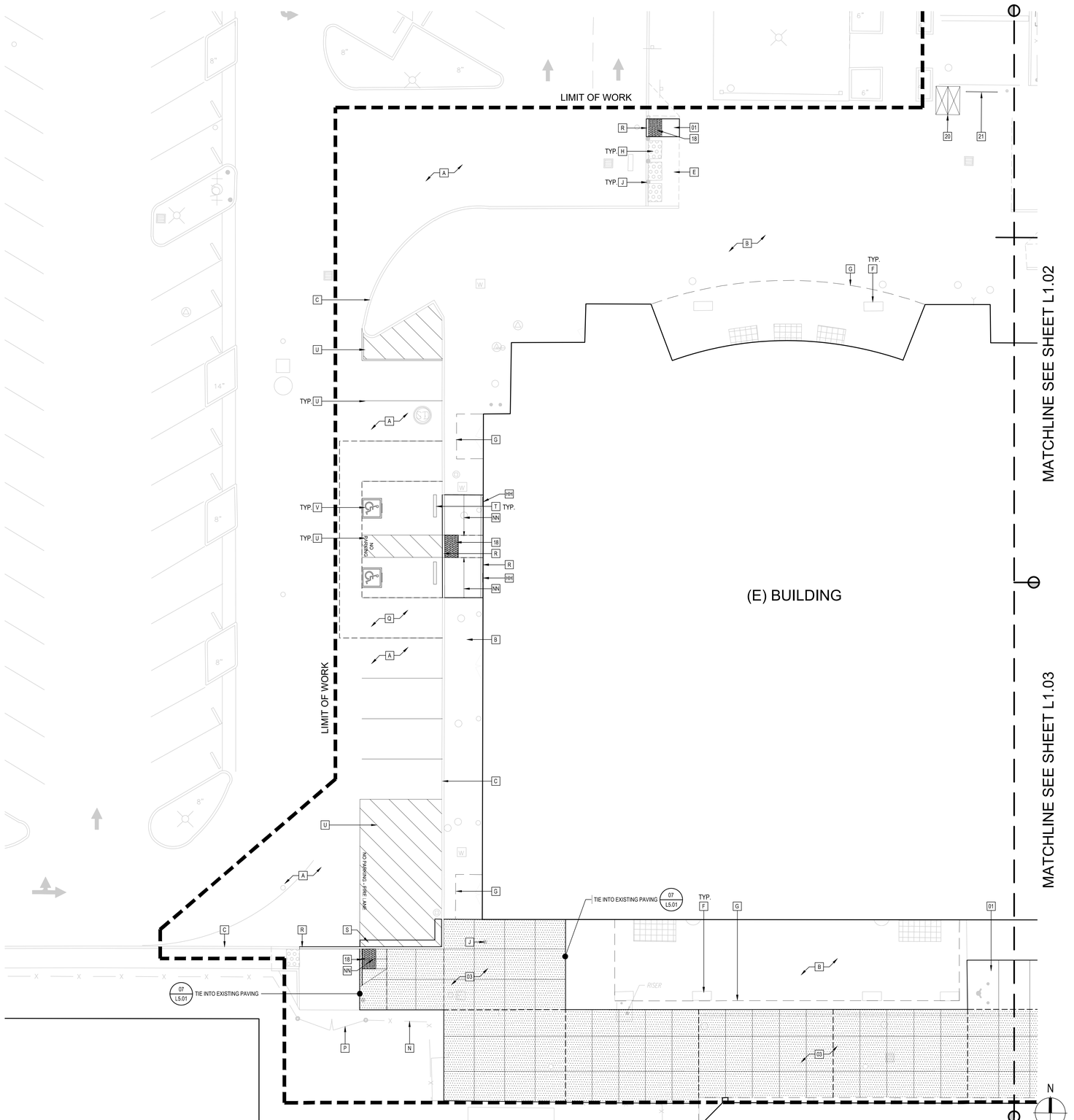

MATERIALS PLAN | 1" = 10'-0" | 05

KEYNOTES

KEY NOTE	DESCRIPTION	DET/ SHT	COLOR / FINISH
01	CONCRETE PAVING - PEDESTRIAN	01/ L5.01	NATURAL GRAY/ MEDIUM BROOM FINISH
02	CONCRETE PAVING - POOL DECK	1/ AQ1.0	NATURAL GRAY/ MEDIUM BROOM FINISH
03	CONCRETE PAVING - VEHICULAR	01/ L5.01	NATURAL GRAY/ MEDIUM BROOM FINISH
04	CONCRETE FREESTANDING WALL	01 L5.05	NATURAL GRAY/ LT. SANDBLAST SIDES, SMOOTH TOP
05	CIP CONC CURB AT FENCING/COLUMN	09/ L5.01	NATURAL GRAY/ SMOOTH FINISH
06	CMU ENCLOSURE WALL	01/ L5.02	LIGHTWEIGHT / GROUND FACE, TO MATCH ARCHITECTURE
07	STEEL ENCLOSURE GATES	02/ L5.02	10% OPEN PERF METAL COLOR: MORNING GLORY SW 6971
08	CHAINLINK FENCE	01/ L5.04	GALVANIZED
09	CHAINLINK DOUBLE PEDESTRIAN GATE	02/ L5.04	GALVANIZED
10	TUBULAR STEEL FENCE	01/ L5.03	AEGIS II BY AMERISTAR COLOR: MORNING GLORY SW 6971
11	TUBULAR STEEL DOUBLE PEDESTRIAN GATE W/ PANIC HARDWARE	02/ L5.03	AEGIS II BY AMERISTAR COLOR: MORNING GLORY SW 6971
12	TUBULAR STEEL SINGLE PEDESTRIAN GATE W/ PANIC HARDWARE	03/ L5.03	AEGIS II BY AMERISTAR COLOR: MORNING GLORY SW 6971
13	TOMBSTONE AT FENCING	13/ L5.05	NATURAL GRAY/ SMOOTH FINISH
14	HOSE BIB AT FENCING	13/ L5.05	NATURAL GRAY/ SMOOTH FINISH
15	TOMBSTONE AT CMU WALL	15/ L5.05	NATURAL GRAY/ SMOOTH FINISH
16	DECK SHOWER	08/ L5.05	3-PERSON COLUMN SHOWER BY BRADLEY
17	SORTING TRASH COLLECTOR		PROVIDED BY OWNER
18	TRUNCATED DOMES	10/ L5.01	WAUSAU TILE ADA-2 12"X12" PAVERS, COLOR A-40 FED YELLOW 33538
19	TRASH AND RECYCLING RECEPTACLE	PER MANUF	PER SITE FURNISHINGS LEGEND SHEET L0.01
20	BIKE LOCKERS		PER SITE FURNISHING LEGEND SHEET L0.01
21	BIKE RACK		PER SITE FURNISHINGS LEGEND SHEET L0.01
22	DETECTABLE SIDE RAIL	03/ L5.05	STAINLESS STEEL
23	DRINKING FOUNTAIN	07/ L5.05	PER SITE FURNISHINGS LEGEND SHEET L0.01
24	CONCRETE CURB UNDER LOCKERS	12/ L5.01	NATURAL GRAY/ MEDIUM BROOM FINISH

REFERENCE KEYNOTES

KEY NOTE	DESCRIPTION	COMMENTS	DET.
A	EXISTING AC PAVING	PROTECT IN PLACE	
B	EXISTING CONC PAVING	PROTECT IN PLACE	
C	EXISTING CONC CURB/GUTTER	PROTECT IN PLACE	
D	EXISTING CONC CURB RAMP	PROTECT IN PLACE	
E	EXISTING CONC DRIVEWAY	PROTECT IN PLACE	
F	EXISTING BUILDING COLUMNS	PROTECT IN PLACE	
G	EXISTING BUILDING OVERHANG	PROTECT IN PLACE	
H	EXISTING TRUNCATED DOMES	PROTECT IN PLACE	
J	EXISTING BOLLARDS	PROTECT IN PLACE	
K	EXISTING SIGNAGE	PROTECT IN PLACE	
L	EXISTING LIGHT FIXTURE	PROTECT IN PLACE	
M	EXISTING LIGHT FIXTURE	TO BE RELOCATED	09/ L5.05
N	EXISTING CHAINLINK FENCING	PROTECT IN PLACE	
P	EXISTING VEHICULAR GATE	PROTECT IN PLACE	
Q	A.C. PAVING	PER CIVIL	
R	CONC CURB/GUTTER	PER CIVIL	
S	CONC WEDGE CURB	PER CIVIL	
T	CONC WHEEL STOP	PER CIVIL	
U	PARKING LOT STRIPING	PER CIVIL	
V	ADA EMBLEM	PER CIVIL	
W	STORMFILTER	PER CIVIL	
X	SHADE CANOPY OVERHANG	PER ARCH	
Y	SHADE CANOPY COLUMN	PER ARCH	
AA	POOL	PER AQUATICS	
BB	POOL STAIRS	PER AQUATICS	
CC	POOL HANDRAIL	PER AQUATICS	
DD	POOL LADDER	PER AQUATICS	
EE	DIVING BOARD	PER AQUATICS	
FF	CHAIR LIFT	PER AQUATICS	
GG	BLEACHERS	PER MANUF	
HH	WALL MOUNTED ADA SIGNAGE	PER CIVIL	
JJ	SURGE TANK	PER AQUATICS	
KK	POOL GUTTER	PER AQUATICS	
LL	SLOT DRAIN	PER AQUATICS	
MM	LIGHTING	PER ELEC	
NN	CURB RAMP	PER CIVIL	
PP	TRENCH DRAIL	PER CIVIL	

SITE SYMBOLS LEGEND

SYM.	DESC.	SYM.	DESC.	DET.
	FIRE HYDRANT		SAWCUT JOINT	02/ L5.01
CO	CLEANOUT		SAWCUT EXPANSION JOINTS	02/ L5.01
	DRAIN INLET		MATCHLINE	
WM	DOMESTIC WATER METER		PROPERTY LINE/ RIGHT OF WAY	
	IRRIGATION WATER METER		LIMIT OF WORK	
	DOMESTIC BACKFLOW PREVENTOR	T.O.S.	TOP OF SLOPE	
	POST INDICATOR VALVE	B.O.S.	TOE (BOTTOM) OF SLOPE	
	FIRE DEPT. BACKFLOW	FOC	FACE OF CURB	
	DOWN SLOPE DIRECTION OF RAMP	BOC	BACK OF CURB	
	ALIGN	PA	PLANTING AREA	
	DOUBLE DETECTOR CHECK		GATE VALVE	
	VALVE	W	WATER VAULT	
S	SEWER MANHOLE			

NOTE: UTILITIES SHOWN ARE FOR REFERENCE ONLY. SEE CIVIL AND ELEC DWGS FOR DETAILS AND EXACT LOCATIONS. FINAL LOCATIONS TO BE REVIEWED BY LANDSCAPE ARCHITECT.

IDENTIFICATION STAMP
DIV. OF THE STATE ARCHITECT
APP: 02-119490 INC:
REVIEWED FOR
SS ☑ FLS ☑ ACS ☑
DATE: 09/13/2022

LPA
ARCHITECTURE ENGINEERING INTERIORS
LANDSCAPE ARCHITECTURE PLANNING
916-287-2400 Office
916-287-2401 Fax
LPADesignStudios.com
431 I Street, Suite 107
Sacramento, California 95814

LICENSED LANDSCAPE ARCHITECT
JOHN CURTIS CLARK
No. 4010
SIGNATURE
07/22/2022
DATE
07/31/2022
REGISTRATION EXPIRES
STATE OF CALIFORNIA

This document and all other project documents, ideas, aesthetics and designs incorporated therein are instruments of service. All project documents are copyright protected, are the property of LPA, Inc. (LPA) and cannot be lawfully used in whole or in part for any project or purpose except as set forth in the contractual agreement between LPA and its Client. The unauthorized disclosure and/or use of the project documents (including the creation of derivative works), may give rise to liability for copyright infringement, unlawful disclosure, use or misappropriation of property rights held by LPA. The unauthorized use of the project documents will give rise to the recovery of monetary losses and damages including attorney fees and costs for which the unauthorized user will be held liable.
Project documents describe the design intent of the work and are not a representation of as-built or existing conditions. LPA is not responsible for any discrepancies between the project documents and the existing conditions.

DAVIS SR HIGH SCHOOL AQUATICS CENTER

315 W 14TH ST., Davis, CA 95616

Developed for
DAVIS JOINT UNIFIED SCHOOL DISTRICT

Revision	Date

Submittal	Date
50% DD REVIEW	06/15/2021
100% DD SUBMITTAL	07/26/2021
50% CD REVIEW	10/08/2021
100% CD DSA SUBMITTAL	10/22/2021
DSA SUBMITTAL	3/24/2022

Job Number	1904413
Date Published	03/24/2022
Checked By	AW, JC
Scale	

MATERIALS PLAN

L1.01

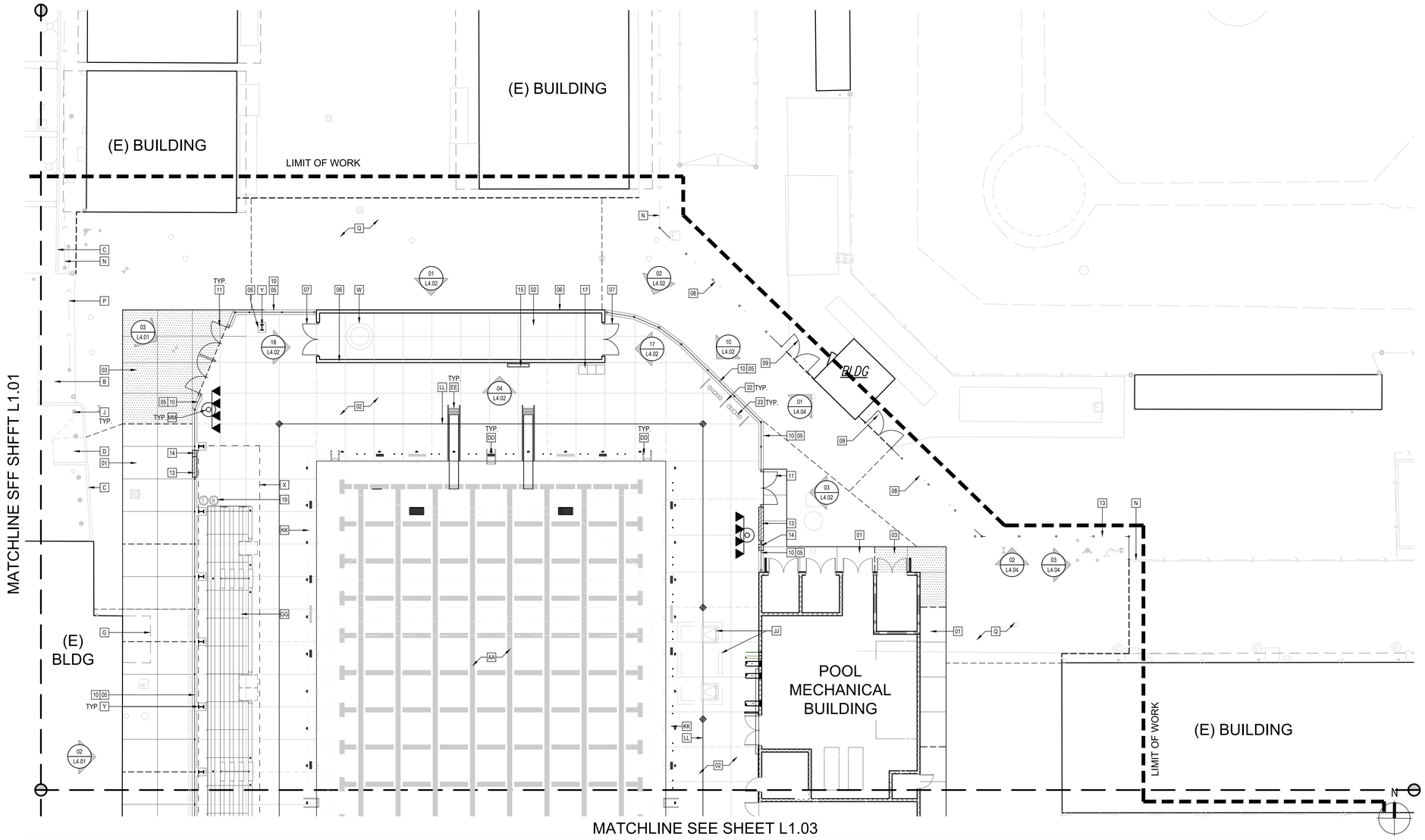

KEYNOTES

KEY NOTE	DESCRIPTION	DET/ SHT	COLOR / FINISH
01	CONCRETE PAVING - PEDESTRIAN	01/ L5.01	NATURAL GRAY/ MEDIUM BROOM FINISH
02	CONCRETE PAVING - POOL DECK	1/ AQ1.0	NATURAL GRAY/ MEDIUM BROOM FINISH
03	CONCRETE PAVING - VEHICULAR	01/ L5.01	NATURAL GRAY/ MEDIUM BROOM FINISH
04	CONCRETE FREESTANDING WALL	01 L5.05	NATURAL GRAY/ LT. SANDBLAST SIDES, SMOOTH TOP
05	CIP CONC CURB AT FENCING/COLUMN	09/ L5.01	NATURAL GRAY/ SMOOTH FINISH
06	CMU ENCLOSURE WALL	01/ L5.02	LIGHTWEIGHT / GROUND FACE, TO MATCH ARCHITECTURE
07	STEEL ENCLOSURE GATES	02/ L5.02	10% OPEN PERF METAL COLOR: MORNING GLORY SW 6971
08	CHAINLINK FENCE	01/ L5.04	GALVANIZED
09	CHAINLINK DOUBLE PEDESTRIAN GATE	02/ L5.04	GALVANIZED
10	TUBULAR STEEL FENCE	01/ L5.03	AEGIS II BY AMERISTAR COLOR: MORNING GLORY SW 6971
11	TUBULAR STEEL DOUBLE PEDESTRIAN GATE W/ PANIC HARDWARE	02/ L5.03	AEGIS II BY AMERISTAR COLOR: MORNING GLORY SW 6971
12	TUBULAR STEEL SINGLE PEDESTRIAN GATE W/ PANIC HARDWARE	03/ L5.03	AEGIS II BY AMERISTAR COLOR: MORNING GLORY SW 6971
13	TOMBSTONE AT FENCING	13/ L5.05	NATURAL GRAY/ SMOOTH FINISH
14	HOSE BIB AT FENCING	13/ L5.05	NATURAL GRAY/ SMOOTH FINISH
15	TOMBSTONE AT CMU WALL	15/ L5.05	NATURAL GRAY/ SMOOTH FINISH
16	DECK SHOWER	08/ L5.05	3-PERSON COLUMN SHOWER BY BRADLEY
17	SORTING TRASH COLLECTOR		PROVIDED BY OWNER
18	TRUNCATED DOMES	10/ L5.01	WAUSAU TILE ADA-2 12"X12" PAVERS, COLOR A-40 FED YELLOW 33538
19	TRASH AND RECYCLING RECEPTACLE	PER MANUF	PER SITE FURNISHINGS LEGEND SHEET L0.01
20	BIKE LOCKERS		PER SITE FURNISHING LEGEND SHEET L0.01
21	BIKE RACK		PER SITE FURNISHINGS LEGEND SHEET L0.01
22	DETECTABLE SIDE RAIL	03/ L5.05	STAINLESS STEEL
23	DRINKING FOUNTAIN	07/ L5.05	PER SITE FURNISHINGS LEGEND SHEET L0.01
24	CONCRETE CURB UNDER LOCKERS	12/ L5.01	NATURAL GRAY/ MEDIUM BROOM FINISH

REFERENCE KEYNOTES

KEY NOTE	DESCRIPTION	COMMENTS	DET.
A	EXISTING AC PAVING	PROTECT IN PLACE	
B	EXISTING CONC PAVING	PROTECT IN PLACE	
C	EXISTING CONC CURB/GUTTER	PROTECT IN PLACE	
D	EXISTING CONC CURB RAMP	PROTECT IN PLACE	
E	EXISTING CONC DRIVEWAY	PROTECT IN PLACE	
F	EXISTING BUILDING COLUMNS	PROTECT IN PLACE	
G	EXISTING BUILDING OVERHANG	PROTECT IN PLACE	
H	EXISTING TRUNCATED DOMES	PROTECT IN PLACE	
J	EXISTING BOLLARDS	PROTECT IN PLACE	
K	EXISTING SIGNAGE	PROTECT IN PLACE	
L	EXISTING LIGHT FIXTURE	PROTECT IN PLACE	
M	EXISTING LIGHT FIXTURE	TO BE RELOCATED	09/ L5.05
N	EXISTING CHAINLINK FENCING	PROTECT IN PLACE	
P	EXISTING VEHICULAR GATE	PROTECT IN PLACE	
Q	A.C. PAVING	PER CIVIL	
R	CONC CURB/GUTTER	PER CIVIL	
S	CONC WEDGE CURB	PER CIVIL	
T	CONC WHEEL STOP	PER CIVIL	
U	PARKING LOT STRIPING	PER CIVIL	
V	ADA EMBLEM	PER CIVIL	
W	STORMFILTER	PER CIVIL	
X	SHADE CANOPY OVERHANG	PER ARCH	
Y	SHADE CANOPY COLUMN	PER ARCH	
AA	POOL	PER AQUATICS	
BB	POOL STAIRS	PER AQUATICS	
CC	POOL HANDRAIL	PER AQUATICS	
DD	POOL LADDER	PER AQUATICS	
EE	DIVING BOARD	PER AQUATICS	
FF	CHAIR LIFT	PER AQUATICS	
GG	BLEACHERS	PER MANUF	
HH	WALL MOUNTED ADA SIGNAGE	PER CIVIL	
JJ	SURGE TANK	PER AQUATICS	
KK	POOL GUTTER	PER AQUATICS	
LL	SLOT DRAIN	PER AQUATICS	
MM	LIGHTING	PER ELEC	
NN	CURB RAMP	PER CIVIL	
PP	TRENCH DRAIL	PER CIVIL	

SITE SYMBOLS LEGEND

SYM.	DESC.	SYM.	DESC.	DET.
	FIRE HYDRANT		SAWCUT JOINT	02/ L5.01
CO	CLEANOUT		SAWCUT EXPANSION JOINTS	02/ L5.01
	DRAIN INLET		MATCHLINE	
WM	DOMESTIC WATER METER		PROPERTY LINE/ RIGHT OF WAY	
	IRRIGATION WATER METER		LIMIT OF WORK	
	DOMESTIC BACKFLOW PREVENTOR	T.O.S.	TOP OF SLOPE	
	POST INDICATOR VALVE	B.O.S.	TOE (BOTTOM) OF SLOPE	
	FIRE DEPT. BACKFLOW	FOC	FACE OF CURB	
	DOWN SLOPE DIRECTION OF RAMP	BOC	BACK OF CURB	
	ALIGN	PA	PLANTING AREA	
	DOUBLE DETECTOR CHECK		GATE VALVE	
	VALVE	W	WATER VAULT	
S	SEWER MANHOLE			

NOTE: UTILITIES SHOWN ARE FOR REFERENCE ONLY. SEE CIVIL AND ELEC DWGS FOR DETAILS AND EXACT LOCATIONS. FINAL LOCATIONS TO BE REVIEWED BY LANDSCAPE ARCHITECT.

MATERIALS PLAN | 1" = 10'-0" | 05

IDENTIFICATION STAMP
DIV. OF THE STATE ARCHITECT
APP: 02-119490 INC:
REVIEWED FOR
SS ☑ FLS ☑ ACS ☑
DATE: 09/13/2022

LPA
ARCHITECTURE ENGINEERING INTERIORS
LANDSCAPE ARCHITECTURE PLANNING

916-287-2400 Office
916-287-2401 Fax
LPADesignStudios.com
431 I Street, Suite 107
Sacramento, California 95814

This document and all other project documents, ideas, aesthetics and designs incorporated therein are instruments of service. All project documents are copyright protected, are the property of LPA, Inc. (LPA) and cannot be lawfully used in whole or in part for any project or purpose except as set forth in the contractual agreement between LPA and its Client. The unauthorized disclosure and/or use of the project documents (including the creation of derivative works), may give rise to liability for copyright infringement, unlawful disclosure, use or misappropriation of property rights held by LPA. The unauthorized use of the project documents will give rise to the recovery of monetary losses and damages including attorney fees and costs for which the unauthorized user will be held liable.
Project documents describe the design intent of the work and are not a representation of as-built or existing conditions. LPA is not responsible for any discrepancies between the project documents and the existing conditions.

DAVIS SR HIGH SCHOOL AQUATICS CENTER
315 W 14TH ST., Davis, CA 95616

Developed for
DAVIS JOINT UNIFIED SCHOOL DISTRICT

Revision	Date

Submittal	Date
50% DD REVIEW	06/15/2021
100% DD SUBMITTAL	07/26/2021
50% CD REVIEW	10/08/2021
100% CD DSA SUBMITTAL	10/22/2021
DSA SUBMITTAL	03/24/2022

Job Number	1904413
Date Published	10/22/2021
Checked By	AW, JC
Scale	

MATERIALS PLAN

L1.02

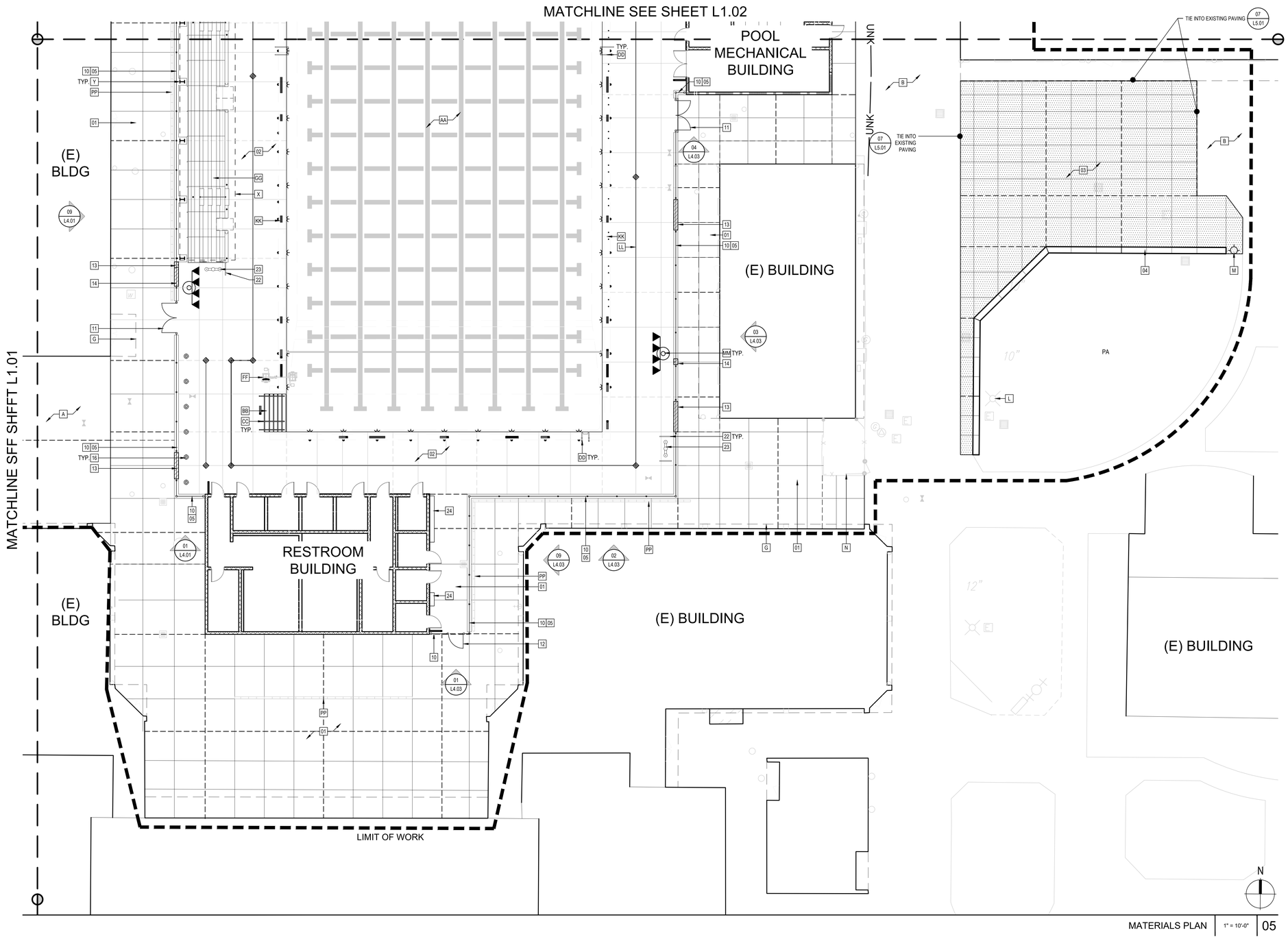

MATERIALS PLAN | 1" = 10'-0" | 05

KEYNOTES

KEY NOTE	DESCRIPTION	DET/ SHT	COLOR / FINISH
01	CONCRETE PAVING - PEDESTRIAN	01/ L5.01	NATURAL GRAY/ MEDIUM BROOM FINISH
02	CONCRETE PAVING - POOL DECK	1/ AQ1.0	NATURAL GRAY/ MEDIUM BROOM FINISH
03	CONCRETE PAVING - VEHICULAR	01/ L5.01	NATURAL GRAY/ MEDIUM BROOM FINISH
04	CONCRETE FREESTANDING WALL	01 L5.05	NATURAL GRAY/ LT. SANDBLAST SIDES, SMOOTH TOP
05	CIP CONC CURB AT FENCING/COLUMN	09/ L5.01	NATURAL GRAY/ SMOOTH FINISH
06	CMU ENCLOSURE WALL	01/ L5.02	LIGHTWEIGHT / GROUND FACE, TO MATCH ARCHITECTURE
07	STEEL ENCLOSURE GATES	02/ L5.02	10% OPEN PERF METAL COLOR: MORNING GLORY SW 6971
08	CHAINLINK FENCE	01/ L5.04	GALVANIZED
09	CHAINLINK DOUBLE PEDESTRIAN GATE	02/ L5.04	GALVANIZED
10	TUBULAR STEEL FENCE	01/ L5.03	AEGIS II BY AMERISTAR COLOR: MORNING GLORY SW 6971
11	TUBULAR STEEL DOUBLE PEDESTRIAN GATE W/ PANIC HARDWARE	02/ L5.03	AEGIS II BY AMERISTAR COLOR: MORNING GLORY SW 6971
12	TUBULAR STEEL SINGLE PEDESTRIAN GATE W/ PANIC HARDWARE	03/ L5.03	AEGIS II BY AMERISTAR COLOR: MORNING GLORY SW 6971
13	TOMBSTONE AT FENCING	13/ L5.05	NATURAL GRAY/ SMOOTH FINISH
14	HOSE BIB AT FENCING	13/ L5.05	NATURAL GRAY/ SMOOTH FINISH
15	TOMBSTONE AT CMU WALL	15/ L5.05	NATURAL GRAY/ SMOOTH FINISH
16	DECK SHOWER	08/ L5.05	3-PERSON COLUMN SHOWER BY BRADLEY
17	SORTING TRASH COLLECTOR		PROVIDED BY OWNER
18	TRUNCATED DOMES	10/ L5.01	WAUSAU TILE ADA-2 12"X12" PAVERS, COLOR A-40 FED YELLOW 33538
19	TRASH AND RECYCLING RECEPTACLE	PER MANUF	PER SITE FURNISHINGS LEGEND SHEET L0.01
20	BIKE LOCKERS		PER SITE FURNISHING LEGEND SHEET L0.01
21	BIKE RACK		PER SITE FURNISHINGS LEGEND SHEET L0.01
22	DETECTABLE SIDE RAIL	03/ L5.05	STAINLESS STEEL
23	DRINKING FOUNTAIN	07/ L5.05	PER SITE FURNISHINGS LEGEND SHEET L0.01
24	CONCRETE CURB UNDER LOCKERS	12/ L5.01	NATURAL GRAY/ MEDIUM BROOM FINISH

REFERENCE KEYNOTES

KEY NOTE	DESCRIPTION	COMMENTS	DET.
A	EXISTING AC PAVING	PROTECT IN PLACE	
B	EXISTING CONC PAVING	PROTECT IN PLACE	
C	EXISTING CONC CURB/GUTTER	PROTECT IN PLACE	
D	EXISTING CONC CURB RAMP	PROTECT IN PLACE	
E	EXISTING CONC DRIVEWAY	PROTECT IN PLACE	
F	EXISTING BUILDING COLUMNS	PROTECT IN PLACE	
G	EXISTING BUILDING OVERHANG	PROTECT IN PLACE	
H	EXISTING TRUNCATED DOMES	PROTECT IN PLACE	
J	EXISTING BOLLARDS	PROTECT IN PLACE	
K	EXISTING SIGNAGE	PROTECT IN PLACE	
L	EXISTING LIGHT FIXTURE	PROTECT IN PLACE	
M	EXISTING LIGHT FIXTURE	TO BE RELOCATED	09/ L5.05
N	EXISTING CHAINLINK FENCING	PROTECT IN PLACE	
P	EXISTING VEHICULAR GATE	PROTECT IN PLACE	
Q	A.C. PAVING	PER CIVIL	
R	CONC CURB/GUTTER	PER CIVIL	
S	CONC WEDGE CURB	PER CIVIL	
T	CONC WHEEL STOP	PER CIVIL	
U	PARKING LOT STRIPING	PER CIVIL	
V	ADA EMBLEM	PER CIVIL	
W	STORMFILTER	PER CIVIL	
X	SHADE CANOPY OVERHANG	PER ARCH	
Y	SHADE CANOPY COLUMN	PER ARCH	
AA	POOL	PER AQUATICS	
BB	POOL STAIRS	PER AQUATICS	
CC	POOL HANDRAIL	PER AQUATICS	
DD	POOL LADDER	PER AQUATICS	
EE	DIVING BOARD	PER AQUATICS	
FF	CHAIR LIFT	PER AQUATICS	
GG	BLEACHERS	PER MANUF	
HH	WALL MOUNTED ADA SIGNAGE	PER CIVIL	
JJ	SURGE TANK	PER AQUATICS	
KK	POOL GUTTER	PER AQUATICS	
LL	SLOT DRAIN	PER AQUATICS	
MM	LIGHTING	PER ELEC	
NN	CURB RAMP	PER CIVIL	
PP	TRENCH DRAIL	PER CIVIL	

SITE SYMBOLS LEGEND

SYM.	DESC.	SYM.	DESC.	DET.
	FIRE HYDRANT		SAWCUT JOINT	02/ L5.01
CO	CLEANOUT		SAWCUT EXPANSION JOINTS	02/ L5.01
	DRAIN INLET		MATCHLINE	
WM	DOMESTIC WATER METER		PROPERTY LINE/ RIGHT OF WAY	
	IRRIGATION WATER METER		LIMIT OF WORK	
	DOMESTIC BACKFLOW PREVENTOR	T.O.S.	TOP OF SLOPE	
	POST INDICATOR VALVE	B.O.S.	TOE (BOTTOM) OF SLOPE	
	FIRE DEPT. BACKFLOW	FOC	FACE OF CURB	
	DOWN SLOPE DIRECTION OF RAMP	BOC	BACK OF CURB	
	ALIGN	PA	PLANTING AREA	
	DOUBLE DETECTOR CHECK		GATE VALVE	
	VALVE	W	WATER VAULT	
S	SEWER MANHOLE			

NOTE: UTILITIES SHOWN ARE FOR REFERENCE ONLY. SEE CIVIL AND ELEC DWGS FOR DETAILS AND EXACT LOCATIONS. FINAL LOCATIONS TO BE REVIEWED BY LANDSCAPE ARCHITECT.

IDENTIFICATION STAMP
DIV. OF THE STATE ARCHITECT
APP: 02-119490 INC:
REVIEWED FOR
SS ☑ FLS ☑ ACS ☑
DATE: 09/13/2022

LPA
ARCHITECTURE ENGINEERING INTERIORS
LANDSCAPE ARCHITECTURE PLANNING
916-287-2400 Office
916-287-2401 Fax
LPADesignStudios.com
431 I Street, Suite 107
Sacramento, California 95814

This document and all other project documents, ideas, aesthetics and designs incorporated therein are instruments of service. All project documents are copyright protected, are the property of LPA, Inc. (LPA) and cannot be lawfully used in whole or in part for any project or purpose except as set forth in the contractual agreement between LPA and its Client. The unauthorized disclosure and/or use of the project documents (including the creation of derivative works), may give rise to liability for copyright infringement, unlawful disclosure, use or misappropriation of property rights held by LPA. The unauthorized use of the project documents will give rise to the recovery of monetary losses and damages including attorney fees and costs for which the unauthorized user will be held liable. Project documents describe the design intent of the work and are not a representation of as-built or existing conditions. LPA is not responsible for any discrepancies between the project documents and the existing conditions.

DAVIS SR HIGH SCHOOL AQUATICS CENTER
315 W 14TH ST., Davis, CA 95616

Developed for
DAVIS JOINT UNIFIED SCHOOL DISTRICT

Revision	Date

Submittal	Date
50% DD REVIEW	06/15/2021
100% DD SUBMITTAL	07/26/2021
50% CD REVIEW	10/08/2021
100% CD DSA SUBMITTAL	10/22/2021
DSA SUBMITTAL	03/24/2022

Job Number	1904413
Date Published	10/22/2021
Checked By	AW, JC
Scale	

MATERIALS PLAN

L1.03

KEYNOTES

KEY NOTE	DESCRIPTION	DET/ SHT	COLOR / FINISH
01	CONCRETE PAVING - PEDESTRIAN	01/ L5.01	NATURAL GRAY/ MEDIUM BROOM FINISH
02	CONCRETE PAVING - POOL DECK	1/ AQ1.0	NATURAL GRAY/ MEDIUM BROOM FINISH
03	CONCRETE PAVING - VEHICULAR	01/ L5.01	NATURAL GRAY/ MEDIUM BROOM FINISH
04	CONCRETE FREESTANDING WALL	01 L5.05	NATURAL GRAY/ LT. SANDBLAST SIDES, SMOOTH TOP
05	CIP CONC CURB AT FENCING/COLUMN	09/ L5.01	NATURAL GRAY/ SMOOTH FINISH
06	CMU ENCLOSURE WALL	01/ L5.02	LIGHTWEIGHT / GROUND FACE, TO MATCH ARCHITECTURE
07	STEEL ENCLOSURE GATES	02/ L5.02	10% OPEN PERF METAL COLOR: MORNING GLORY SW 6971
08	CHAINLINK FENCE	01/ L5.04	GALVANIZED
09	CHAINLINK DOUBLE PEDESTRIAN GATE	02/ L5.04	GALVANIZED
10	TUBULAR STEEL FENCE	01/ L5.03	AEGIS II BY AMERISTAR COLOR: MORNING GLORY SW 6971
11	TUBULAR STEEL DOUBLE PEDESTRIAN GATE W/ PANIC HARDWARE	02/ L5.03	AEGIS II BY AMERISTAR COLOR: MORNING GLORY SW 6971
12	TUBULAR STEEL SINGLE PEDESTRIAN GATE W/ PANIC HARDWARE	03/ L5.03	AEGIS II BY AMERISTAR COLOR: MORNING GLORY SW 6971
13	TOMBSTONE AT FENCING	13/ L5.05	NATURAL GRAY/ SMOOTH FINISH
14	HOSE BIB AT FENCING	13/ L5.05	NATURAL GRAY/ SMOOTH FINISH
15	TOMBSTONE AT CMU WALL	15/ L5.05	NATURAL GRAY/ SMOOTH FINISH
16	DECK SHOWER	08/ L5.05	3-PERSON COLUMN SHOWER BY BRADLEY
17	SORTING TRASH COLLECTOR		PROVIDED BY OWNER
18	TRUNCATED DOMES	10/ L5.01	WAUSAU TILE ADA-2 12"X12" PAVERS, COLOR A-40 FED YELLOW 33538
19	TRASH AND RECYCLING RECEPTACLE	PER MANUF	PER SITE FURNISHINGS LEGEND SHEET L0.01
20	BIKE LOCKERS		PER SITE FURNISHING LEGEND SHEET L0.01
21	BIKE RACK		PER SITE FURNISHINGS LEGEND SHEET L0.01
22	DETECTABLE SIDE RAIL	03/ L5.05	STAINLESS STEEL
23	DRINKING FOUNTAIN	07/ L5.05	PER SITE FURNISHINGS LEGEND SHEET L0.01
24	CONCRETE CURB UNDER LOCKERS	12/ L5.01	NATURAL GRAY/ MEDIUM BROOM FINISH

REFERENCE KEYNOTES

KEY NOTE	DESCRIPTION	COMMENTS	DET.
A	EXISTING AC PAVING	PROTECT IN PLACE	
B	EXISTING CONC PAVING	PROTECT IN PLACE	
C	EXISTING CONC CURB/GUTTER	PROTECT IN PLACE	
D	EXISTING CONC CURB RAMP	PROTECT IN PLACE	
E	EXISTING CONC DRIVEWAY	PROTECT IN PLACE	
F	EXISTING BUILDING COLUMNS	PROTECT IN PLACE	
G	EXISTING BUILDING OVERHANG	PROTECT IN PLACE	
H	EXISTING TRUNCATED DOMES	PROTECT IN PLACE	
J	EXISTING BOLLARDS	PROTECT IN PLACE	
K	EXISTING SIGNAGE	PROTECT IN PLACE	
L	EXISTING LIGHT FIXTURE	PROTECT IN PLACE	
M	EXISTING LIGHT FIXTURE	TO BE RELOCATED	09/ L5.05
N	EXISTING CHAINLINK FENCING	PROTECT IN PLACE	
P	EXISTING VEHICULAR GATE	PROTECT IN PLACE	
Q	A.C. PAVING	PER CIVIL	
R	CONC CURB/GUTTER	PER CIVIL	
S	CONC WEDGE CURB	PER CIVIL	
T	CONC WHEEL STOP	PER CIVIL	
U	PARKING LOT STRIPING	PER CIVIL	
V	ADA EMBLEM	PER CIVIL	
W	STORMFILTER	PER CIVIL	
X	SHADE CANOPY OVERHANG	PER ARCH	
Y	SHADE CANOPY COLUMN	PER ARCH	
AA	POOL	PER AQUATICS	
BB	POOL STAIRS	PER AQUATICS	
CC	POOL HANDRAIL	PER AQUATICS	
DD	POOL LADDER	PER AQUATICS	
EE	DIVING BOARD	PER AQUATICS	
FF	CHAIR LIFT	PER AQUATICS	
GG	BLEACHERS	PER MANUF	
HH	WALL MOUNTED ADA SIGNAGE	PER CIVIL	
JJ	SURGE TANK	PER AQUATICS	
KK	POOL GUTTER	PER AQUATICS	
LL	SLOT DRAIN	PER AQUATICS	
MM	LIGHTING	PER ELEC	
NN	CURB RAMP	PER CIVIL	
PP	TRENCH DRAIL	PER CIVIL	

SITE SYMBOLS LEGEND

SYM.	DESC.	SYM.	DESC.	DET.
	FIRE HYDRANT		SAWCUT JOINT	02/ L5.01
CO	CLEANOUT		SAWCUT EXPANSION JOINTS	02/ L5.01
	DRAIN INLET		MATCHLINE	
WM	DOMESTIC WATER METER		PROPERTY LINE/ RIGHT OF WAY	
	IRRIGATION WATER METER		LIMIT OF WORK	
	DOMESTIC BACKFLOW PREVENTOR	T.O.S.	TOP OF SLOPE	
	POST INDICATOR VALVE	B.O.S.	TOE (BOTTOM) OF SLOPE	
	FIRE DEPT. BACKFLOW	FOC	FACE OF CURB	
	DOWN SLOPE DIRECTION OF RAMP	BOC	BACK OF CURB	
	ALIGN	PA	PLANTING AREA	
	DOUBLE DETECTOR CHECK		GATE VALVE	
	VALVE	W	WATER VAULT	
S	SEWER MANHOLE			

NOTE: UTILITIES SHOWN ARE FOR REFERENCE ONLY. SEE CIVIL AND ELEC DWGS FOR DETAILS AND EXACT LOCATIONS. FINAL LOCATIONS TO BE REVIEWED BY LANDSCAPE ARCHITECT.

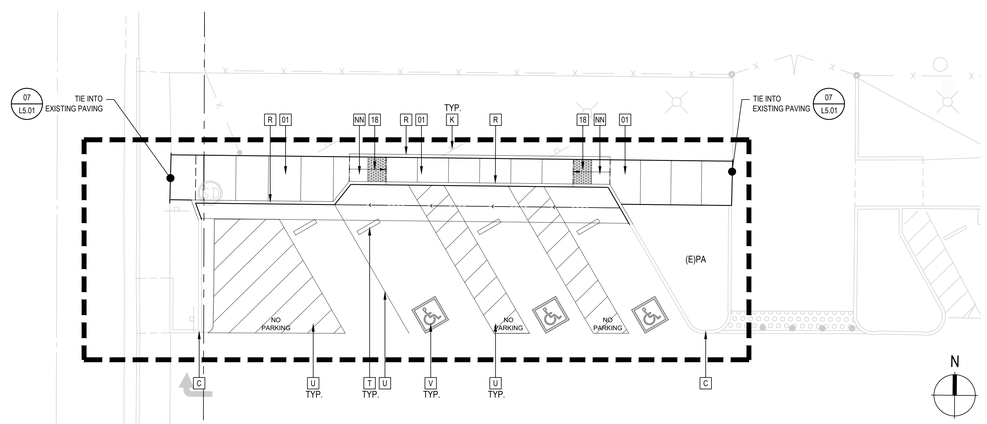

MATERIALS PLAN | 1" = 10'-0" | 05

IDENTIFICATION STAMP
DIV. OF THE STATE ARCHITECT
APP: 02-119490 INC:
REVIEWED FOR
SS ☑ FLS ☑ ACS ☑
DATE: 09/13/2022

LPA
ARCHITECTURE ENGINEERING INTERIORS
LANDSCAPE ARCHITECTURE PLANNING

916-287-2400 Office
916-287-2401 Fax
LPADesignStudios.com
431 I Street, Suite 107
Sacramento, California 95814

LICENSED LANDSCAPE ARCHITECT
JOHN CHRISTOPHER QUINTRELL
SIGNATURE
LICENSE NO. 4412
EXPIRATION DATE 01/31/2023
STATE OF CALIFORNIA

This document and all other project documents, ideas, aesthetics and designs incorporated therein are instruments of service. All project documents are copyright protected, are the property of LPA, Inc. (LPA) and cannot be lawfully used in whole or in part for any project or purpose except as set forth in the contractual agreement between LPA and its Client. The unauthorized disclosure and/or use of the project documents (including the creation of derivative works), may give rise to liability for copyright infringement, unlawful disclosure, use or misappropriation of property rights held by LPA. The unauthorized use of the project documents will give rise to the recovery of monetary losses and damages including attorney fees and costs for which the unauthorized user will be held liable.
Project documents describe the design intent of the work and are not a representation of as-built or existing conditions. LPA is not responsible for any discrepancies between the project documents and the existing conditions.

DAVIS SR HIGH SCHOOL
AQUATICS CENTER
315 W 14TH ST., Davis, CA 95616

Developed for
DAVIS JOINT UNIFIED SCHOOL DISTRICT

Revision	Date

Submittal	Date
50% DD REVIEW	06/15/2021
100% DD SUBMITTAL	07/26/2021
50% CD REVIEW	10/08/2021
100% CD DSA SUBMITTAL	10/22/2021
DSA SUBMITTAL	03/24/2022

Job Number	1904413
Date Published	10/22/2021
Checked By	AW, JC
Scale	

MATERIALS PLAN

L1.04

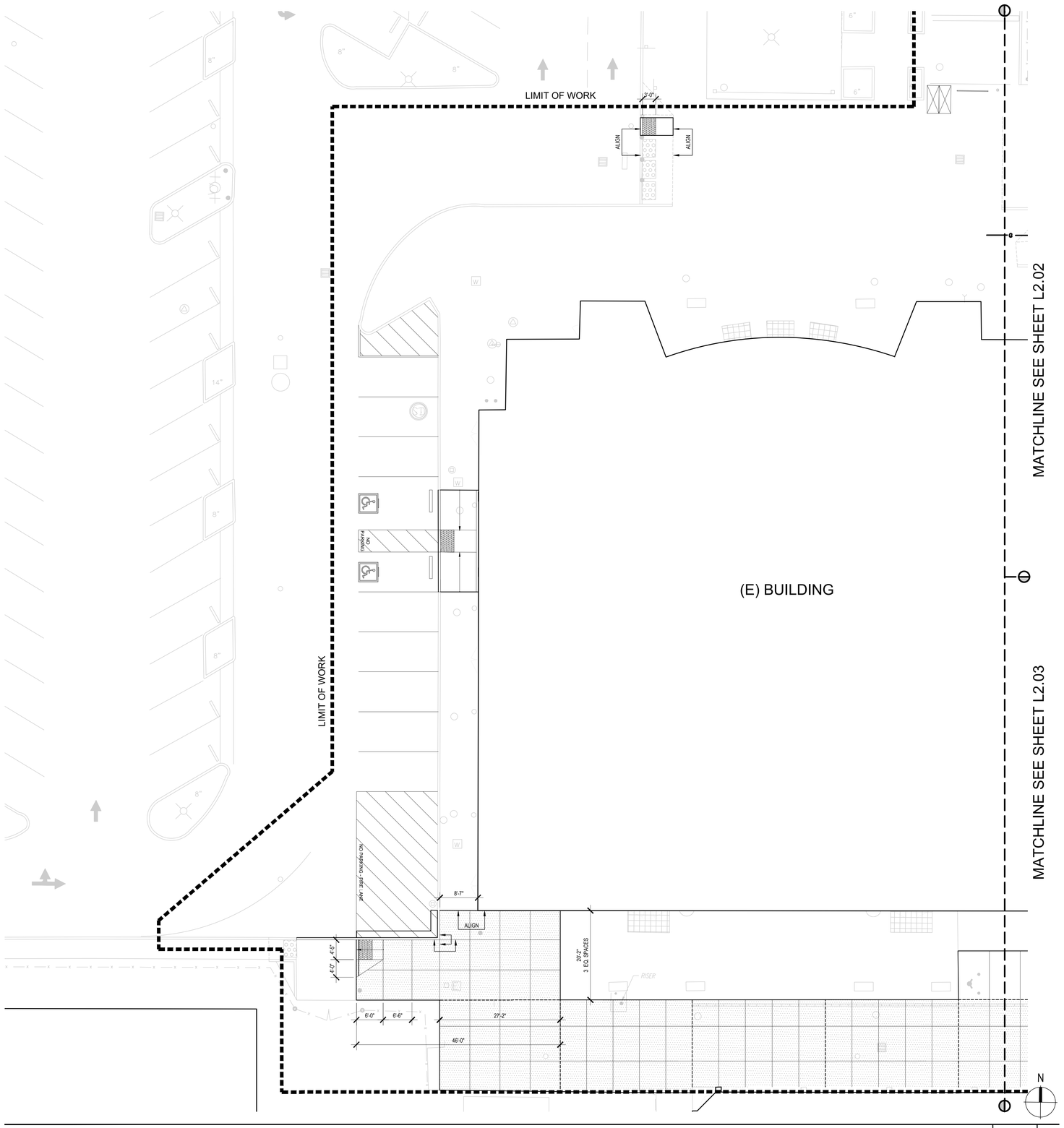

LAYOUT PLAN | 1" = 10'-0" | 05

IDENTIFICATION STAMP
DIV. OF THE STATE ARCHITECT
APP: 02-119490 INC:
REVIEWED FOR
SS ☑ FLS ☑ ACS ☑
DATE: 09/13/2022

LPA

ARCHITECTURE ENGINEERING INTERIORS
LANDSCAPE ARCHITECTURE PLANNING

916-287-2400 Office

916-287-2401 Fax

LPADesignStudios.com

431 I Street, Suite 107
Sacramento, California 95814

LICENSED LANDSCAPE ARCHITECT
COURTNEY WEIGEL
SIGNATURE
07/24/2022
DATE
07/31/2022
REGISTRATION
STATE OF CALIFORNIA

This document and all other project documents, ideas, aesthetics and designs incorporated therein are instruments of service. All project documents are copyright protected, are the property of LPA, Inc. (LPA) and cannot be lawfully used in whole or in part for any project or purpose except as set forth in the contractual agreement between LPA and its Client. The unauthorized disclosure and/or use of the project documents (including the creation of derivative works), may give rise to liability for copyright infringement, unlawful disclosure, use or misappropriation of property rights held by LPA. The unauthorized use of the project documents will give rise to the recovery of monetary losses and damages including attorney fees and costs for which the unauthorized user will be held liable.
Project documents describe the design intent of the work and are not a representation of as-built or existing conditions. LPA is not responsible for any discrepancies between the project documents and the existing conditions.

DAVIS SR HIGH SCHOOL
AQUATICS CENTER
315 W 14TH ST., Davis, CA 95616

Developed for
DAVIS JOINT UNIFIED SCHOOL DISTRICT

Revision	Date

Submittal	Date
50% DD REVIEW	06/15/2021
100% DD SUBMITTAL	07/26/2021
50% CD REVIEW	10/08/2021
100% CD DSA SUBMITTAL	10/22/2021
DSA SUBMITTAL	3/24/2022

Job Number	1904413
Date Published	03/24/2022
Checked By	AW, JC
Scale	

LAYOUT
PLAN

L2.01

IDENTIFICATION STAMP
DIV. OF THE STATE ARCHITECT
APP: 02-119490 INC:
REVIEWED FOR
SS ☑ FLS ☑ ACS ☑
DATE: 09/13/2022

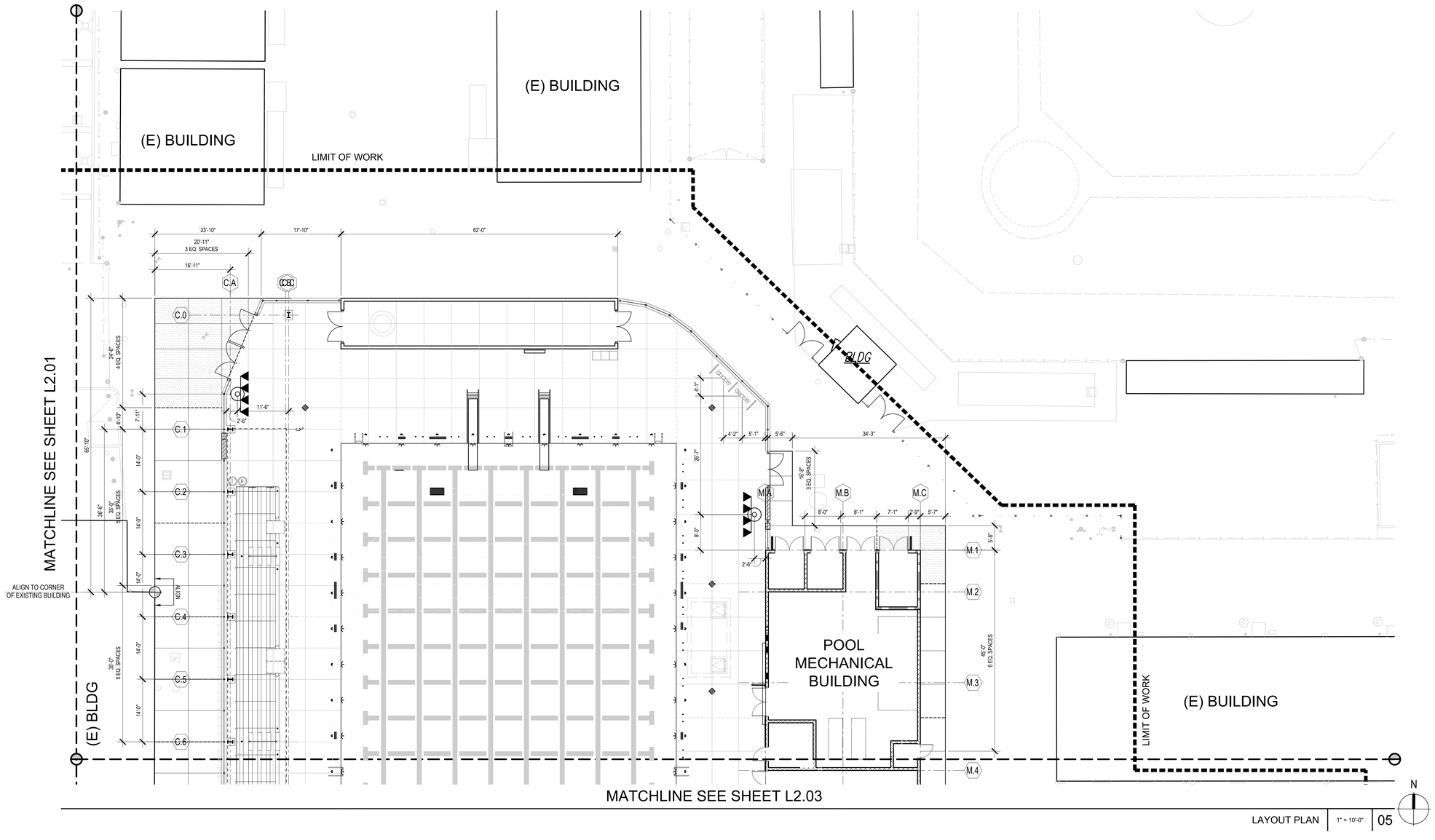

LAYOUT PLAN | 1" = 10'-0" | 05

LPA

ARCHITECTURE ENGINEERING INTERIORS
LANDSCAPE ARCHITECTURE PLANNING

916-287-2400 Office

916-287-2401 Fax

LPADesignStudios.com

431 I Street, Suite 107
Sacramento, California 95814

This document and all other project documents, ideas, aesthetics and designs incorporated therein are instruments of service. All project documents are copyright protected, are the property of LPA, Inc. (LPA) and cannot be lawfully used in whole or in part for any project or purpose except as set forth in the contractual agreement between LPA and its Client. The unauthorized disclosure and/or use of the project documents (including the creation of derivative works), may give rise to liability for copyright infringement, unlawful disclosure, use or misappropriation of property rights held by LPA. The unauthorized use of the project documents will give rise to the recovery of monetary losses and damages including attorney fees and costs for which the unauthorized user will be held liable.
Project documents describe the design intent of the work and are not a representation of as-built or existing conditions. LPA is not responsible for any discrepancies between the project documents and the existing conditions.

DAVIS SR HIGH SCHOOL
AQUATICS CENTER
315 W 14TH ST., Davis, CA 95616

Developed for
DAVIS JOINT UNIFIED SCHOOL DISTRICT

Revision	Date

Submittal	Date
50% DD REVIEW	06/15/2021
100% DD SUBMITTAL	07/26/2021
50% CD REVIEW	10/08/2021
100% CD DSA SUBMITTAL	10/22/2021
DSA SUBMITTAL	03/24/2022

Job Number	1904413
Date Published	10/22/2021
Checked By	AW, JC
Scale	

LAYOUT
PLAN

L2.02

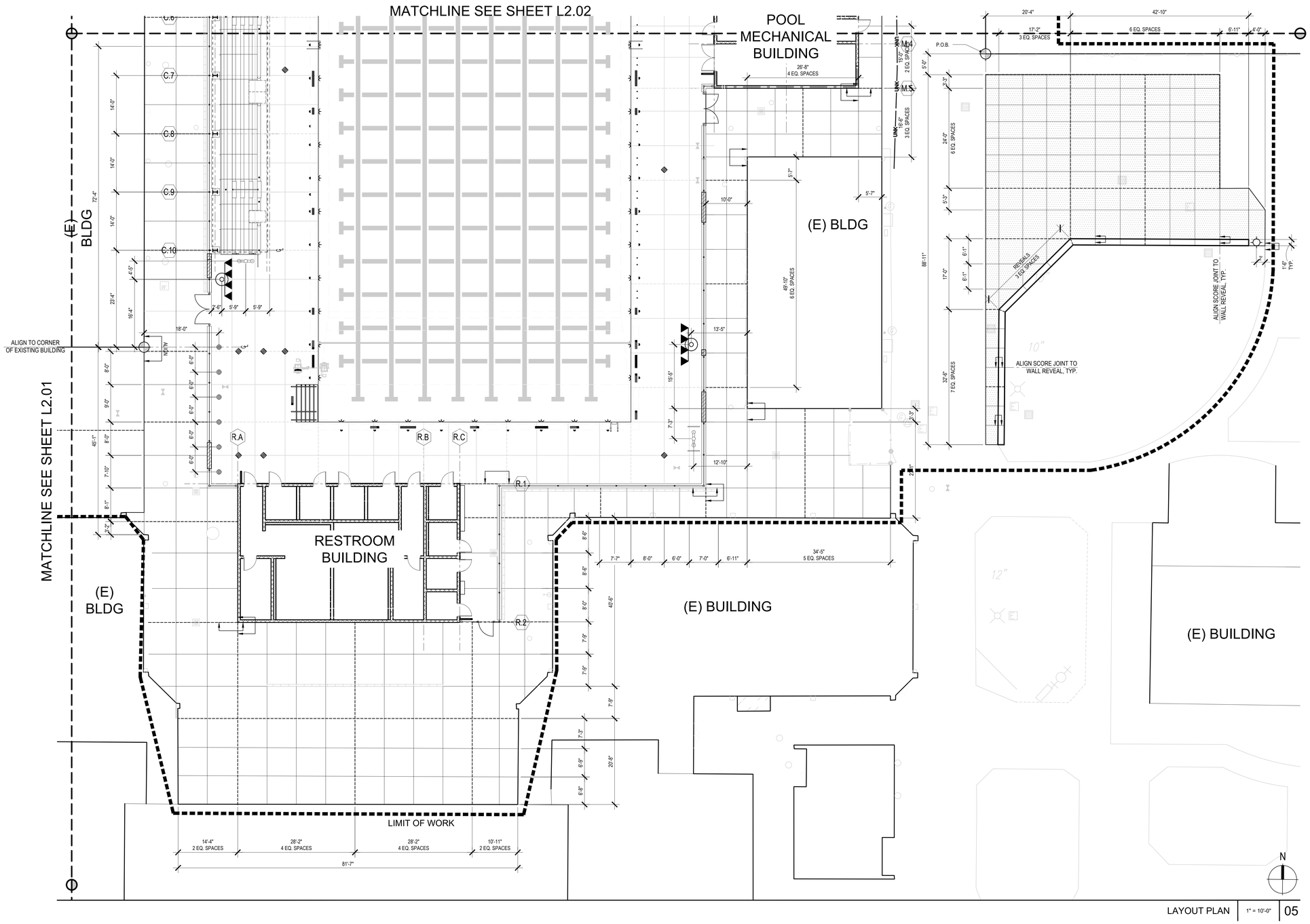

LAYOUT PLAN | 1" = 10'-0" | 05

IDENTIFICATION STAMP
DIV. OF THE STATE ARCHITECT
APP: 02-119490 INC:
REVIEWED FOR
SS ☑ FLS ☑ ACS ☑
DATE: 09/13/2022

LPA

ARCHITECTURE ENGINEERING INTERIORS
LANDSCAPE ARCHITECTURE PLANNING

916-287-2400 Office

916-287-2401 Fax

LPADesignStudios.com

431 I Street, Suite 107
Sacramento, California 95814

This document and all other project documents, ideas, aesthetics and designs incorporated therein are instruments of service. All project documents are copyright protected, are the property of LPA, Inc. (LPA) and cannot be lawfully used in whole or in part for any project or purpose except as set forth in the contractual agreement between LPA and its Client. The unauthorized disclosure and/or use of the project documents (including the creation of derivative works), may give rise to liability for copyright infringement, unlawful disclosure, use or misappropriation of property rights held by LPA. The unauthorized use of the project documents will give rise to the recovery of monetary losses and damages including attorney fees and costs for which the unauthorized user will be held liable.
Project documents describe the design intent of the work and are not a representation of as-built or existing conditions. LPA is not responsible for any discrepancies between the project documents and the existing conditions.

DAVIS SR HIGH SCHOOL
AQUATICS CENTER
315 W 14TH ST., Davis, CA 95616

Developed for
DAVIS JOINT UNIFIED SCHOOL DISTRICT

Revision	Date

Submittal	Date
50% DD REVIEW	06/15/2021
100% DD SUBMITTAL	07/26/2021
50% CD REVIEW	10/08/2021
100% CD DSA SUBMITTAL	10/22/2021
DSA SUBMITTAL	09/24/2022

Job Number	1904413
Date Published	10/22/2021
Checked By	AW, JC
Scale	

LAYOUT PLAN

L2.03

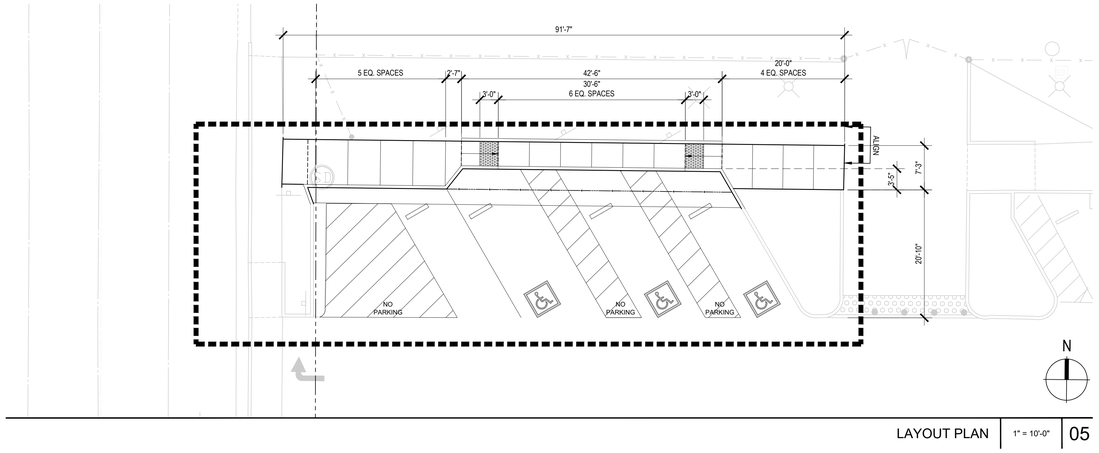

LAYOUT PLAN | 1" = 10'-0" | 05

IDENTIFICATION STAMP
DIV. OF THE STATE ARCHITECT
APP: 02-119490 INC:
REVIEWED FOR
SS ☑ FLS ☑ ACS ☑
DATE: 09/13/2022

LPA

ARCHITECTURE ENGINEERING INTERIORS
LANDSCAPE ARCHITECTURE PLANNING

916-287-2400 Office

916-287-2401 Fax

LPADesignStudios.com

431 I Street, Suite 107
Sacramento, California 95814

This document and all other project documents, ideas, aesthetics and designs incorporated therein are instruments of service. All project documents are copyright protected, are the property of LPA, Inc. (LPA) and cannot be lawfully used in whole or in part for any project or purpose except as set forth in the contractual agreement between LPA and its Client. The unauthorized disclosure and/or use of the project documents (including the creation of derivative works), may give rise to liability for copyright infringement, unlawful disclosure, use or misappropriation of property rights held by LPA. The unauthorized use of the project documents will give rise to the recovery of monetary losses and damages including attorney fees and costs for which the unauthorized user will be held liable.
Project documents describe the design intent of the work and are not a representation of as-built or existing conditions. LPA is not responsible for any discrepancies between the project documents and the existing conditions.

DAVIS SR HIGH SCHOOL
AQUATICS CENTER
315 W 14TH ST., Davis, CA 95616

Developed for
DAVIS JOINT UNIFIED SCHOOL DISTRICT

Revision	Date

Submittal	Date
50% DD REVIEW	06/15/2021
100% DD SUBMITTAL	07/26/2021
50% CD REVIEW	10/08/2021
100% CD DSA SUBMITTAL	10/22/2021
DSA SUBMITTAL	03/24/2022

Job Number	1904413
Date Published	10/22/2021
Checked By	AW, JC
Scale	

LAYOUT
PLAN

L2.04

IDENTIFICATION STAMP
DIV. OF THE STATE ARCHITECT
APP: 02-119490 INC:
REVIEWED FOR
SS ☑ FLS ☑ ACS ☑
DATE: 09/13/2022

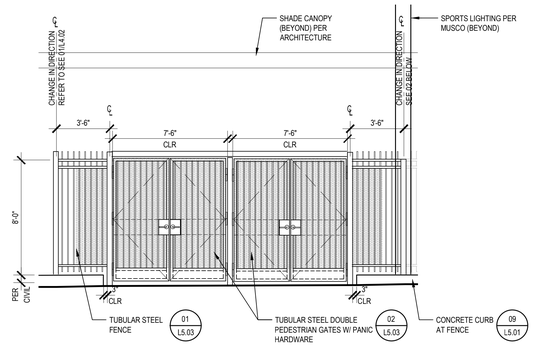

ELEVATION OF TUBE STEEL GATES AT ENTRY | 03

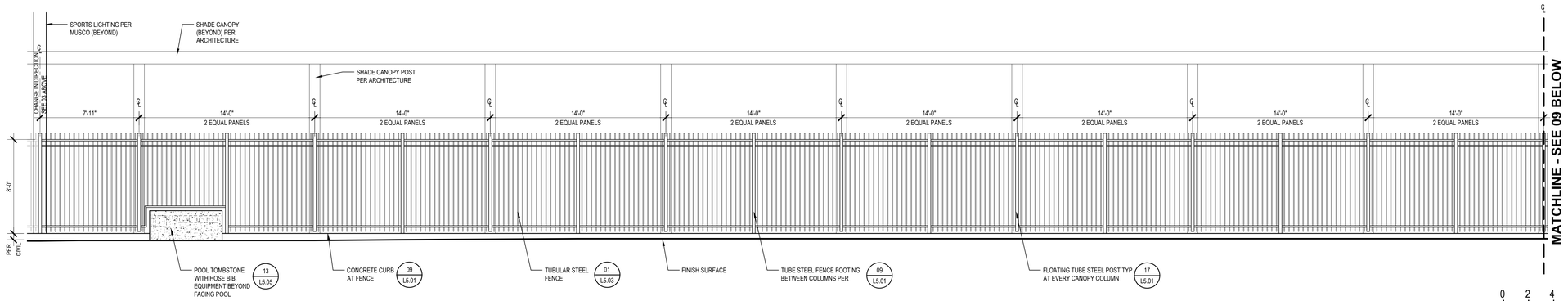

ELEVATION OF TUBE STEEL FENCE AT WEST OF POOL | 02

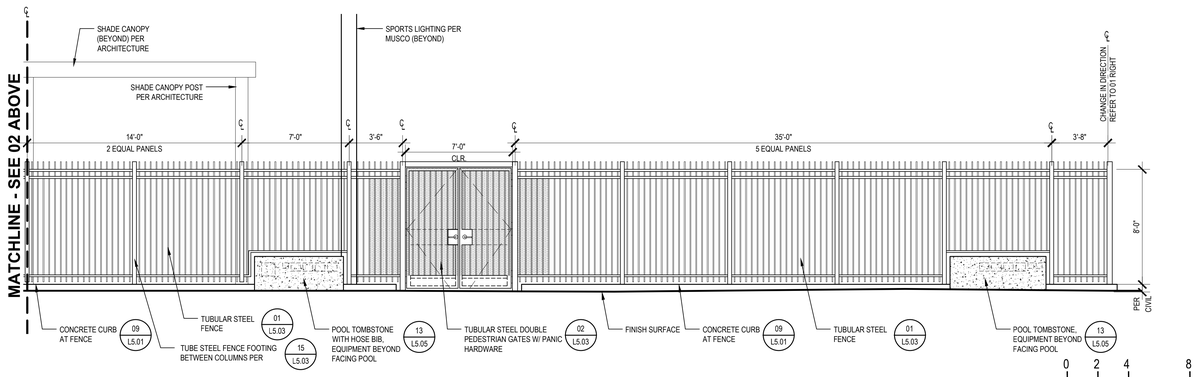

ELEVATION OF TUBE STEEL FENCE AT WEST OF POOL | 09

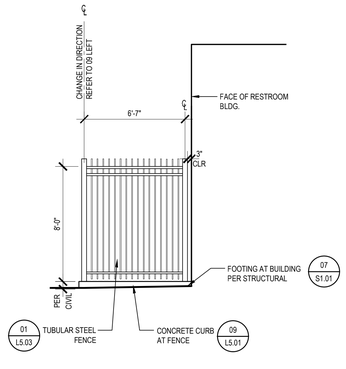

ELEVATION OF TUBE STEEL FENCE AT WEST OF RESTROOM BLDG | 01

LPA
ARCHITECTURE ENGINEERING INTERIORS
LANDSCAPE ARCHITECTURE PLANNING

916-287-2400 Office
916-287-2401 Fax
LPADesignStudios.com
431 I Street, Suite 107
Sacramento, California 95814

LICENSED LANDSCAPE ARCHITECT COURTNEY NUTTER 5124 SIGNATURE 07/14/2022 DATE 07/21/2022 REGISTRATION EXPIRES 1-31-2024 STATE OF CALIFORNIA

This document and all other project documents, ideas, aesthetics and designs incorporated therein are instruments of service. All project documents are copyright protected, are the property of LPA, Inc. (LPA) and cannot be lawfully used in whole or in part for any project or purpose except as set forth in the contractual agreement between LPA and its Client. The unauthorized disclosure and/or use of the project documents (including the creation of derivative works), may give rise to liability for copyright infringement, unlawful disclosure, use or misappropriation of property rights held by LPA. The unauthorized use of the project documents will give rise to the recovery of monetary losses and damages including attorney fees and costs for which the unauthorized user will be held liable.
Project documents describe the design intent of the work and are not a representation of as-built or existing conditions. LPA is not responsible for any discrepancies between the project documents and the existing conditions.

DAVIS SR HIGH SCHOOL
AQUATICS CENTER
315 W 14TH ST., Davis, CA 95616

Developed for
DAVIS JOINT UNIFIED SCHOOL DISTRICT

Revision	Date

Submittal	Date
50% DD REVIEW	06/15/2021
100% DD SUBMITTAL	07/26/2021
50% CD REVIEW	10/08/2021
100% CD DSA SUBMITTAL	10/22/2021
DSA SUBMITTAL	3/24/2022

Job Number	1904413
Date Published	03/24/2022
Checked By	AW, JC
Scale	

SECTIONS AND ELEVATIONS

L4.01

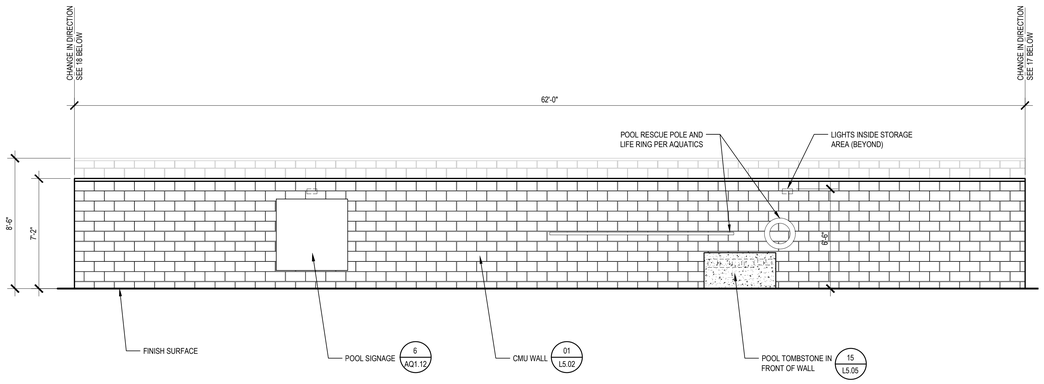

ELEVATION OF CMU WALL STORAGE AREA 04

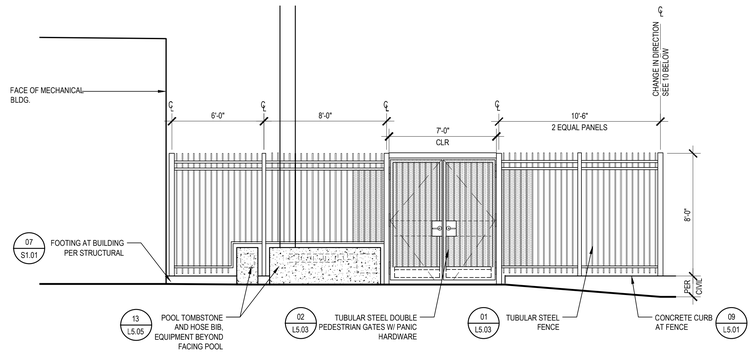

ELEVATION OF TUBE STEEL FENCE AT EAST OF POOL 03

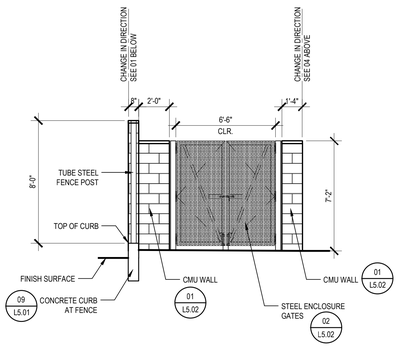

ELEVATION OF CMU WALL STORAGE AREA 18

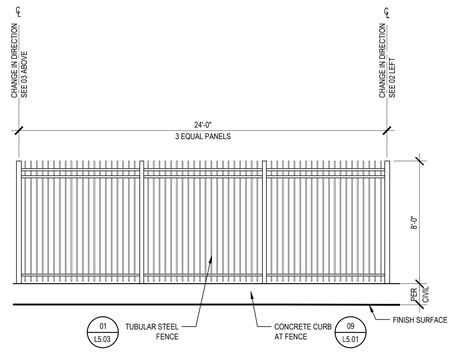

ELEVATION OF TUBE STEEL FENCE AT NORTHEAST OF POOL 10

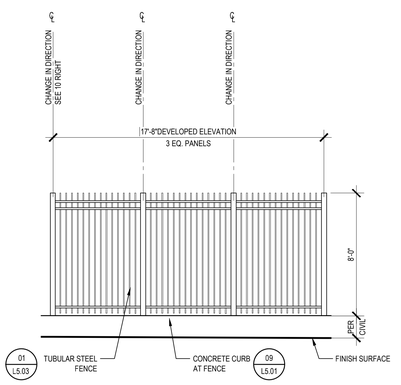

ELEVATION OF TUBE STEEL FENCE AT NORTHEAST OF POOL 02

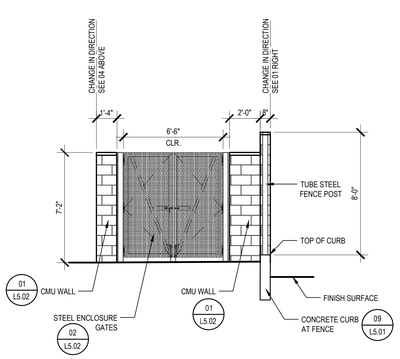

ELEVATION OF CMU WALL STORAGE AREA 17

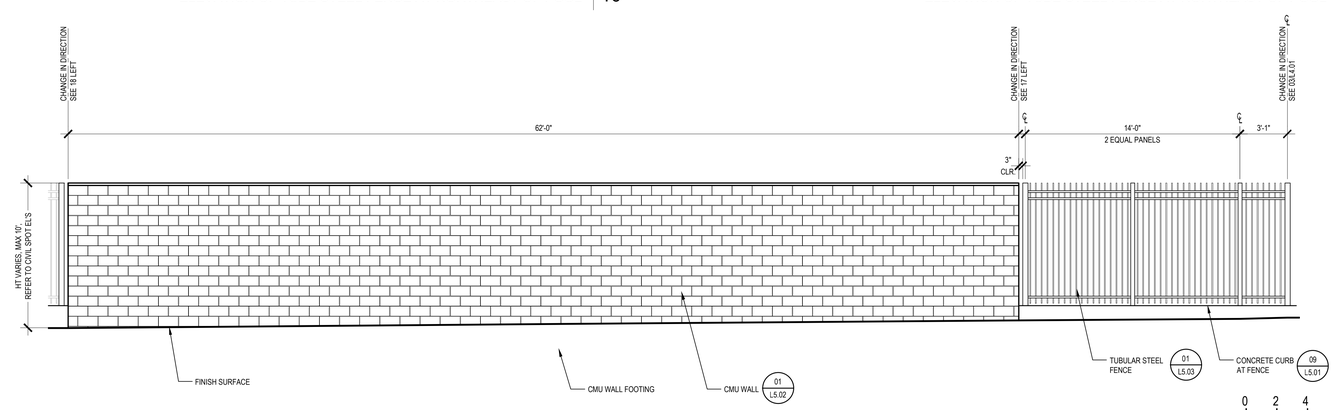

ELEVATION OF TUBE STEEL FENCE AND CMU WALL AT NORTH OF POOL 01

IDENTIFICATION STAMP
DIV. OF THE STATE ARCHITECT
APP: 02-119490 INC:
REVIEWED FOR
SS ☑ FLS ☑ ACS ☑
DATE: 09/13/2022

LPA

ARCHITECTURE ENGINEERING INTERIORS
LANDSCAPE ARCHITECTURE PLANNING

916-287-2400 Office

916-287-2401 Fax

LPADesignStudios.com

431 I Street, Suite 107
Sacramento, California 95814

LICENSED LANDSCAPE ARCHITECT COURTNEY ALLEN STATE OF CALIFORNIA
SIGNATURE
03/24/2022
DATE
07/26/2022
REGISTRATION EXPIRATION

This document and all other project documents, ideas, aesthetics and designs incorporated therein are instruments of service. All project documents are copyright protected, are the property of LPA, Inc. (LPA) and cannot be lawfully used in whole or in part for any project or purpose except as set forth in the contractual agreement between LPA and its Client. The unauthorized disclosure and/or use of the project documents (including the creation of derivative works), may give rise to liability for copyright infringement, unlawful disclosure, use or misappropriation of property rights held by LPA. The unauthorized use of the project documents will give rise to the recovery of monetary losses and damages including attorney fees and costs for which the unauthorized user will be held liable.
Project documents describe the design intent of the work and are not a representation of as-built or existing conditions. LPA is not responsible for any discrepancies between the project documents and the existing conditions.

DAVIS SR HIGH SCHOOL
AQUATICS CENTER
315 W 14TH ST., Davis, CA 95616

Developed for
DAVIS JOINT UNIFIED SCHOOL DISTRICT

Revision	Date

Submittal	Date
50% DD REVIEW	06/15/2021
100% DD SUBMITTAL	07/26/2021
50% CD REVIEW	10/08/2021
100% CD DSA SUBMITTAL	10/22/2021
DSA SUBMITTAL	3/24/2022

Job Number	1904413
Date Published	03/24/2022
Checked By	AW, JC
Scale	

SECTIONS AND ELEVATIONS

L4.02

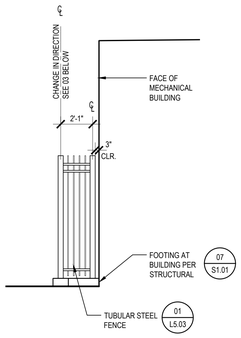

0 2 4 8

ELEVATION OF TUBE STEEL FENCE AT EAST OF POOL | 04

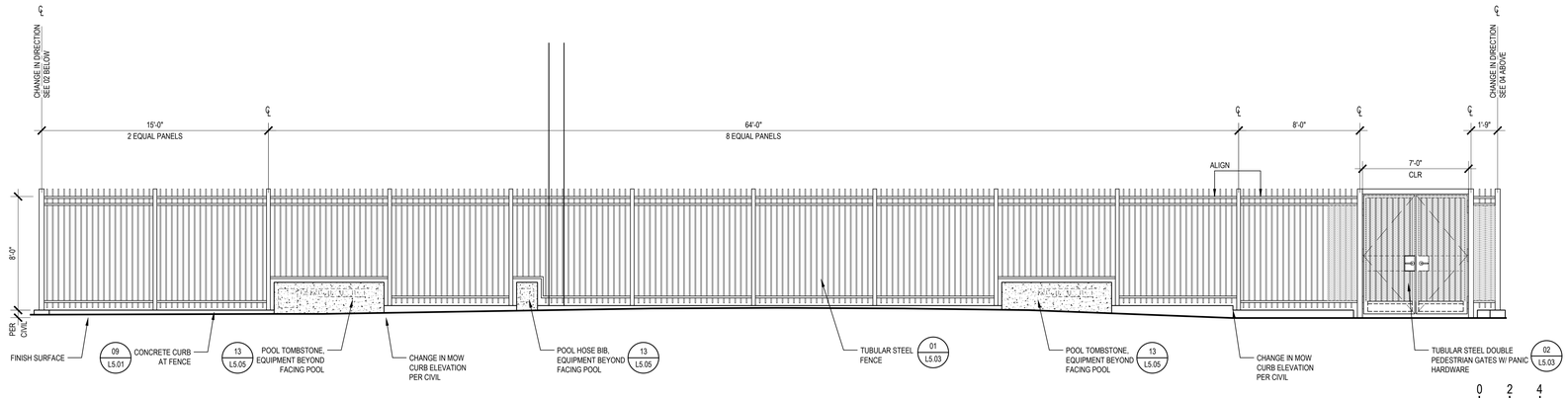

0 2 4 8

ELEVATION OF TUBE STEEL FENCE AT EAST OF POOL | 03

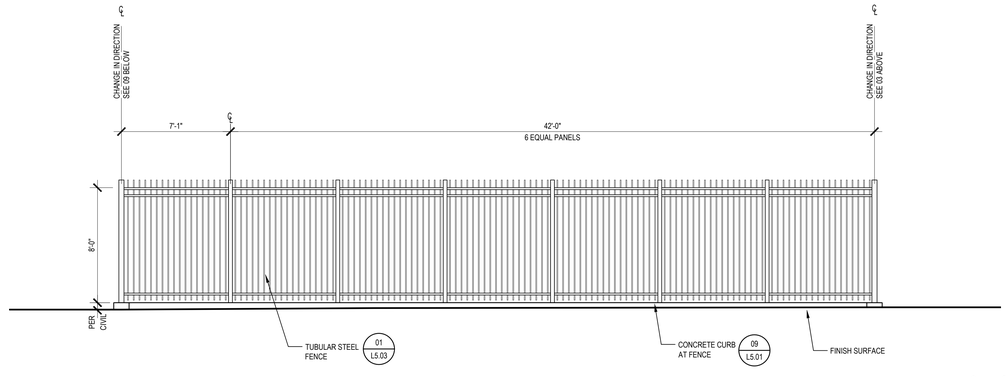

0 2 4 8

ELEVATION OF TUBE STEEL FENCE AT SOUTHEAST OF POOL | 02

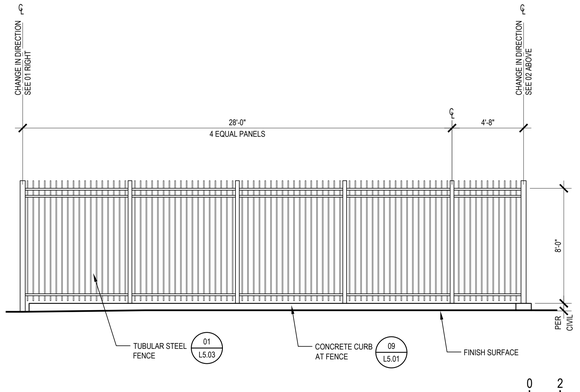

0 2 4 8

ELEVATION OF TUBE STEEL FENCE AT EAST OF RESTROOM BLDG | 09

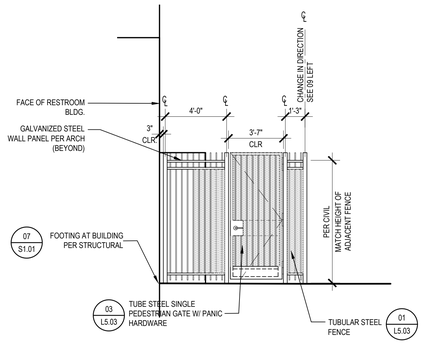

0 2 4 8

ELEVATION OF TUBE STEEL FENCE AT EAST OF RESTROOM BLDG | 01

IDENTIFICATION STAMP
DIV. OF THE STATE ARCHITECT
APP: 02-119490 INC:
REVIEWED FOR
SS ☑ FLS ☑ ACS ☑
DATE: 09/13/2022

LPA

ARCHITECTURE ENGINEERING INTERIORS
LANDSCAPE ARCHITECTURE PLANNING

916-287-2400 Office

916-287-2401 Fax

LPADesignStudios.com

431 I Street, Suite 107
Sacramento, California 95814

This document and all other project documents, ideas, aesthetics and designs incorporated therein are instruments of service. All project documents are copyright protected, are the property of LPA, Inc. (LPA) and cannot be lawfully used in whole or in part for any project or purpose except as set forth in the contractual agreement between LPA and its Client. The unauthorized disclosure and/or use of the project documents (including the creation of derivative works), may give rise to liability for copyright infringement, unlawful disclosure, use or misappropriation of property rights held by LPA. The unauthorized use of the project documents will give rise to the recovery of monetary losses and damages including attorney fees and costs for which the unauthorized user will be held liable.
Project documents describe the design intent of the work and are not a representation of as-built or existing conditions. LPA is not responsible for any discrepancies between the project documents and the existing conditions.

DAVIS SR HIGH SCHOOL
AQUATICS CENTER
315 W 14TH ST., Davis, CA 95616

Developed for
DAVIS JOINT UNIFIED SCHOOL DISTRICT

Revision	Date

Submittal	Date
50% DD REVIEW	06/15/2021
100% DD SUBMITTAL	07/26/2021
50% CD REVIEW	10/08/2021
100% CD DSA SUBMITTAL	10/22/2021
DSA SUBMITTAL	03/24/2022

Job Number	1904413
Date Published	10/22/2021
Checked By	AW, JC
Scale	

SECTIONS
AND
ELEVATIONS

L4.03

IDENTIFICATION STAMP
DIV. OF THE STATE ARCHITECT
APP: 02-119490 INC:
REVIEWED FOR
SS ☑ FLS ☑ ACS ☑
DATE: 09/13/2022

0 2 4 8

ELEVATION OF CHAINLINK FENCING 03

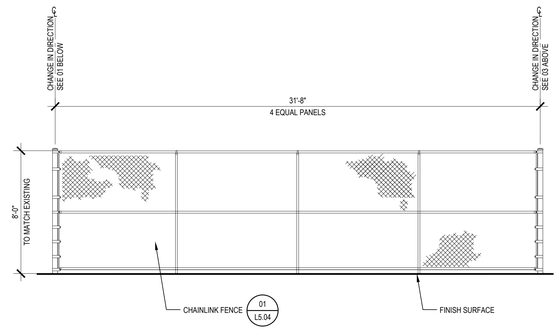

0 2 4 8

ELEVATION OF CHAINLINK FENCING 02

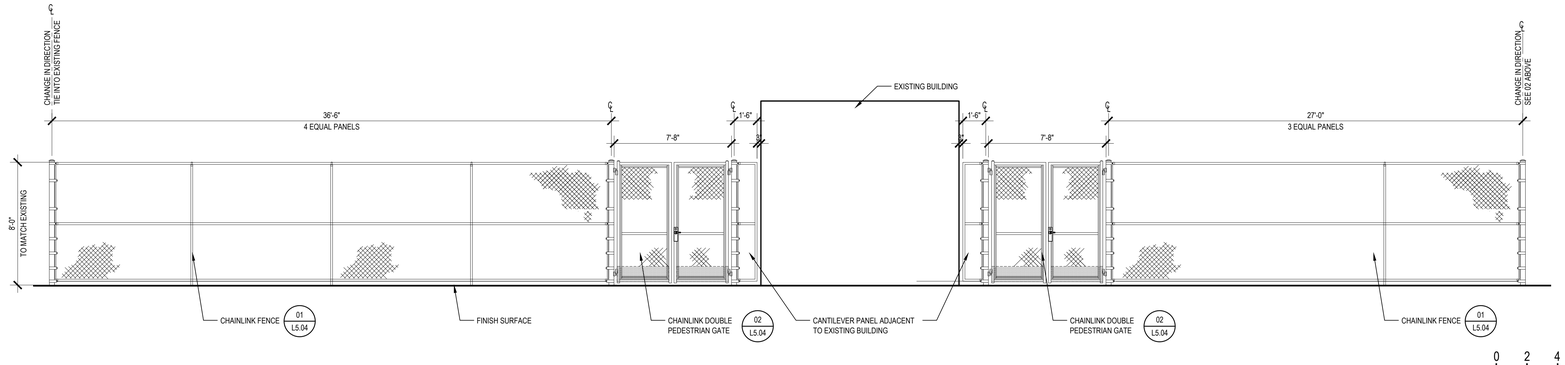

0 2 4 8

ELEVATION OF CHAINLINK FENCING 01

LPA

ARCHITECTURE ENGINEERING INTERIORS
LANDSCAPE ARCHITECTURE PLANNING

916-287-2400 Office

916-287-2401 Fax

LPADesignStudios.com

431 I Street, Suite 107
Sacramento, California 95814

This document and all other project documents, ideas, aesthetics and designs incorporated therein are instruments of service. All project documents are copyright protected, are the property of LPA, Inc. (LPA) and cannot be lawfully used in whole or in part for any project or purpose except as set forth in the contractual agreement between LPA and its Client. The unauthorized disclosure and/or use of the project documents (including the creation of derivative works), may give rise to liability for copyright infringement, unlawful disclosure, use or misappropriation of property rights held by LPA. The unauthorized use of the project documents will give rise to the recovery of monetary losses and damages including attorney fees and costs for which the unauthorized user will be held liable.
Project documents describe the design intent of the work and are not a representation of as-built or existing conditions. LPA is not responsible for any discrepancies between the project documents and the existing conditions.

DAVIS SR HIGH SCHOOL
AQUATICS CENTER
315 W 14TH ST., Davis, CA 95616

Developed for
DAVIS JOINT UNIFIED SCHOOL DISTRICT

Revision	Date

Submittal	Date
50% DD REVIEW	06/15/2021
100% DD SUBMITTAL	07/26/2021
50% CD REVIEW	10/08/2021
100% CD DSA SUBMITTAL	10/22/2021
DSA SUBMITTAL	03/24/2022

Job Number	1904413
Date Published	10/22/2021
Checked By	AW, JC
Scale	

SECTIONS
AND
ELEVATIONS

L4.04

CONCRETE CURB AT BUILDING — 12 (3"=1'-0", SAME)

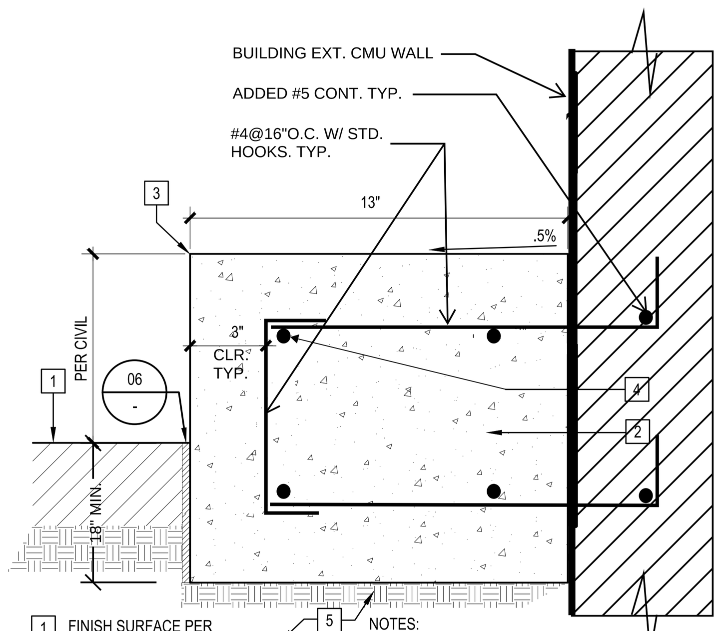

1. FINISH SURFACE PER MATERIALS/LAYOUT PLAN
2. MOW CURB PER MATERIALS PLAN. REFER TO KEYNOTE LEGEND FOR COLOR & FINISH.
3. 1/4" RADIUS TYP.
4. #4 REBAR CONTINUOUS. TYP.
5. BASE MATERIAL & COMPACTED SUBGRADE PER 01/-

NOTES:
A. PROVIDE SAWCUT JOINT EVERY 10' & EXPANSION JOINT EVERY 30' & @ EVERY CHANGE IN DIRECTION PER 03/-

PAVING JOINT @ CURB — 08 (3"=1'-0")

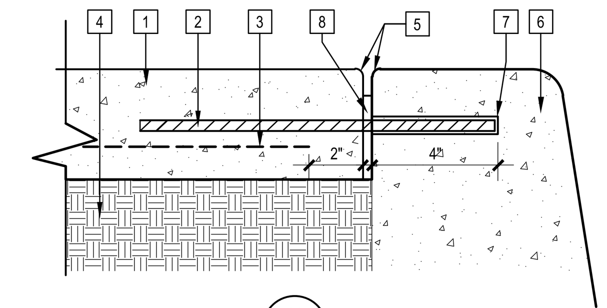

1. CONCRETE PAVING PER 01/-
2. SPEED DOWEL 02/-
3. STEEL REINFORCEMENT PER 01/-
4. BASE MATERIAL & COMPACTED SUBGRADE PER 01/-
5. 1/8" RADIUS
6. CONCRETE CURB PER CIVIL
7. DRILLED 5/8" DIA. SLIP SLEEVE @ CONCRETE CURB. DOWEL TO HAVE FREE MOVEMENT THIS SIDE
8. EXPANSION JOINT PER 04/-

NOTES:
A. EXPANSION JOINT @ VERTICAL SURFACE PER 06/-
B. NATIVE OR FILL SOIL SUPPORTING EXTERIOR NON-STRUCTURAL FLATWORK AND UNPAVED LANDSCAPING AREAS ARE EXEMPT FROM SPECIAL INSPECTION AND TESTING.
C. CONCRETE BATCH PLANT INSPECTION IS NOT REQUIRED.

EXPANSION JOINT ENLARGEMENT — 04 (FULL)

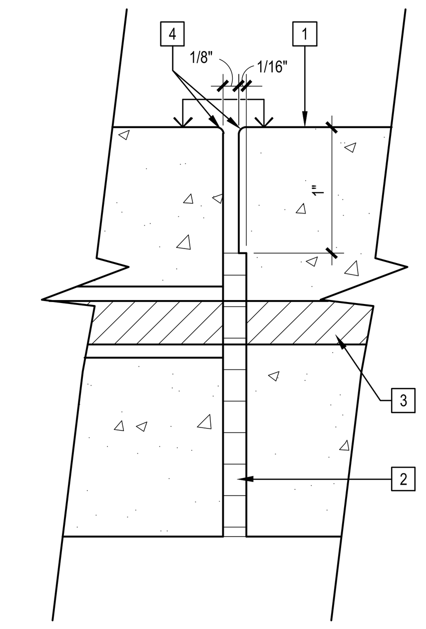

1. CONCRETE PAVING PER 01/-
2. 1/4" EXPANSION MATERIAL. SEE SPEC.
3. DOWEL PER 02/-
4. 1/8" TOOLED RADIUS OR 1/8" SAW CUT

NOTES:
ADDITIONAL INFORMATION PER 02/-

MOW CURB @ BUILDING CORNER — 15 (3"=1'-0")

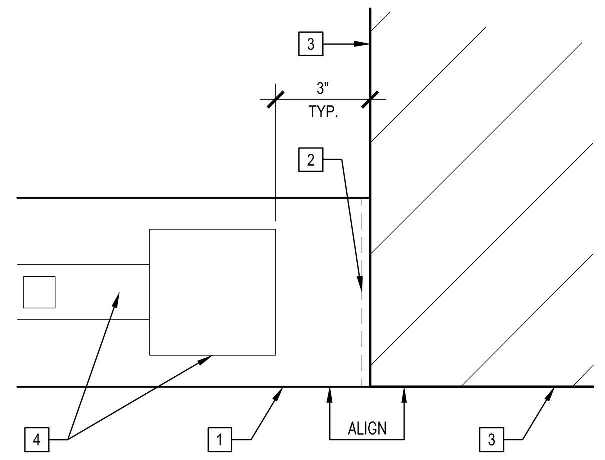

1. CONCRETE MOW CURB
2. EXPANSION JOINT AT VERTICAL SURFACE, SEE 06/-
3. FACE OF BUILDING
4. TUBE STEEL POST AND FENCE, WHERE OCCURS

NOTE:
A. PROVIDE EXPANSION JOINT AS SHOWN AT ALL CHANGES IN DIRECTION.

CORNER @ MOW CURB — 11 (3"=1'-0")

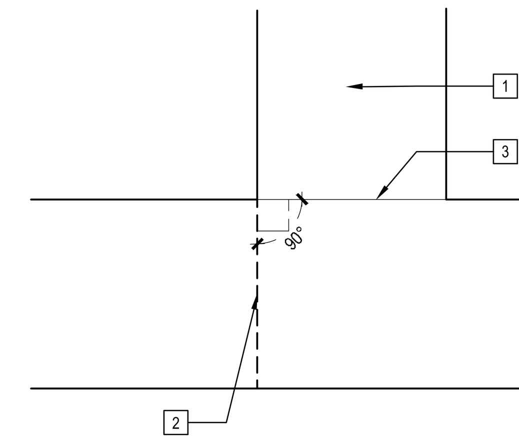

1. CONCRETE MOW CURB
2. EXPANSION JOINT, SEE 02/- SIM.
3. SAWCUT, SEE 02/- SIM.

NOTE:
A. PROVIDE EXPANSION JOINT AS SHOWN AT ALL CHANGES IN DIRECTION.

CONCRETE TIE IN — 07 (3"=1'-0")

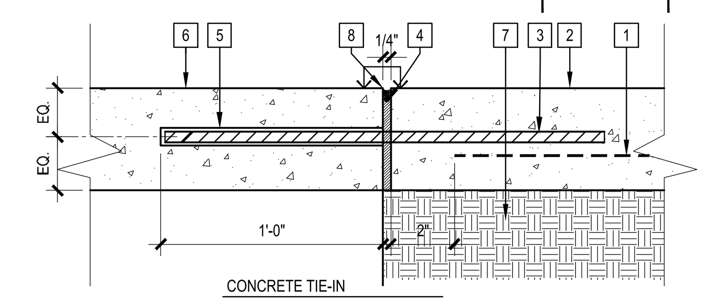

1. STEEL REINFORCEMENT PER 01/-
2. PROPOSED CONCRETE PAVING. CONCRETE COLOR, FINISH AND JOINT LOCATIONS MATERIALS PLAN.
3. 1/2" X 24" SMOOTH STEEL DOWEL, 18" O.C.
4. JOINT SEALANT W/BACKER ROD
5. DRILLED 5/8" SLIP SLEEVE @ EXISTING CONCRETE PAVING. DOWEL TO HAVE FREE MOVEMENT ON THIS SIDE.
6. EXISTING CONCRETE PAVING
7. BASE MATERIAL AND COMPACTED SUBGRADE PER 01/-
8. 1/8" RADIUS, TYP.

NOTE:
A. PROVIDE AT ALL LOCATIONS WHERE NEW CONCRETE JOINS EXISTING CONCRETE.
B. PROVIDE CLEAN SAWCUT AT EXISTING PAVING. EXTEND PROPOSED PAVING AS REQUIRED TO CLOSEST ADJACENT JOINT.
C. SEE CIVIL PLANS FOR LIMIT OF DEMOLITION.
D. NATIVE OR FILL SOIL SUPPORTING EXTERIOR NON-STRUCTURAL FLATWORK AND UNPAVED LANDSCAPING AREAS ARE EXEMPT FROM SPECIAL INSPECTION AND TESTING.
E. CONCRETE BATCH PLANT INSPECTION IS NOT REQUIRED.

CONCRETE MOW CURB AT CANOPY FOOTING — 17 (1" = 1'-0")

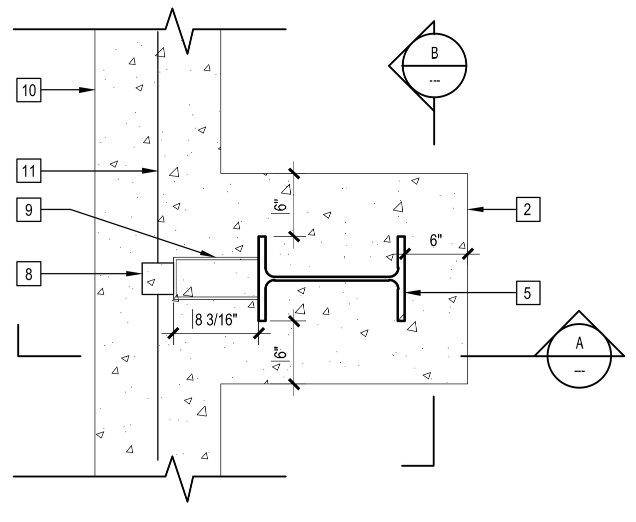

PLAN VIEW

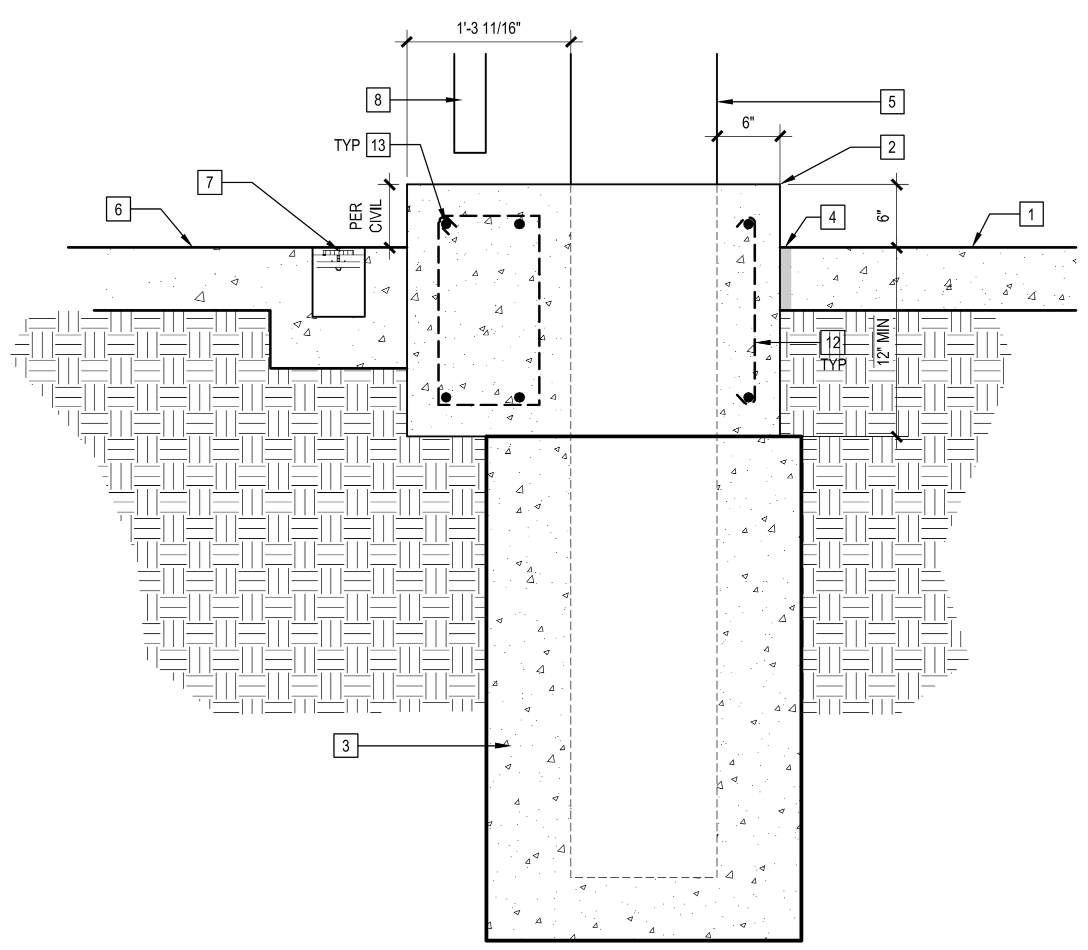

SECTION A

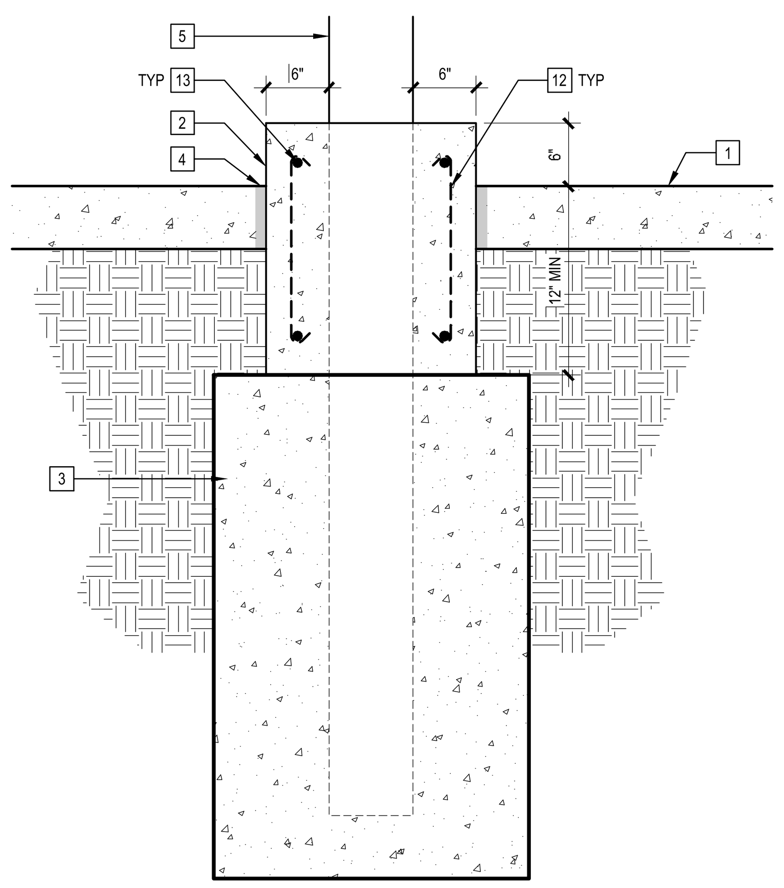

SECTION B

1. POOL DECK PER AQUATICS DRAWINGS
2. MOW CURB AT CASSION
3. CASSION AT CANOPY COLUMN. REFER TO STRUCTURAL FOR FOOTING DIMENSIONS AND REINFORCEMENT 08/S2.13
4. EXPANSION JOINT AT VERTICAL SURFACE PER 06/L5.01
5. CANOPY COLUMN
6. FINISH SURFACE PER MATERIALS PLAN
7. TRENCH DRAIN PER 04/C7.01
8. FLOATING TUBE STEEL FENCE POST ATTACHED TO COLUMN
9. ATTACHMENT PER STRUCTURAL 03/S6.16
10. MOW CURB AT FENCE 09/-
11. TUBE STEEL FENCE 01/L5.03
12. #4 TIES @16" O/C
13. #4 W/ STAND HOOK EXTEND INTO MOW CURB

1. PROVIDE EXPANSION JOINT @ ± 20' O.C. W/ TOOLED CONTROL JOINTS AT ± 5' O.C.

TRUNCATED DOME TILES — 10 (1-1/2" = 1'-0", SAME)

1. PRE-CAST TRUNCATED DOME TILES. COLOR TO BE FEDERAL YELLOW (33538) OF FEDERAL STANDARD 595C. SHALL COMPLY WITH CBC 11B-247, 11B-250, 11B-705
2. MORTAR SETTING BED PER MANUF.
3. CONCRETE PAVING PER 01/-
4. BASE MATERIAL SUBGRADE PER GEOTECHNICAL REPORT
5. EXPANSION JOINT PER 06/-
6. GROUT JOINT
7. FINISH SURFACE
8. ADJACENT PAVING
9. 5/8" SMOOTH STEEL DOWEL X 12" AT 18" O.C. FOR VEHICULAR USE "SPEED DOWEL". SEE SPECS.
10. CONCRETE CURB PER CIVIL DWGS.
11. #4 REBAR AT 24" O.C. EACH WAY

NOTE:
A. TOTAL LENGTH OF TRUNCATED DOME TILES PER PLAN.
B. TRUNCATED DOME TILES ARE TO CONFORM TO STATE ACCESSIBILITY STANDARDS. CONTRACTOR TO VERIFY STANDARDS PRIOR TO INSTALLATION.
C. DETECTABLE WARNING SURFACES SHALL CONTRAST VISUALLY WITH ADJACENT WALKING SURFACE. EITHER LIGHT ON DARK OR DARK ON LIGHT.

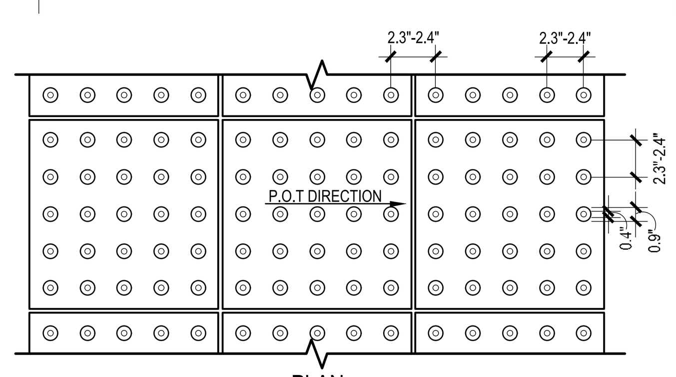

PLAN

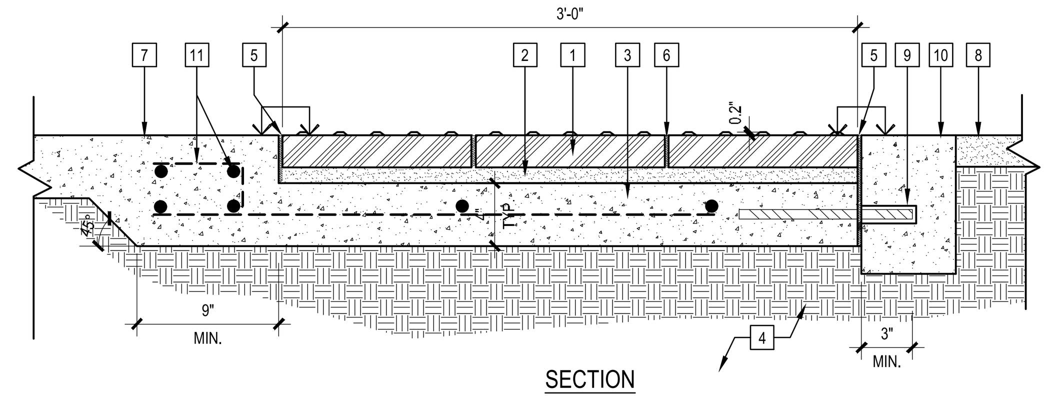

SECTION

E.J. @ VERTICAL SURFACE — 06 (3"=1'-0")

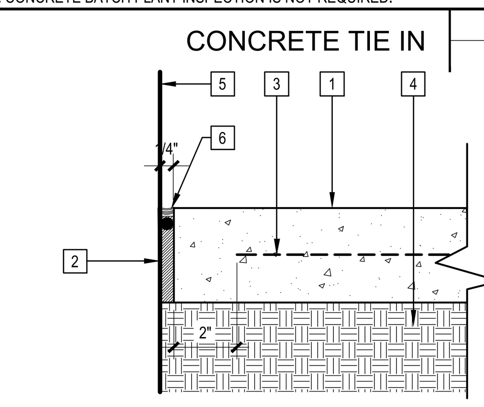

1. CONCRETE PAVING PER MATERIALS PLAN.
2. 1/4" EXPANSION MATERIAL W/BACKER ROD & JOINT SEALANT TO MATCH CONCRETE COLOR W/SEEDED SILICA SAND.
3. STEEL REINFORCEMENT PER 01/-
4. BASE MATERIAL & COMPACTED SUBGRADE PER 01/-
5. VERTICAL SURFACE
6. 1/8" RADIUS

NOTES:
A. PROVIDE EXPANSION JOINT @ ALL VERTICAL SURFACES.
B. EXPANSION JOINT @ CURB PER 08/-
C. NATIVE OR FILL SOIL SUPPORTING EXTERIOR NON-STRUCTURAL FLATWORK AND UNPAVED LANDSCAPING AREAS ARE EXEMPT FROM SPECIAL INSPECTION AND TESTING.
D. CONCRETE BATCH PLANT INSPECTION IS NOT REQUIRED.

CONCRETE PAVING JOINTS — 02 (1 1/2" = 1'-0")

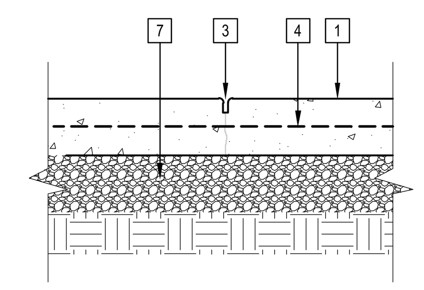

A. SAWCUT CONTROL JOINT

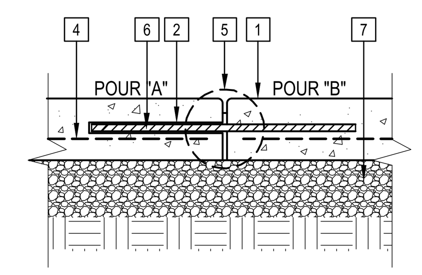

B. EXPANSION JOINT

1. CONCRETE PAVING PER DETAIL 01/-
2. "SPEED DOWEL" BY "GREEN STREAK" CONCRETE ACCESSORIES. PRODUCT # PSD12/ #4TX
3. 1/8" WIDE SAWCUT CONTRACTION JOINT - CUT TO 1/4 DEPTH OF SLAB. PROVIDE TIGHT ⅛ INCH RADIUS ON EDGE OF PAVING BEFORE SAWCUTTING.
4. REBAR PER DETAIL 01/-
5. SEE ENLARGEMENT DETAIL FOR JOINT 04/-
6. PEDESTRIAN: 5/8" SMOOTH STEEL DOWEL X 24" @ 24" O.C. VEHICULAR: 5/8" SMOOTH STEEL DOWEL X 24" @ 18" O.C.
7. BASE PER GEOTECH REPORT

NOTES:
A. NATIVE OR FILL SOIL SUPPORTING EXTERIOR NON-STRUCTURAL FLATWORK AND UNPAVED LANDSCAPING AREAS ARE EXEMPT FROM SPECIAL INSPECTION AND TESTING.
B. CONCRETE BATCH PLANT INSPECTION IS NOT REQUIRED.

CONCRETE MOW CURB AT TUBE STEEL FENCE FOOTING — 09 (1" = 1'-0")

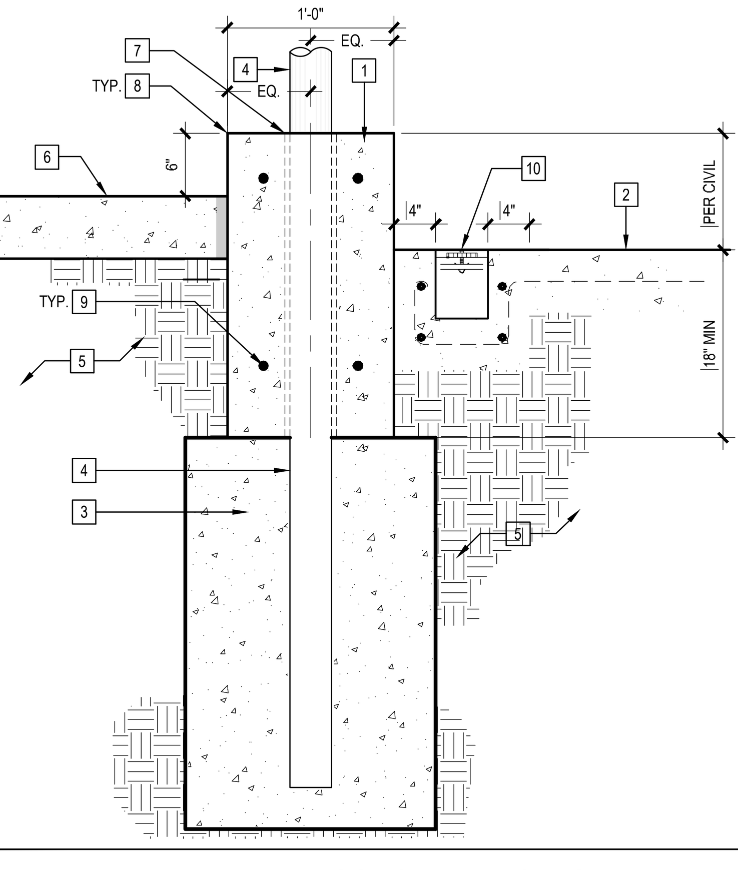

1. C.I.P. CONCRETE MOW CURB COLOR AND FINISH PER LAYOUT AND MATERIALS PLAN
2. FINISH GRADE/ FINISH SURFACE, WHERE OCCURS.
3. C.I.P. CONCRETE FOOTING 01/S1.01
4. TUBE STEEL FENCE POST
5. BASE MATERIAL AND COMPACTED SUBGRADE PER GEOTECHNICAL REPORT
6. POOL DECK PER POOL DRAWINGS
7. EXPANSION JOINT AT VERTICAL SURFACE 06/-
8. 1/4" RADIUS, TYP.
9. NO. 4 REBAR HORIZONTAL CONTINUOUS, TYP.
10. TRENCH DRAIN PER 04/C7.01

NOTES:
1. PROVIDE EXPANSION JOINT @ ± 20' O.C. W/ TOOLED CONTROL JOINTS AT ± 5' O.C.
2. CONCRETE BATCH PLANT INSPECTION IS NOT REQUIRED.
3. FOR MOW CURB AT CANOPY COLUMN SEE 17/-
4. FOR MOW CURB AT BUILDING CORNER SEE 15/-
5. FOR CORNER AT MOW CURB SEE 11/-

CONC. PAVING W/ THICKENED EDGE — 05 (1 1/2"=1'-0")

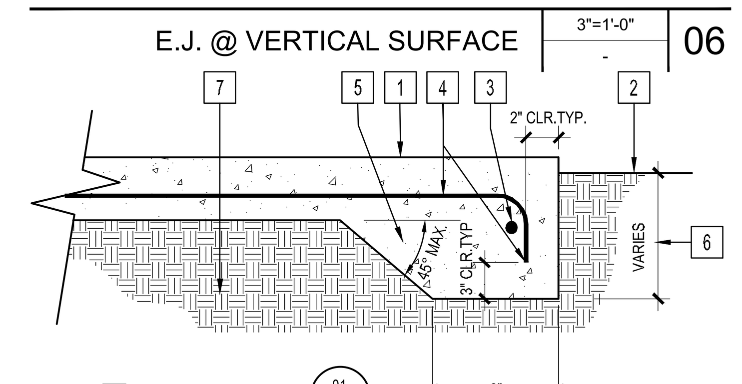

1. CONCRETE PAVING PER 01/-
2. ADJACENT SURFACE PER MATERIALS PLAN
3. #4 REBAR CONTINUOUS
4. EXTEND REINFORCEMENT FROM PAVING INTO THICKENED EDGE & WRAP ENDS
5. THICKENED EDGE
6. 9" DEPTH FOR PEDESTRIAN PAVING; 12" DEPTH FOR VEHICULAR PAVING
7. BASE MATERIAL & COMPACTED SUBGRADE PER 01/-

NOTES:
A. ADD EXPANSION JOINTS @ ALL THICKENED EDGE CONDITIONS ADJACENT TO OTHER PAVING TYPES PER 02/-
B. EXPANSION JOINT @ CURB PER 08/-
C. NATIVE OR FILL SOIL SUPPORTING EXTERIOR NON-STRUCTURAL FLATWORK AND UNPAVED LANDSCAPING AREAS ARE EXEMPT FROM SPECIAL INSPECTION AND TESTING.
D. CONCRETE BATCH PLANT INSPECTION IS NOT REQUIRED.

CONCRETE PAVING — 01 (3" = 1'-0")

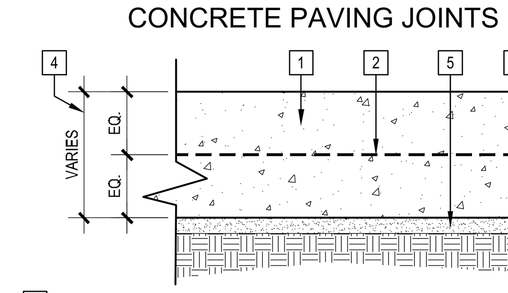

1. CONCRETE PAVING PER MATERIALS PLAN. REFER TO KEYNOTE LEGEND FOR FINISH & COLOR.
2. #3 @ 24" OC EW
3. PREPARE SUBGRADE PER GEOTECHNICAL REPORT
4. THICKNESS PER CIVIL
5. 2" SAND LAYER.

NOTES:
A. SAWCUT & EXPANSION JOINTS PER 02/-
B. PROVIDE DOWELS WHERE NEW CONCRETE TIES INTO EXISTING PER 07/-
C. DO NOT ALLOW CONCRETE OVER-POUR INTO ADJACENT PLANTERS.
D. EXPANSION JOINTS @ VERTICAL SURFACE PER 06/-
E. EXPANSION JOINTS @ CURB PER 08/-
F. PROVIDE THICKENED EDGE & TRIM BARS @ ALL PROTRUSIONS IN PAVING @ ALL WEAKENED PLANE CONDITIONS, SUCH AS COLUMNS, WALLS, OR OTHER SIMILAR CONDITIONS AND WHERE PAVING ADJACENT TO PLANTING. 05/-
G. NATIVE OR FILL SOIL SUPPORTING EXTERIOR NON-STRUCTURAL FLATWORK AND UNPAVED LANDSCAPING AREAS ARE EXEMPT FROM SPECIAL INSPECTION AND TESTING.
H. CONCRETE BATCH PLANT INSPECTION IS NOT REQUIRED.

IDENTIFICATION STAMP
DIV. OF THE STATE ARCHITECT
APP: 02-119490 INC:
REVIEWED FOR
SS ☑ FLS ☑ ACS ☑
DATE: 09/13/2022

LPA

ARCHITECTURE ENGINEERING INTERIORS
LANDSCAPE ARCHITECTURE PLANNING

916-287-2400 Office
916-287-2401 Fax
LPADesignStudios.com

431 I Street, Suite 107
Sacramento, California 95814

LICENSED LANDSCAPE ARCHITECT — STATE OF CALIFORNIA

This document and all other project documents, ideas, aesthetics and designs incorporated therein are instruments of service. All project documents are copyright protected, are the property of LPA, Inc. (LPA) and cannot be lawfully used in whole or in part for any project or purpose except as set forth in the contractual agreement between LPA and its Client. The unauthorized disclosure and/or use of the project documents (including the creation of derivative works), may give rise to liability for copyright infringement, unlawful disclosure, use or misappropriation of property rights held by LPA. The unauthorized use of the project documents will give rise to the recovery of monetary losses and damages including attorney fees and costs for which the unauthorized user will be held liable. Project documents describe the design intent of the work and are not a representation of as-built or existing conditions. LPA is not responsible for any discrepancies between the project documents and the existing conditions.

DAVIS SR HIGH SCHOOL AQUATICS CENTER
315 W 14TH ST., Davis, CA 95616

Developed for
DAVIS JOINT UNIFIED SCHOOL DISTRICT

Revision	Date

Submittal	Date
50% DD REVIEW	06/15/2021
100% DD SUBMITTAL	07/26/2021
50% CD REVIEW	10/08/2021
100% CD DSA SUBMITTAL	10/22/2021
DSA SUBMITTAL	3/24/2022

Job Number	1904413
Date Published	03/24/2022
Checked By	AW, JC
Scale	

CONSTRUCTION DETAILS

L5.01

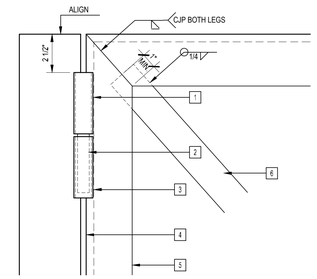

1 1" DIA. PIPE WITH 1/4"x4"x4" PLATE WELDED TO PIPE AND GATE FRAME

2 8" LONG ROD WELDED TO TOP PIPE SLEEVE AND SET IN BOTTOM SLEEVE

3 1" DIA. PIPE WITH 1/4"x4"x4" PLATE WELDED TO PIPE AND JAMB

4 STEEL POST

5 STEEL GATE FRAME JAMB

6 DIAGONAL BRACE PER 02 -

STORAGE YARD GATE HINGE

3" = 1'-0" | DT02SD05 | 08

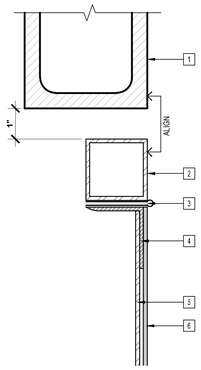

1 CMU WALL PER 01 -

2 STEEL POST

3 HINGE - 3 PER JAMB SEE 08 -

4 3"X3"X1/4" STEEL ANGLE GATE FRAME

5 1/4" X 2" DIAGONAL BRACE

6 PERFORATED METAL PANEL PER 02 -

STORAGE YARD GATE JAMB

3" = 1'-0" | DT02SD02 | 04

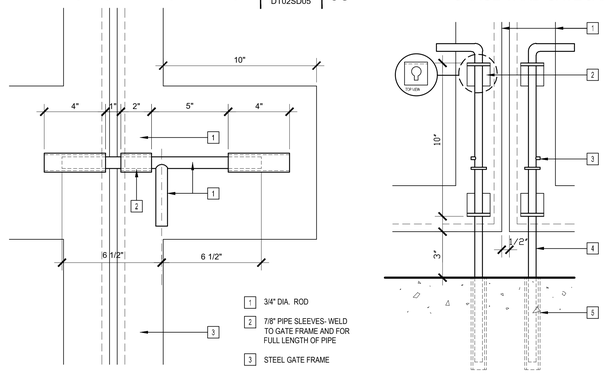

1 3/4" DIA. ROD

2 7/8" PIPE SLEEVES- WELD TO GATE FRAME AND FOR FULL LENGTH OF PIPE

3 STEEL GATE FRAME

SLIDE BOLT

3" = 1'-0" | DT02SD03 | 07

1 METAL GATES

2 1 1/2" x 1 1/2" x 1 1/2" LONG ANGLE-PUNCH 5/8" HOLE FOR CANE BOLT & SLOT @ TOP ANGLE

3 1/4" LONG 3/16" STL. ROD-WELD TO CANE

4 1/2" DIA. x 18" LONG CANE BOLT

5 6" LONG 7/8" DIA. PIPE SLEEVE SET IN CONCRETE

CANE BOLT

3" = 1'-0" | DT02SD04 | 03

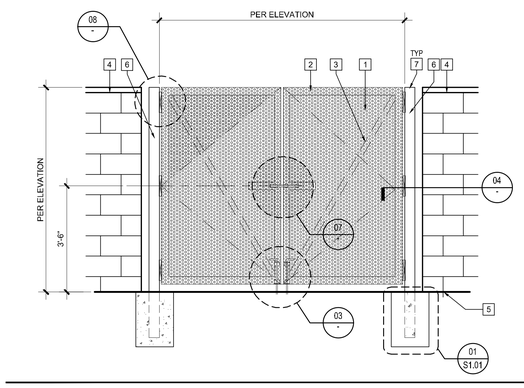

1 GALVANIZED STEEL PERFORATED METAL. 1/4" THICK, 3/16" DIA. ROUND ON 3/8" STAGGERED CENTERS (23% OPEN). PROVIDE 1" CLEAR BORDER AROUND PERIMETER. CUSTOM AS PART OF THE PERFORATED SHEET. 3/16" FILET WELD X 2" LONG EVERY 6" AROUND FRAME

2 3" X 3" X ¼" STL. ANGLE GATE FRAME 08 -

3 ¼" X 2" DIAGONAL BRACE

4 CMU FREE-STANDING WALL PER 01 -

5 FINISH SURFACE

6 4"X4"X3/16" SQ. TUBE STEEL POST.

7 TUBULAR STEEL CAP AT ALL POSTS PER 12 L5.03

NOTE:
ALL COMPONENTS SHALL RECEIVE A SHOP APPLIED 8515 ZINC GALVANIZED FINISH AND URETHANE PAINT SYSTEM. COLOR TO BE BLUE TO MATCH ARCH.

PERFORATED METAL DOUBLE GATE AT STORAGE YARD

1/2" = 1'-0" | SCALE | 02

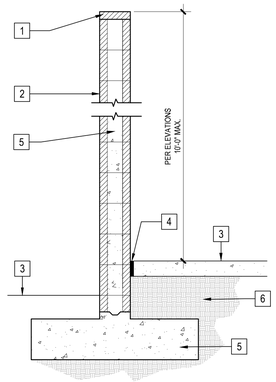

1 CMU WALL CAP: 2"x8"x16". COLOR AND FINISH TO MATCH BLOCK

2 CMU BLOCK: 8x8"x16" RUNNING BOND. COLOR AND FINISH PER LAYOUT AND MATERIALS PLAN. INTEGRAL COLOR GROUT PER SPECIFICATIONS. FILL ALL CELLS SOLID.

3 FINISH SURFACE / FINISH GRADE

4 EXPANSION JOINT 06 L5.01

5 STEEL REINFORCEMENT AND CONCRETE FOOTING PER 02 S1.01

6 COMPACTED SUBGRADE PER GEOTECHNICAL REPORT

NOTES:
1. CONCRETE BATCH PLANT INSPECTION IS NOT REQUIRED.

CMU ENCLOSURE WALL

3/4" = 1'-0" | - | 01

IDENTIFICATION STAMP
DIV. OF THE STATE ARCHITECT
APP: 02-119490 INC:
REVIEWED FOR
SS ☑ FLS ☑ ACS ☑
DATE: 09/13/2022

LPA

ARCHITECTURE ENGINEERING INTERIORS
LANDSCAPE ARCHITECTURE PLANNING

916-287-2400 Office

916-287-2401 Fax

LPADesignStudios.com

431 I Street, Suite 107
Sacramento, California 95814

LICENSED LANDSCAPE ARCHITECT
COURTNEY WRIGHT
SIGNATURE
3/24/2022
DATE
07/31/2023
RENEWAL DATE
STATE OF CALIFORNIA

This document and all other project documents, ideas, aesthetics and designs incorporated therein are instruments of service. All project documents are copyright protected, are the property of LPA, Inc. (LPA) and cannot be lawfully used in whole or in part for any project or purpose except as set forth in the contractual agreement between LPA and its Client. The unauthorized disclosure and/or use of the project documents (including the creation of derivative works), may give rise to liability for copyright infringement, unlawful disclosure, use or misappropriation of property rights held by LPA. The unauthorized use of the project documents will give rise to the recovery of monetary losses and damages including attorney fees and costs for which the unauthorized user will be held liable.
Project documents describe the design intent of the work and are not a representation of as-built or existing conditions. LPA is not responsible for any discrepancies between the project documents and the existing conditions.

DAVIS SR HIGH SCHOOL
AQUATICS CENTER
315 W 14TH ST., Davis, CA 95616

Developed for
DAVIS JOINT UNIFIED SCHOOL DISTRICT

Revision	Date

Submittal	Date
50% DD REVIEW	06/15/2021
100% DD SUBMITTAL	07/26/2021
50% CD REVIEW	10/08/2021
100% CD DSA SUBMITTAL	10/22/2021
DSA SUBMITTAL	3/24/2022

Job Number	1904413
Date Published	03/24/2022
Checked By	AW, JC
Scale	

CONSTRUCTION DETAILS

L5.02

IDENTIFICATION STAMP
DIV. OF THE STATE ARCHITECT
APP: 02-119490 INC:
REVIEWED FOR
SS ☑ FLS ☑ ACS ☑
DATE: 09/13/2022

TUBULAR STEEL CAP — 3"=1'-0" — 12

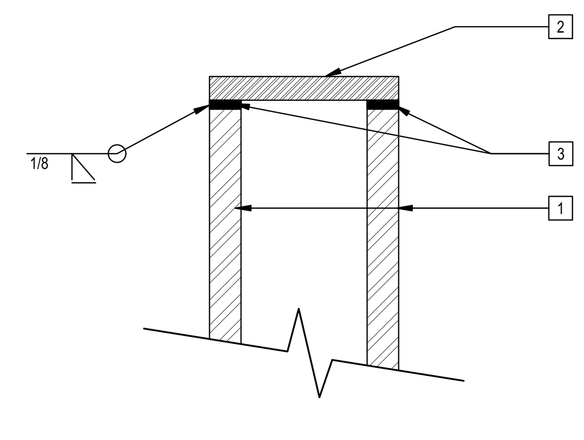

1 TUBE STEEL FENCE MEMBER
2 1/4" THICK STEEL PLATE
3 BUTT WELD

NOTES:
A. ALL COMPONENTS TO HAVE A SHOP APPLIED POLYURETHANE PAINT SYSTEM.
B. OPEN-MESH GATES WITH MAXIMUM LEAF SPAN OR ROLLING SECTION FOR ROLLING GATES OF 10'-0" & APEX HT. LESS THAN 8'-0" ABOVE LOWEST ADJACENT GRADE ARE EXEMPT FROM WELDING SPECIAL INSPECTION.

SWING GATE ENLARGEMENT — 3/4"=1'-0" — 04

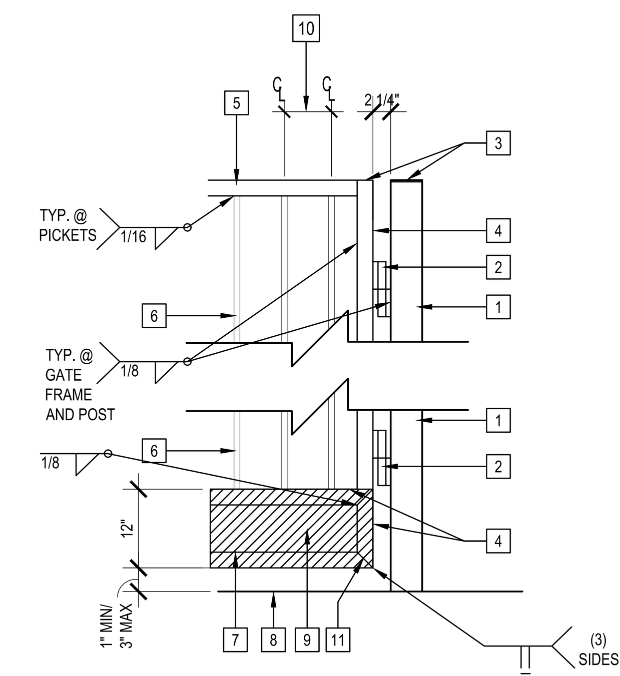

1 4" SQ. POST PER MANUFACTURER @ ALL ENDS & CHANGES IN DIRECTIONS. (UNLESS OTHERWISE NOTED @ GATES)
2 EXTRA HEAVY DUTY HINGES. FINISH, COATING, & COLOR TO MATCH GATE. (TOP, MIDDLE, AND BOTTOM)
3 WELDED TUBULAR STEEL CAP PER 12/-
4 1-3/4" SQ. TUBULAR STEEL SIDE FRAMES
5 1-3/4" SQ. TUBULAR STEEL TOP RAIL
6 1" SQ. TUBULAR STEEL FENCE PICKET PER MANUFACTURER
7 1-3/4" SQ. TUBULAR STEEL BOTTOM RAIL
8 FINISH SURFACE
9 STEEL GALVANIZED KICKPLATE PER 14/-
10 4-11/16" O.C. MAX EQUALLY SPACED
11 MITRE ALL CORNERS

NOTES:
A. ALL COMPONENTS TO HAVE A SHOP APPLIED POLYURETHANE PAINT SYSTEM.
B. ALL WELDS SHALL BE 1/8" CONTINUOUS FILLET OR FULL DEPTH PARTIAL PEN. BUTT WELD ALL JOINTS. GRIND SMOOTH PRIOR TO GALVANIZING.
C. FIELD GALVANIZE ALL FIELD WELDS.
D. ALL TUBULAR STEEL PICKETS & POSTS SHALL HAVE WELDED TUBULAR STEEL CAPS PER 12/-
E. ALL TUBULAR STEEL MEMBERS TO BE HSS 3/16" MIN. EXCEPT PICKETS. ALL PICKETS TO BE TUBE STEEL 14 GA.
F. OPEN-MESH GATES WITH MAXIMUM LEAF SPAN OR ROLLING SECTION FOR ROLLING GATES OF 10'-0" & APEX HT. LESS THAN 8'-0" ABOVE LOWEST ADJACENT GRADE ARE EXEMPT FROM WELDING SPECIAL INSPECTION.

TUBULAR STEEL DOUBLE GATE JAMB — 3" = 1'-0" — 15

1 PERFORATED METAL PANEL (WHERE PANIC HARDWARE OCCURS ONLY) SEE 09/-
2 PANIC HARDWARE VON DUPRIN SERIES 9824-F, 630 FINISH WITH SCHLAGE RIM CYLINDER 20-057 ICX 626 AND I.C. CORE 20-740 626
3 1" SQ. TUBE STEEL PICKETS. CENTERED ON TOP AND BOTTOM RAIL PER MANUFACTURER
4 1-3/4" TUBE STEEL BOTTOM RAIL
5 NOT USED
6 NOT USED
7 NOT USED
8 GATE HARDWARE, SEE 18/-

NOTE:
OPEN-MESH GATES WITH MAXIMUM LEAF SPAN OR ROLLING SECTION FOR ROLLING GATES OF 10'-0" & APEX HT. LESS THAN 8'-0" ABOVE LOWEST ADJACENT GRADE ARE EXEMPT FROM WELDING SPECIAL INSPECTION.

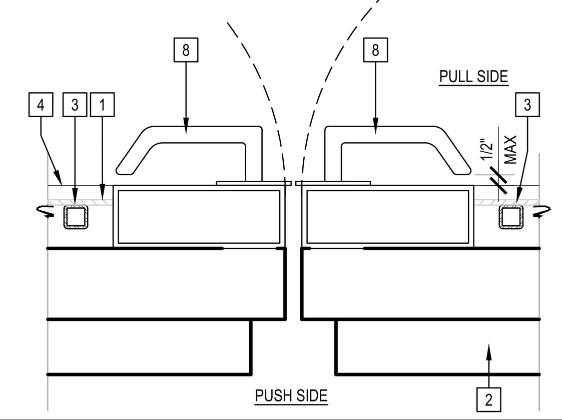

TUBULAR STEEL GATE JAMB — 3" = 1'-0" — 11

1 PERFORATED METAL PANEL (WHERE PANIC HARDWARE OCCURS ONLY) SEE 09/-
2 PANIC HARDWARE VON DUPRIN SERIES 9824-F, 630 FINISH WITH SCHLAGE RIM CYLINDER 20-057 ICX 626 AND I.C. CORE 20-740 626
3 1" SQ. TUBE STEEL PICKETS. CENTERED ON TOP AND BOTTOM RAIL PER MANUFACTURER
4 1-3/4" TUBE STEEL BOTTOM RAIL
5 4" TUBULAR STEEL FENCE POST
6 FULL HEIGHT ASTRAGAL ATTACHED TO GATE
7 NOT USED
8 GATE HARDWARE, SEE 18/-

NOTE:
OPEN-MESH GATES WITH MAXIMUM LEAF SPAN OR ROLLING SECTION FOR ROLLING GATES OF 10'-0" & APEX HT. LESS THAN 8'-0" ABOVE LOWEST ADJACENT GRADE ARE EXEMPT FROM WELDING SPECIAL INSPECTION.

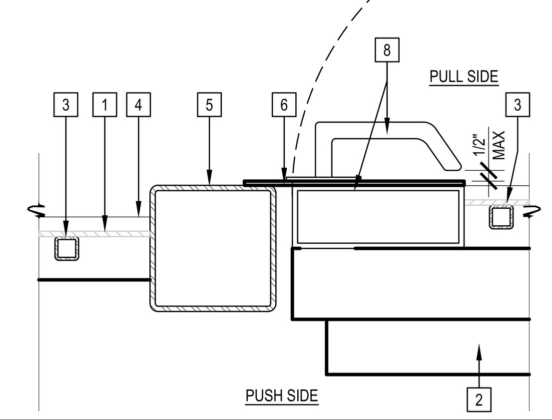

TUBULAR STEEL SINGLE PEDESTRIAN GATE — 1/2"=1'-0" — 03

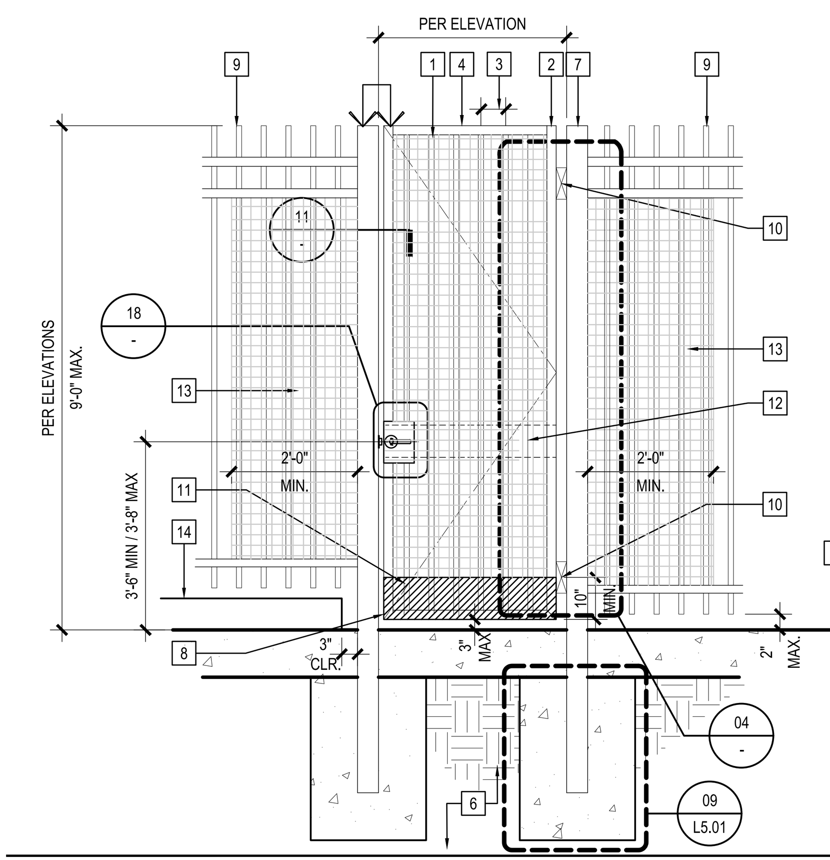

1 1" SQ. TUBULAR STEEL FENCE PICKET
2 1-3/4" SQ. TUBULAR STEEL SIDE FRAMES
3 4-11/16" O.C. EQUALLY SPACED
4 1-3/4" SQ. TUBULAR STEEL TOP RAIL
5 FINISH SURFACE
6 BASE MATERIAL & COMPACTED SUBGRADE PER 01/L5.01
7 4" SQ. TUBULAR STEEL POST FLAT CAP PER MANUFACTURER
8 1-3/4" SQ. TUBULAR STEEL BOTTOM RAIL
9 ADJACENT FENCING PER 01/-
10 #RF108W 90 DEG SELF CLOSING HINGE BY SURE CLOSE, 3X PER GATE. FINISH, COATING, AND COLOR TO MATCH GATE
11 12 GA. STEEL GALVANIZED KICKPLATE PER 14/-
12 PANIC HARDWARE ON INSIDE OF GATE. VON DUPRIN, SERIES 98 PER 10/-
13 CUSTOM PERFORATED SHEET METAL PER 09/-
14 MOW CURB WHERE OCCURS

NOTES:
A. ADDITIONAL INFORMATION PER 01/-
B. ALL COMPONENTS TO HAVE A SHOP APPLIED POLYURETHANE PAINT SYSTEM.
C. OPEN-MESH GATES WITH MAXIMUM LEAF SPAN OR ROLLING SECTION FOR ROLLING GATES OF 10'-0" & APEX HT. LESS THAN 8'-0" ABOVE LOWEST ADJACENT GRADE ARE EXEMPT FROM WELDING SPECIAL INSPECTION.

LOCKSET — 1 1/2"=1'-0" — 18

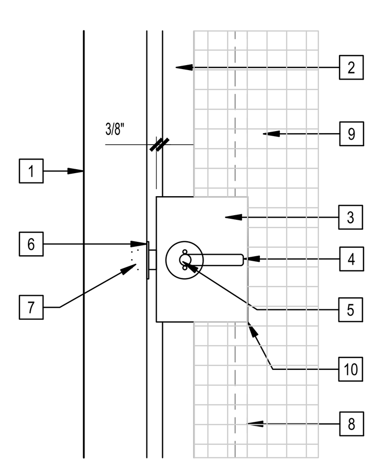

1 GATE POST/GATE FRAME
2 GATE FRAME
3 STEEL HOUSING. VERIFY EXACT SIZE OF FABRICATED STEEL HOUSING W/ MANUFACTURER OF HARDWARE
4 LATCH SET PER NOTE B.
5 LOCK CYLINDER
6 BOLT KEEPER TO MATCH GATE
7 LATCH BOLT
8 PICKETS BEHIND PERFORATED METAL
9 PERFORATED SHEET METAL
10 PERFORATED METAL TO MEET HOUSING WITH NO VISIBLE GAPS

NOTES:
A. STEEL HOUSING TO MATCH GATE FINISH AND COLOR.
B. LATCH SET MANUFACTURED BY SCHLAGE. MODEL NO. L9070T SPA 626. W/I.C. CORE 20-70740 626
C. HANDLE AND HOUSING TO BE EXTERIOR GRADE EXTRA HEAVY DUTY.
D. SHOP WELD HOUSING TO GATE PRIOR TO DELIVERY TO SITE.
E. LOCKS TO BE KEYED THE SAME. PROVIDE DUPLICATE KEYS FOR OWNER.
F. OPEN-MESH GATES WITH MAXIMUM LEAF SPAN OR ROLLING SECTION FOR ROLLING GATES OF 10'-0" & APEX HT. LESS THAN 8'-0" ABOVE LOWEST ADJACENT GRADE ARE EXEMPT FROM WELDING SPECIAL INSPECTION.

GATE KICKPLATE — 6" = 1'-0" — 14

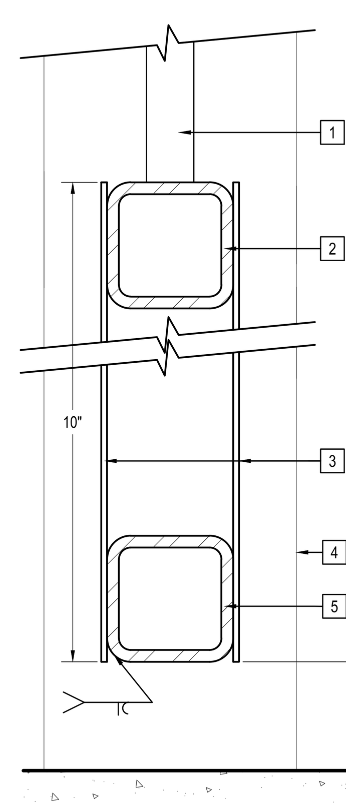

1 TUBULAR STEEL FENCE PICKET
2 TUBULAR STEEL RAIL FRAME
3 12 GA. STEEL GALVANIZED KICKPLATE. WELD TO FRAME TOP & BOTTOM. MOUNT FLUSH W/BOTTOM OF FRAME
4 TUBULAR STEEL GATE POST BEYOND
5 TUBULAR STEEL BOTTOM RAIL FRAME

NOTES:
A. ADDITIONAL NOTES PER 02/-
B. OPEN-MESH GATES WITH MAXIMUM LEAF SPAN OR ROLLING SECTION FOR ROLLING GATES OF 10'-0" & APEX HT. LESS THAN 8'-0" ABOVE LOWEST ADJACENT GRADE ARE EXEMPT FROM WELDING SPECIAL INSPECTION.

GATE PANIC HARDWARE — 6" = 1'-0" — 10

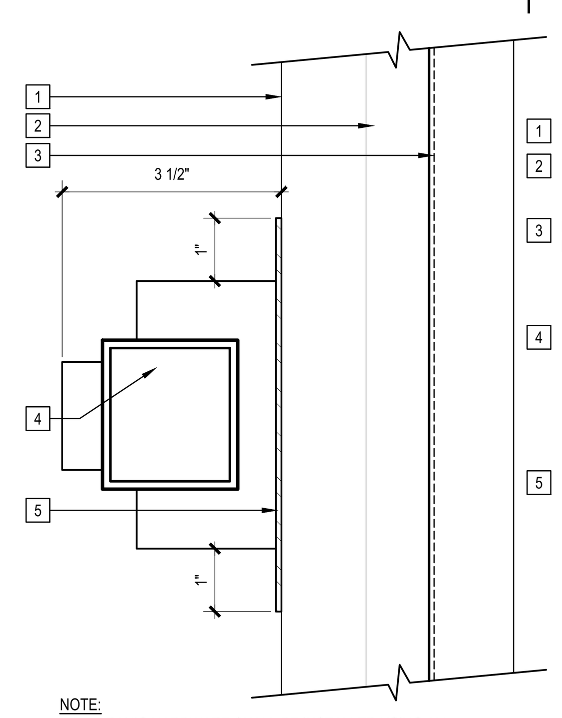

1 T.S. GATE FRAME.
2 T.S. PICKET
3 PERFORATED SHEET METAL. 09/-
4 PANIC HARDWARE. ATTACH TO STEEL PLATE PER MANUFACTURER'S RECOMMENDATIONS.
5 1/8" THK. STEEL MOUNTING PLATE. 3/16" FILLET WELD TO FRAME, UPPER AND LOWER EDGES TO EXTEND 1" BEYOND PANIC HARDWARE. (REFER TO MANUFACTURER'S SPECIFICATIONS) PAINT TO MATCH FENCE.

NOTE:
1. PANIC HARDWARE SHALL BE INSTALLED USING ALL AVAILABLE SCREWS/MOUNTING POINTS.
2. OPEN-MESH GATES WITH MAXIMUM LEAF SPAN OR ROLLING SECTION FOR ROLLING GATES OF 10'-0" & APEX HT. LESS THAN 8'-0" ABOVE LOWEST ADJACENT GRADE ARE EXEMPT FROM WELDING SPECIAL INSPECTION.

TUBULAR STEEL PEDESTRIAN GATE W/SINGLE PANIC HARDWARE & PERFORATED METAL — 1/2"=1'-0" — 02

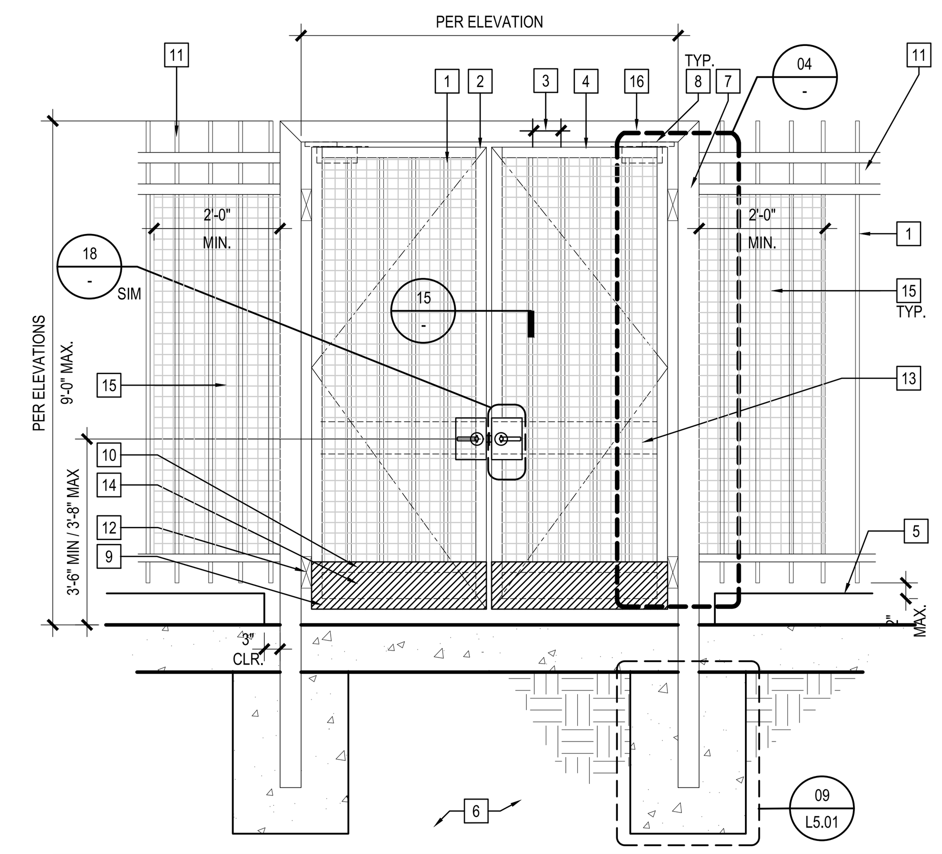

1 TUBULAR STEEL FENCE PICKET
2 1-3/4" TUBULAR STEEL SIDE FRAME
3 4-11/16" O.C. EQUALLY SPACED
4 1-3/4" TUBULAR STEEL TOP RAIL
5 MOW CURB, WHERE OCCURS
6 BASE MATERIAL & COMPACTED SUBGRADE PER 01/L5.01
7 4" TUBULAR STEEL POST
8 LCN SURFACE CLOSER #4040XP EDA, WITH MOUNTING PLATE. COLOR/FINISH TO MATCH GATE, MOUNTED ON INTERIOR SIDE OF GATE
9 1-3/4" TUBULAR STEEL BOTTOM RAIL
10 TUBULAR STEEL RAIL FRAME
11 ADJACENT FENCING PER 01/-
12 WELDED EXTRA HEAVY DUTY SELF CLOSING HINGES. FINISH, COATING & COLOR TO MATCH GATE
13 PANIC HARDWARE ON INSIDE OF GATE. VON DUPRIN, SERIES 9824-F PER 10/-
14 STEEL GALVANIZED KICKPLATE PER 14/-
15 CUSTOM PERFORATED SHEET METAL PER 09/-
16 4" TUBULAR STEEL HEADER, MITER TO GATE POSTS. 1" CLEARANCE ABOVE GATE OPENING

NOTES:
A. TUBULAR STEEL COMPONENT SIZING & ADDITIONAL NOTES PER 01/-
B. FOR GATE HARDWARE SEE 10/-
C. OPEN-MESH GATES WITH MAXIMUM LEAF SPAN OR ROLLING SECTION FOR ROLLING GATES OF 10'-0" & APEX HT. LESS THAN 8'-0" ABOVE LOWEST ADJACENT GRADE ARE EXEMPT FROM WELDING SPECIAL INSPECTION.

PERF METAL ATTACHMENT — 3" = 1'-0" — 09

1 18 GA. PERFORATED SHEET METAL, 3/16" DIA. 1/2" STAGGERED CENTERS. PROVIDE 1" CLEAR BORDER AROUND PERIMETER. CUSTOM AS PART OF THE PERFORATED SHEET
2 CONTINUOUS WELD AND GROUND SMOOTH AROUND GATE FRAME AND AT TUBE STEEL POSTS
3 SPOT WELD 12" OC. AT EACH PICKET
4 TUBE STEEL PICKETS. CENTERED ON TOP AND BOTTOM RAIL PER MANUFACTURER
5 TUBE STEEL GATE FRAME
6 TUBE STEEL BOTTOM RAIL
7 4" TUBULAR STEEL FENCE POST
7 HINGE PER 02/- 03/-

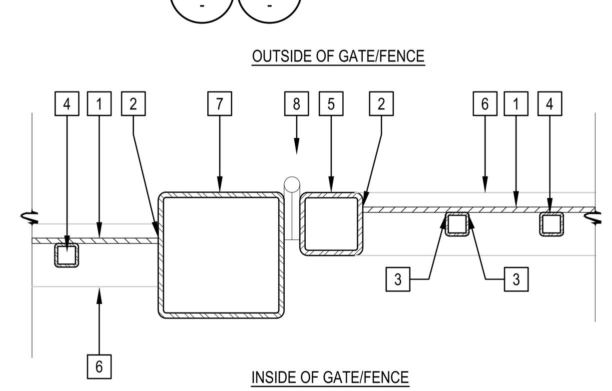

TUBULAR STEEL FENCE — 1/2"=1'-0" — 01

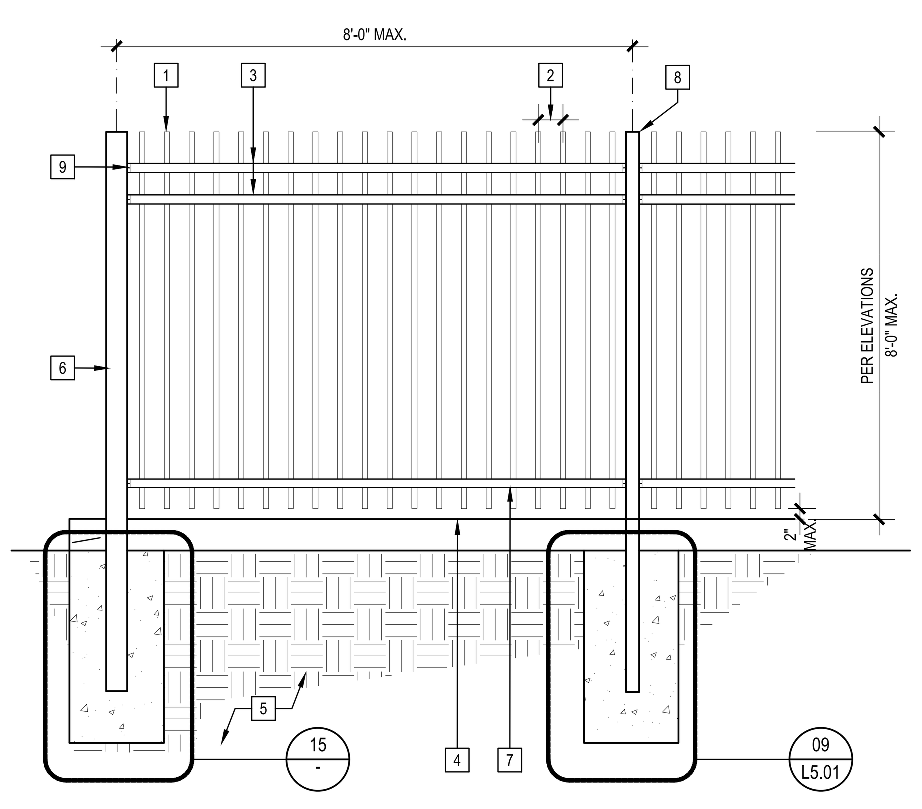

1 1" SQUARE 14 GAUGE TUBULAR STEEL FENCE PICKETS. PUNCH THROUGH TOP RAIL
2 4-11/16" O.C. EQUALLY SPACED
3 1-3/4" SQ. 14 GAUGE TUBULAR STEEL TOP RAIL
4 CONCRETE MOW CURB PER 09/L5.01
5 BASE MATERIAL AND COMPACTED SUBGRADE PER 01/L5.01
6 4" SQ. 11 GAUGE TUBULAR STEEL POST @ ALL ENDS AND CHANGES IN DIRECTIONS
7 1-3/4" SQ. 14 GAUGE TUBULAR STEEL BOTTOM RAIL
8 3" SQ. 1/4" TUBULAR STEEL LINE POST
9 FLAT MOUNT PANEL BRACKET PER MANUFACTURER

NOTES:
A. DESIGN BASED ON MONTAGE II 'GENESIS' 3 RAIL SYSTEM.
B. ALL COMPONENTS TO HAVE A SHOP APPLIED POLYURETHANE PAINT SYSTEM.
C. ALL TUBULAR STEEL PICKETS AND POSTS SHALL HAVE FLAT CAPS PER MANUFACTURER.
D. SEE ELEVATIONS FOR POST LOCATIONS
E. MAINTAIN POSTS & ALL PICKETS VERTICAL ON SLOPED AREAS.
F. ALL PICKETS, RAILS, POSTS, AND HARDWARE SUPPLIED BY MANUFACTURER.
G. ALL PICKETS, RAILS, AND POSTS PRE-CUT TO SPECIFIED LENGTHS AND ALL RAILS PRE-PUNCHED TO ACCEPT PICKETS.
H. GROMMETS INSERTED INTO PRE-PUNCHED HOLES IN RAILS AND PICKETS INSERTED THROUGH GROMMETS PER MANUFACTURER'S SPECIFICATIONS.
I. ATTACH PICKETS TO RAILS PER MANUFACTURER.
J. ALL TUBULAR STEEL PICKETS AND POSTS SHALL HAVE WELDED STEEL CAP PER 12/-

LPA
ARCHITECTURE ENGINEERING INTERIORS LANDSCAPE ARCHITECTURE PLANNING
916-287-2400 Office
916-287-2401 Fax
LPADesignStudios.com
431 I Street, Suite 107
Sacramento, California 95814

This document and all other project documents, ideas, aesthetics and designs incorporated therein are instruments of service. All project documents are copyright protected, are the property of LPA, Inc. (LPA) and cannot be lawfully used in whole or in part for any project or purpose except as set forth in the contractual agreement between LPA and its Client. The unauthorized disclosure and/or use of the project documents (including the creation of derivative works), may give rise to liability for copyright infringement, unlawful disclosure, use or misappropriation of property rights held by LPA. The unauthorized use of the project documents will give rise to the recovery of monetary losses and damages including attorney fees and costs for which the unauthorized user will be held liable. Project documents describe the design intent of the work and are not a representation of as-built or existing conditions. LPA is not responsible for any discrepancies between the project documents and the existing conditions.

DAVIS SR HIGH SCHOOL AQUATICS CENTER
315 W 14TH ST., Davis, CA 95616
Developed for
DAVIS JOINT UNIFIED SCHOOL DISTRICT

Revision	Date

Submittal	Date
50% DD REVIEW	06/15/2021
100% DD SUBMITTAL	07/26/2021
50% CD REVIEW	10/08/2021
100% CD DSA SUBMITTAL	10/22/2021
DSA SUBMITTAL	03/24/2022

Job Number	1904413
Date Published	10/22/2021
Checked By	AW, JC
Scale	

CONSTRUCTION DETAILS

L5.03

IDENTIFICATION STAMP
DIV. OF THE STATE ARCHITECT
APP: 02-119490 INC:
REVIEWED FOR
SS ☑ FLS ☑ ACS ☑
DATE: 09/13/2022

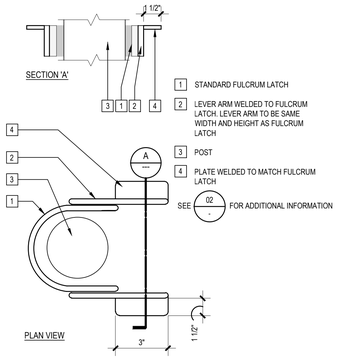

1 STANDARD FULCRUM LATCH
2 LEVER ARM WELDED TO FULCRUM LATCH. LEVER ARM TO BE SAME WIDTH AND HEIGHT AS FULCRUM LATCH
3 POST
4 PLATE WELDED TO MATCH FULCRUM LATCH

SEE 02 FOR ADDITIONAL INFORMATION

MODIFIED FULCRUM LATCH | NTS | 11

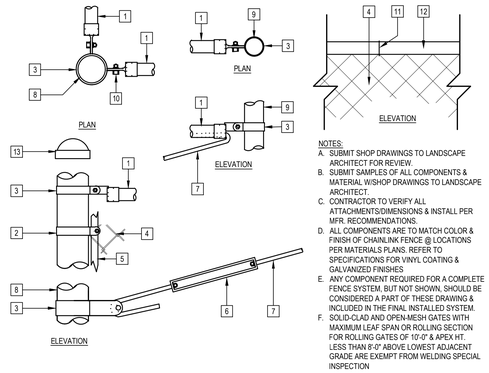

NOTES:
A. SUBMIT SHOP DRAWINGS TO LANDSCAPE ARCHITECT FOR REVIEW.
B. SUBMIT SAMPLES OF ALL COMPONENTS & MATERIAL W/SHOP DRAWINGS TO LANDSCAPE ARCHITECT.
C. CONTRACTOR TO VERIFY ALL ATTACHMENTS/DIMENSIONS & INSTALL PER MFR. RECOMMENDATIONS.
D. ALL COMPONENTS ARE TO MATCH COLOR & FINISH OF CHAINLINK FENCE @ LOCATIONS PER MATERIALS PLANS. REFER TO SPECIFICATIONS FOR VINYL COATING & GALVANIZED FINISHES
E. ANY COMPONENT REQUIRED FOR A COMPLETE FENCE SYSTEM, BUT NOT SHOWN, SHOULD BE CONSIDERED A PART OF THESE DRAWING & INCLUDED IN THE FINAL INSTALLED SYSTEM.
F. SOLID-CLAD AND OPEN-MESH GATES WITH MAXIMUM LEAF SPAN OR ROLLING SECTION FOR ROLLING GATES OF 10'-0" & APEX HT. LESS THAN 8'-0" ABOVE LOWEST ADJACENT GRADE ARE EXEMPT FROM WELDING SPECIAL INSPECTION

1 BRACE RAIL
2 TENSION CLIP/BAND
3 BRACE BAND
4 CHAINLINK MESH PER MATERIALS PLAN. REFER TO KEYNOTE LEGEND FOR FINISH
5 TENSION FLAT BAR
6 TURNBUCKLE
7 TRUSS ROD
8 CORNER OR END POST
9 LINE POST
10 BOLT & NUT. VERIFY W/MFR.
11 RAIL TIE WIRE
12 TOP RAIL
13 DOME POST CAP. SIZE TO MATCH POST

CHAINLINK CONNECTIONS | 1 1/2" = 1'-0" | 03

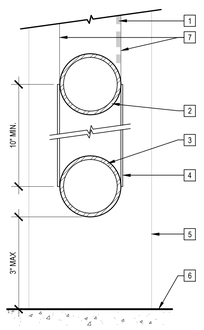

1 CHAINLINK FABRIC
2 CHAINLINK GATE FRAME RAIL
3 CHAINLINK GATE FRAME BOTTOM RAIL
4 12 GA. STEEL GALVANIZED KICKPLATE (BOTH SIDES). WELD TO FRAME TOPE AND BOTTOM. COUNT FLUSH W/ BOTTOM OF FRAME.
5 CHAINLINK GATE POST (BEYOND)
6 FINISH SURFACE
7 GATE FRAME- SIDE RAIL

CHAINLINK GATE KICKPLATE | 6" = 1'-0" | 10

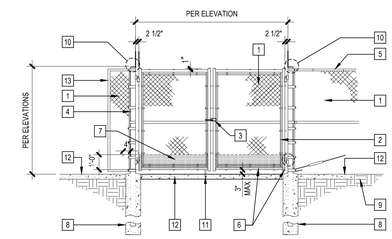

NOTES:
1. SUBMIT SHOP DRAWINGS TO LANDSCAPE ARCHITECTS FOR REVIEW.
2. ALL FENCING & COMPONENTS TO BE HOT DIPPED GALVANIZED STEEL WITH BLACK VINYL COATING.
3. ALL WELDS TO BE GROUND SMOOTH.
4. PROVIDE A LOCKSET AS REQUIRED BY SCHOOL DISTRICT.
5. CONCRETE BATCH PLANT INSPECTION IS NOT REQUIRED
6. SOLID-CLAD & OPEN-MESH GATES W/MAXIMUM LEAF SPAN OR ROLLING SECTION FOR ROLLING GATES OF 10'-0" & APEX HT. LESS THAN 8'-0" ABOVE LOWEST ADJACENT GRADE ARE EXEMPT FROM WELDING SPECIAL INSPECTION.

1 2" - 9 GAUGE CHAIN LINK FENCING FABRIC.
2 TENSION FLAT BAR. THREAD TENSION BAR TO CHAIN LINK AND ATTACH TO POST WITH TENSION CLIPS EACH SIDE OF GATE PER MFG. RECOMMENDATIONS.
3 FULCRUM LATCH 11
4 4" O.D. SCH. 40 POST EACH SIDE OF GATE.
5 ADJACENT CHAIN LINK FENCE. 01
6 1.90" SCH. 40 GATE FRAME. ALL JOINTS WELDED TO MAKE A SOLID FRAME.
7 10" MIN. HEIGHT GALVANIZED STEEL KICKPLATE, 12 GAUGE, BOTH SIDES OF GATE. WELD TO GATE FRAME. MOUNT FLUSH WITH BOTTOM OF FRAME. 10
8 CONCRETE POST FOOTING. 09
9 FINISH GRADE.
10 END POST CAP TO MATCH END POST. 03
11 1-3/8" DIA. PLUNGER ROD W/ 2" STAINLESS STEEL SLEEVE
12 AC PAVING PER LAYOUT AND MATERIALS PLAN.
13 1.66 " O.D. SCH. 40 FRAME INFILL PANEL AT BUILDING PER ELEVATION

DOUBLE CHAINLINK GATE | 1/4" = 1'-0" | 02

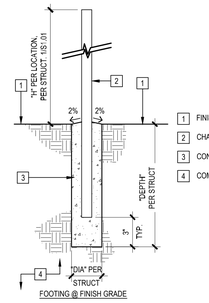

1 FINISH SURFACE/FINISH GRADE
2 CHAINLINK FENCE POST
3 CONCRETE CAISSON 1 / S1.01
4 COMPACTED SUBGRADE PER 01 / L5.01

CONC. FOOTING FOR CHAINLINK FENCE | 1/2" = 1'-0" | 09

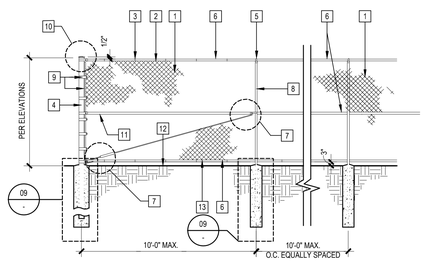

NOTES:
A. SUBMIT SHOP DRAWINGS TO LANDSCAPE ARCHITECT FOR REVIEW.
B. ALL FENCING & COMPONENTS TO BE HOT DIPPED GALVANIZED STEEL WITH BLACK VINYL COATING.
C. ALL WELDS TO BE GROUND SMOOTH.
D. CONCRETE BATCH PLANT INSPECTION IS NOT REQUIRED.
E. OPEN-MESH GATES WITH MAXIMUM LEAF SPAN OR ROLLING SECTION FOR ROLLING GATES OF 10'-0" & APEX HT. LESS THAN 8'-0" ABOVE LOWEST ADJACENT GRADE ARE EXEMPT FROM WELDING SPECIAL INSPECTION.

1 2" - 9 GAUGE CHAINLINK FENCE PER MATERIALS PLAN. REFER TO KEYNOTE LEGEND FOR FINISH
2 TOP SELVAGE KNUCKLED CHAIN LINK FABRIC
3 RAIL TIE WIRE. ATTACH TO TOP RAIL SINGLE WRAP 9 GAUGE @ 24" O.C. (NOTE: CHAINLINK TO BE ATTACHED BELOW TOP RAIL)
4 4.00" O.D. SCH. 40 CORNER OR END POST
5 LINE POST TOP
6 1.66 " O.D. SCH. 40 TOP, BOTTOM AND INTERMEDIATE RAIL (INTERMEDIATE RAIL NOT REQUIRED AT FENCE 6'-0" HIGH AND UNDER)
7 ADJUSTABLE TRUSS ROD W/TURNBUCKLE
8 3" O.D. SCHEDULE 40 PIPE
9 TENSION FLAT BAR. THREAD TENSION BAR TO CHAINLINK & ATTACH TO END POST W/TENSION CLIPS PER MANUFACTURER RECOMMENDATIONS.
10 END POST CAP TO MATCH END POST 03
11 1.66 " O.D. SCH.40 INTERMEDIATE RAIL @ ENDS, CORNER MODULES & CHANGE OF DIRECTIONS
12 FINISH GRADE
13 BOTTOM KNUCKLED CHAINLINK FABRIC

CHAINLINK FENCE | 1/4" = 1'-0" | 01

LPA
ARCHITECTURE ENGINEERING INTERIORS
LANDSCAPE ARCHITECTURE PLANNING
916-287-2400 Office
916-287-2401 Fax
LPADesignStudios.com
431 I Street, Suite 107
Sacramento, California 95814

LICENSED LANDSCAPE ARCHITECT
JOHN COURTNEY
SIGNATURE
03/24/2022
DATE
07/31/2023
EXPIRATION DATE
STATE OF CALIFORNIA

This document and all other project documents, ideas, aesthetics and designs incorporated therein are instruments of service. All project documents are copyright protected, are the property of LPA, Inc. (LPA) and cannot be lawfully used in whole or in part for any project or purpose except as set forth in the contractual agreement between LPA and its Client. The unauthorized disclosure and/or use of the project documents (including the creation of derivative works), may give rise to liability for copyright infringement, unlawful disclosure, use or misappropriation of property rights held by LPA. The unauthorized use of the project documents will give rise to the recovery of monetary losses and damages including attorney fees and costs for which the unauthorized user will be held liable.
Project documents describe the design intent of the work and are not a representation of as-built or existing conditions. LPA is not responsible for any discrepancies between the project documents and the existing conditions.

DAVIS SR HIGH SCHOOL
AQUATICS CENTER
315 W 14TH ST., Davis, CA 95616

Developed for
DAVIS JOINT UNIFIED SCHOOL DISTRICT

Revision	Date

Submittal	Date
50% DD REVIEW	06/15/2021
100% DD SUBMITTAL	07/26/2021
50% CD REVIEW	10/08/2021
100% CD DSA SUBMITTAL	10/22/2021
DSA SUBMITTAL	3/24/2022

Job Number	1904413
Date Published	03/24/2022
Checked By	AW, JC
Scale	

CONSTRUCTION DETAILS

L5.04

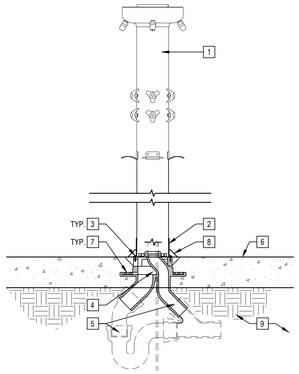

1. COLUMN SHOWER PER MATERIALS PLAN
2. COLUMN FLANGE PER MANUF
3. ANCHOR BOLTS PER MANUF
4. TYPE "H" DRAIN PER MANUF, EMBEDED INTO SLAB, PIPING TO BE ROUGHED IN PRIOR TO POURING POOL DECK
5. PIPING CONNECTIONS PER CIVIL AND PLUMBING
6. POOL DECK FINISH SURFACE, SLOPE TO DOME GRATE DRAIN
7. GRAVEL OR OTHER POROUS MATERIAL TO ALLOW SEEPAGE TO REACH WEEP HOLES
8. DOME GRATE DRAIN
9. BASE MATERIAL AND COMPACTED SUBGRADE

NOTES:
A. POSITION DRAIN SO TOP OF DISPOSABLE WASHER IS FLUSH WITH FINISH SURFACE
B. LEVEL TOP OF DRAIN SO COLUMN WILL INSTALL PLUMB
C. MIN. 2" OF CONCRETE FOR SOLID ANCHORAGE

SHOWER BASE EMBEDMENT | 1" = 1'-0" - | 08

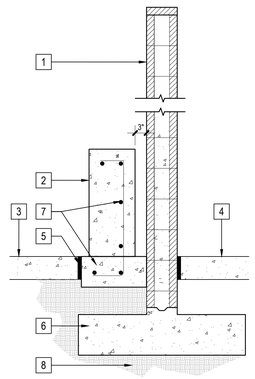

1. CMU WALL PER (01 / L5.02)
2. TOMBSTONE PER (2 / AQ1.11)
3. POOL DECK FINISH SURFACE
4. ENCLOSURE INTERIOR FINISH SURFACE
5. EXPANSION JOINT
6. CMU WALL STEEL REINFORCEMENT AND CONCRETE FOOTING PER (01 / L5.02)
7. TOMBSTONE STEEL REINFORCEMENT AND CONCRETE FOOTING PER (2 / AQ1.11)
8. COMPACTED SUBGRADE PER GEOTECHNICAL REPORT

TOMBSTONE AT CMU WALL | 3/4" = 1'-0" - | 15

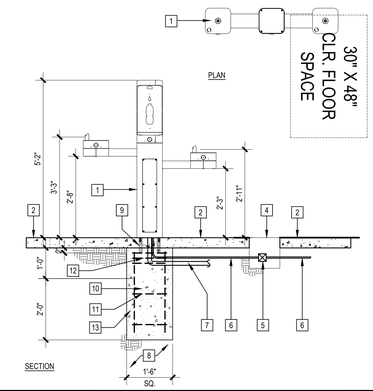

1. DRINKING FOUNTAIN WITH BOTTLE FILLER PER SITE FURNISHINGS LEGEND SHEET L0.01
2. CONCRETE PAVING PER MATERIALS PLAN. REFER TO KEYNOTE LEGEND FOR COLOR & FINISH.
3. NOT USED
4. REMOTELY LOCATE CONCRETE VALVE BOX. LOCATE IN POOL DECK TO BE DETERMINED IN THE FIELD BY THE LANDSCAPE ARCHITECT.
5. CONTROL VALVE. SIZE PER MANUFACTURER.
6. 1/2" REINFORCED NYLOBROID TUBING. CONNECT TO STUB OUT PER CIVIL UTILITY PLANS.
7. 1 1/2" PVC DRAINLINE. CONNECT TO DRAINLINE PER CIVIL UTILITY PLANS.
8. COMPACTED SUBGRADE PER (01 / L5.01)
9. FOUNTAIN ANCHORS, EMBEDDED INTO PAVEMENT.
10. CONCRETE FOOTING
11. #3 CLOSED TIES @ 12" O.C.
12. (3) #3 CLOSED TIES WITHIN TOP 5" OF CAISSON
13. (4) #3 VERTICAL BARS

DRINKING FOUNTAIN | 1/2"=1'-0" SAME | 07

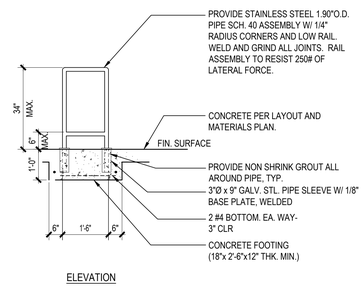

ELEVATION

NOTES:
1. CONCRETE BATCH PLANT INSPECTION IS NOT REQUIRED.

DETECTABLE SIDE RAIL | 1/2" = 1'-0" - | 03

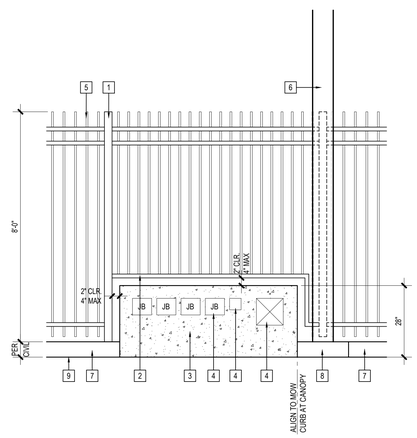

C. ELEVATION AT CANOPY COLUMN

1. TUBE STEEL FENCE POST PER (01 / L5.03)
2. CUSTOM TUBE STEEL BOTTOM RAIL TO WRAP AROUND TOMBSTONE. SIZE PER (01 / L5.03)
3. TOMBSTONE REINFORCEMENT AND FOOTING PER AQUATICS PLANS (2 / AQ1.11)
4. JUNCTION BOX/HOSE BIB/TIMING SYSTEMS PER REFER TO AQUATICS PLANS FOR LOCATIONS (2 / AQ1.11) (3 / AQ1.11) (5 / AQ1.12)
5. ADJACENT FENCE PANEL PER (01 / L5.03)
6. CANOPY COLUMN
7. MOW CURB AT FENCE
8. MOW CURB AT CANOPY COLUMN
9. FINISH SURFACE

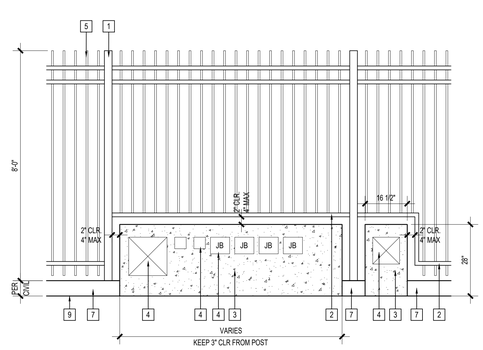

A. TYPICAL ELEVATION BETWEEN FENCE POST

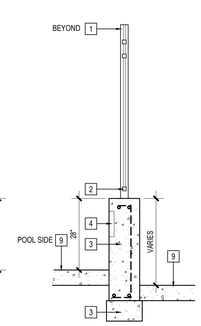

B. TYPICAL SECTION

TOMBSTONE CONDITIONS | 1/2"=1'-0" - | 13

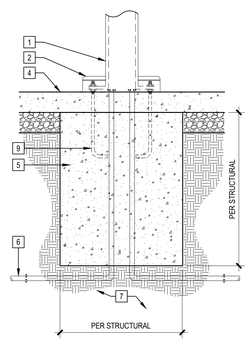

A. LIGHT POLE BASE IN PAVING

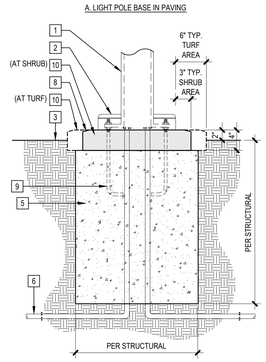

B. LIGHT POLE BASE IN PLANTING

1. LIGHT POLE PER ELECTRICAL PLANS.
2. POLE BASE COVER. REFER TO ELECTRICAL PLANS FOR ADDITIONAL INFORMATION.
3. FINISH GRADE @ PLANTING.
4. FINISHED SURFACE PER MATERIALS AND LAYOUT PLAN
5. C.I.P. CONCRETE CAISSON DIMENSIONS AND REINFORCING PER (04 / S1.01) STRUCTURAL
6. CONDUIT & STUB OUT PER ELECTRICAL PLANS.
7. BASE MATERIAL & COMPACTED SUBGRADE PER THE GEOTECHNICAL REPORT.
8. ½" RADIUS TYPICAL.
9. BASE PLATE AND ANCHOR BOLTS PER POLE MANUFACTURER SPEC'S.
10. AT PLANTING CONDITION - TOP 4" OF CONCRETE FOOTING TO BE SQUARE AND TRANSITION TO CIRCULAR BASE.

POLE LIGHT FOOTING | 1" = 1'-0" SCALE | 09

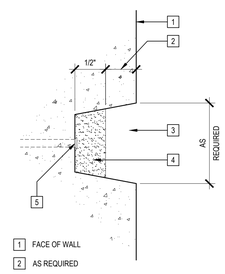

1. FACE OF WALL
2. AS REQUIRED
3. VOID FROM SNAP TIE CONE
4. QUICK SET HYDRAULIC NON-SHRINK CEMENT
5. SNAP TIE - CUT FLUSH WITH BACK OF CONE VOID

NOTES:
A. ALL SNAP TIES TO BE ALIGNED VERTICALLY AND HORIZONTALLY ALONG THEIR CENTERLINES.
B. CONTRACTOR TO SUBMIT SHOP DRAWINGS OF SNAP TIE LAYOUT TO LANDSCAPE ARCHITECT PRIOR TO CONSTRUCTION.

INFILL AT SNAP TIE VOID | FULL - | 06

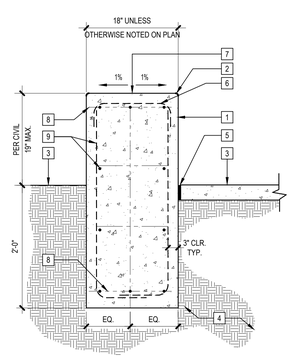

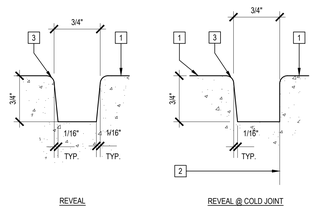

1. CONCRETE WALL PER MATERIALS PLAN.
2. COLD JOINT.
3. 1/8" TOOLED/STONED CORNERS & EDGES.

NOTES:
A. PROVIDE REVEAL @ ALL COLD JOINTS.
B. REVEAL SHOULD BE CONTINUOUS ON SIDES & TOP OF WALL, UNLESS OTHERWISE NOTED ON PLAN OR ELEVATION.
C. REFER TO PLANS & ELEVATIONS FOR JOINT SIZE & LOCATION.
D. ALIGN ALL FORM JOINTS W/REVEALS. CUSTOM CUT FORMS AS REQUIRED.

CONCRETE WALL REVEALS | FULL SAME | 02

1. CONCRETE FREE-STANDING WALL PER MATERIALS PLAN. REFER TO KEYNOTE LEGEND FOR COLOR & FINISH
2. 1/8" EASED EDGE RADIUS, TYP. ALL EDGES. NO CHAMFERS
3. FINISH SURFACE/FINISH GRADE
4. OVER-EXCAVATION, SUBGRADE SCARIFICATION/COMPACTION SHALL BE PER GEOTECHNICAL REPORT
5. EXPANSION JOINT PER (02 / L5.01)
6. #4 @ 12" O.C.
7. TOP OF WALL PER CIVIL GRADING PLAN
8. (3) #5 CONTINUOUS AT TOP AND BOTTOM
9. #4 @ 12" O.C. EACH WAY AND EACH FACE

NOTES:
A. REVEAL (02 / -)
B. REFER TO PLANS & ELEVATIONS FOR LOCATION OF JOINTS.
C. ALL FORM SEAMS ARE TO ALIGN WITH REVEALS SHOWN ON LAYOUT PLANS. PROVIDE CUSTOM FORM BOARDS AS REQUIRED.
D. PROVIDE PERMANENT NON-SACRIFICIAL ANTI-GRAFFITI COATING ON ALL EXPOSED WALL SURFACES (SEE SPECS)
E. CONCRETE BATCH PLANT INSPECTION IS NOT REQUIRED
F. INFILL AT SNAP TIE VOID PER (06 / -)
G. REFER TO S6.01 FOR REINFORCEMENT NOTES AND DETAILS; HOOKS DETAIL 3, LAP LENGTHS DETAIL 8, REINFORCE AT CORNERS AND INTERSECTIONS DETAIL 5

CONCRETE FREE-STANDING WALL | 1" = 1'-0" - | 01

IDENTIFICATION STAMP
DIV. OF THE STATE ARCHITECT
APP: 02-119490 INC:
REVIEWED FOR
SS ☑ FLS ☑ ACS ☑
DATE: 09/13/2022

LPA
ARCHITECTURE ENGINEERING INTERIORS
LANDSCAPE ARCHITECTURE PLANNING

916-287-2400 Office
916-287-2401 Fax
LPADesignStudios.com
431 I Street, Suite 107
Sacramento, California 95814

LICENSED LANDSCAPE ARCHITECT
JON CHRISTIAN WAYNE
LANDSCAPE ARCHITECT
STATE OF CALIFORNIA

This document and all other project documents, ideas, aesthetics and designs incorporated therein are instruments of service. All project documents are copyright protected, are the property of LPA, Inc. (LPA) and cannot be lawfully used in whole or in part for any project or purpose except as set forth in the contractual agreement between LPA and its Client. The unauthorized disclosure and/or use of the project documents (including the creation of derivative works), may give rise to liability for copyright infringement, unlawful disclosure, use or misappropriation of property rights held by LPA. The unauthorized use of the project documents will give rise to the recovery of monetary losses and damages including attorney fees and costs for which the unauthorized user will be held liable.
Project documents describe the design intent of the work and are not a representation of as-built or existing conditions. LPA is not responsible for any discrepancies between the project documents and the existing conditions.

DAVIS SR HIGH SCHOOL AQUATICS CENTER
315 W 14TH ST., Davis, CA 95616

Developed for
DAVIS JOINT UNIFIED SCHOOL DISTRICT

Revision	Date

Submittal	Date
50% DD REVIEW	06/15/2021
100% DD SUBMITTAL	07/28/2021
50% CD REVIEW	10/08/2021
100% CD DSA SUBMITTAL	10/22/2021
DSA SUBMITTAL	03/24/2022

Job Number	1904413
Date Published	10/22/2021
Checked By	AW, JC
Scale	

CONSTRUCTION DETAILS

L5.05

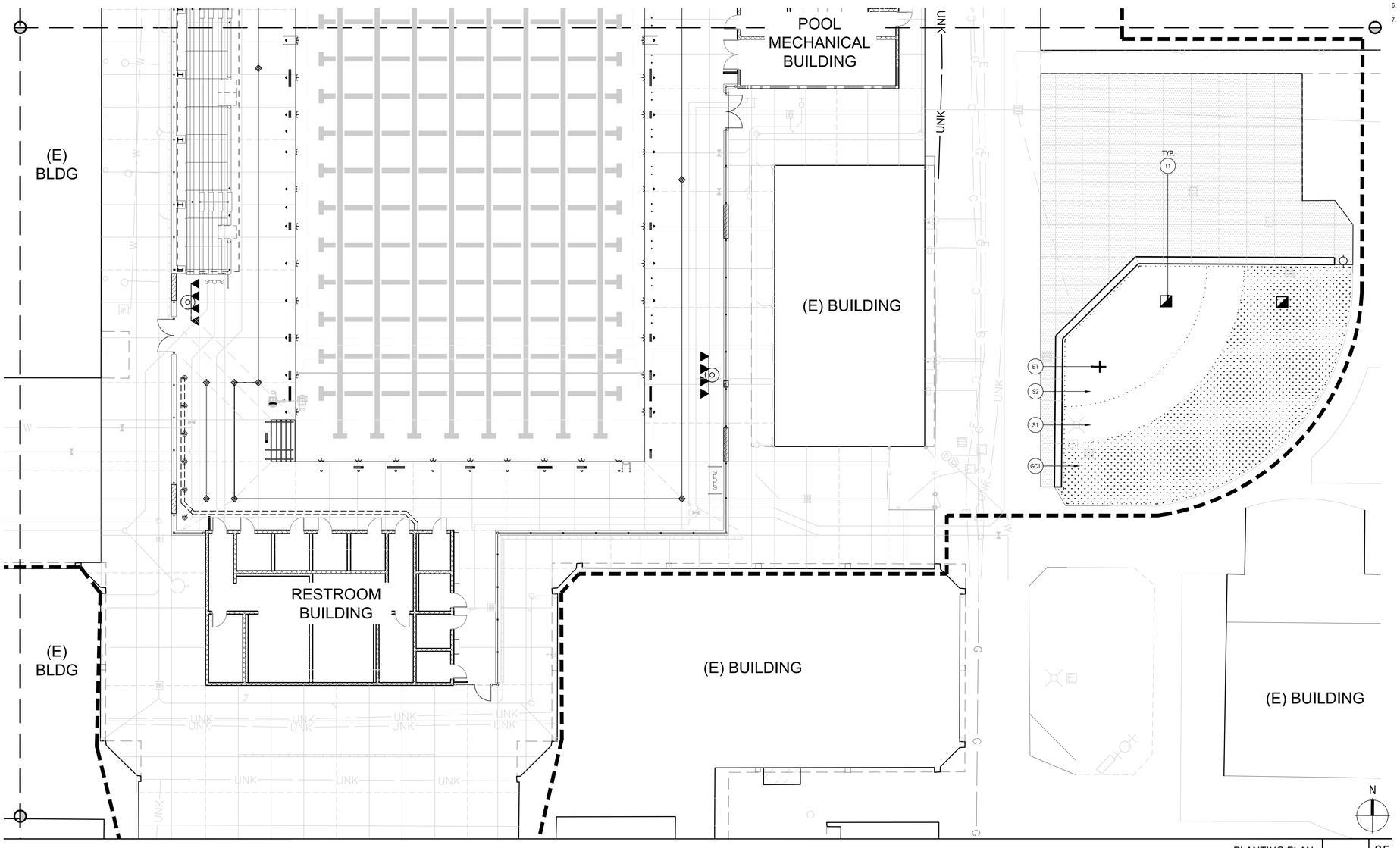

PLANTING PLAN | 1" = 10'-0" | 05

PLANTING LEGEND

TREE LIST

(NCN.)- NO COMMON NAME (*)- UNLESS NOTED ON PLAN

REF.	QTY.	SYM.	DESCRIPTION	SIZE/ SPACING	COMMENTS/ DETAIL
T1	2		PLATANUS ACERIFOLIA 'COLUMBIA'/ LONDON PLANE TREE	48" BOX/ AS SHOWN	01/ L7.02
ET	1		EXISTING TREE, PROTECT IN PLACE		

SHRUB LIST

REF.	QTY.	SYM.	DESCRIPTION	SIZE/ SPACING	COMMENTS/ DETAIL
S1	AS REQ'D		DIANELLA CAERULEA 'CASSA BLUE'/ BLUE FLAX LILY	5 GAL./ 36" O.C.	03/ L7.02
S2	AS REQ'D		RHAMNUS CALIFORNICA 'MOUND SAN BRUNO'/ SAN BRUNO COFFEEBERRY	5 GAL./ 48" O.C.	03/ L7.02

GROUNDCOVER LIST

REF.	QTY.	SYM.	DESCRIPTION	SIZE/ SPACING	COMMENTS/ DETAIL
GC1	AS REQ'D		NATIVE MOW FREE SOD BY DELTA BLUEGRASS	SOD	SEE SPECS

NOTES:

1. CONTRACTOR IS TO VERIFY ALL PROPERTY LINES/LIMITS OF WORK AND ADJUST ALL PLANTING AND IRRIGATION ACCORDINGLY. NOTIFY OWNER'S AUTHORIZED REPRESENTATIVE OF ANY DISCREPANCIES PRIOR TO COMMENCING WORK.
2. CONTRACTOR MUST REPLACE ANY PLANT MATERIAL DAMAGED WITH 'LIKE' KIND, ON ANY ADJACENT PROPERTIES DUE TO GRADING OR CONSTRUCTION TO THE SATISFACTION OF THE LANDSCAPE ARCHITECT AND OWNER'S REPRESENTATIVE AT NO ADDITIONAL COST TO THE OWNER.
3. SEE PLANTING NOTES ON SHEET L0.1
4. THE CONTRACTOR MUST FAMILIARIZE HIMSELF WITH THE EXISTING IRRIGATION, GRADING, AND PLANTING OF THIS PROPERTY AND ADJACENT PROPERTIES. ANY DAMAGE OR ADJUSTMENTS REQUIRED INCLUDING REPLACING OR RELOCATING IRRIGATION LINES, HEADS, VALVES, WIRES OR ANY UTILITY THAT OCCURS ON THE PARCEL DUE TO THE GRADING AND CONSTRUCTION OF THIS PROJECT IS THE SOLE RESPONSIBILITY OF THE CONTRACTOR AND SHALL BE PERFORMED AT NO ADDITIONAL COST TO THE OWNER. THE OWNER'S REP. MUST REVIEW ANY REQUIRED MODIFICATIONS TO THESE AREAS PRIOR TO COMMENCING WORK. THE CONTRACTOR MUST NOTIFY THE OWNER'S AUTHORIZED REP. OF THESE CONDITIONS OR ANY DISCREPANCIES PRIOR TO COMMENCING WORK. TYP. ENTIRE SITE.
5. PROTECT ALL (E) TREES ON SITE WITHIN L.O.W. & OUTSIDE L.O.W. CONTRACTOR TO REPLACE ANY (E) TREES AND PLANT MATERIAL DAMAGED DURING CONSTRUCTION.
6. WASH ALL TREES WEEKLY AT HORTICULTURALLY APPROPRIATE TIME FOR EACH SPECIES.
7. MAINTAIN AND HAND WATER ALL EXISTING PLANT MATERIAL NOT INDICATED IN THE DEMOLITION PLAN AS BEING REMOVED, DURING THE ENTIRE COURSE OF CONSTRUCTION AND MAINTENANCE.

IDENTIFICATION STAMP
DIV. OF THE STATE ARCHITECT
APP: 02-119490 INC:
REVIEWED FOR
SS ☑ FLS ☑ ACS ☑
DATE: 09/13/2022

LPA
ARCHITECTURE ENGINEERING INTERIORS
LANDSCAPE ARCHITECTURE PLANNING

916-287-2400 Office
916-287-2401 Fax
LPADesignStudios.com
431 I Street, Suite 107
Sacramento, California 95814

LICENSED LANDSCAPE ARCHITECT
AARON WEITNAUER
LICENSE NUMBER 5494
SIGNATURE
EXPIRATION DATE 12/31/2022
STATE OF CALIFORNIA

This document and all other project documents, ideas, aesthetics and designs incorporated therein are instruments of service. All project documents are copyright protected, are the property of LPA, Inc. (LPA) and cannot be lawfully used in whole or in part for any project or purpose except as set forth in the contractual agreement between LPA and its Client. The unauthorized disclosure and/or use of the project documents (including the creation of derivative works), may give rise to liability for copyright infringement, unlawful disclosure, use or misappropriation of property rights held by LPA. The unauthorized use of the project documents will give rise to the recovery of monetary losses and damages including attorney fees and costs for which the unauthorized user will be held liable. Project documents describe the design intent of the work and are not a representation of as-built or existing conditions. LPA is not responsible for any discrepancies between the project documents and the existing conditions.

DAVIS SR HIGH SCHOOL
AQUATICS CENTER
315 W 14TH ST., Davis, CA 95616

Developed for
DAVIS JOINT UNIFIED SCHOOL DISTRICT

Revision	Date

Submittal	Date
50% DD REVIEW	06/15/2021
100% DD SUBMITTAL	07/26/2021
50% CD REVIEW	10/08/2021
100% CD DSA SUBMITTAL	10/22/2021
DSA SUBMITTAL	03/24/2022

Job Number	1904413
Date Published	10/22/2021
Checked By	AW, JC
Scale	

PLANTING PLAN

L7.01

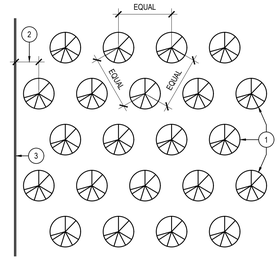

LEGEND:

1. LOCATE PLANTS WITH EQUAL SPACING AS INDICATED ON PLAN (TRIANGULAR SPACING).
2. 1/2 ON CENTER SPACING.
3. PAVING, BUILDING, OR HEADER SHOWING PLANTING AREA LIMIT.

TRIANGULAR SPACING

1/4" = 1'-0" | - | 04

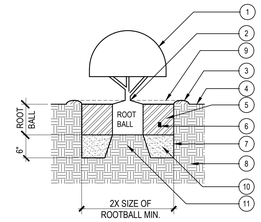

NOTE:

SEE DETAIL 04 / - FOR SPACING DIAGRAM

LEGEND

1. 1 TO 15 GALLON SHRUB. (SEE PLANTING PLAN)
2. SET CROWN OF ROOTBALL 1" ABOVE FINISH GRADE AND SLOPE SOIL AWAY FROM ROOTBALL. ADJUST HEIGHT OF PLANTING TO ACCOMODATE SETTLING DUE TO SOIL TYPES.
3. WATER BASIN. 4" MIN. FOR 5 GAL. & LARGER. 2" MIN FOR 1 GAL.
4. FINISH GRADE
5. AMENDED BACKFILL. SEE SPECS FOR MIX AND PIT SIZE.
6. PLANT TABLET. SEE SPECS.
7. SCARIFY SIDES AND BOTTOM OF PLANTING PIT.
8. EXISTING SOIL.
9. 3" MULCH, MAINTAIN CONSTANTLY. SEE SPECS.
10. COMPACTED BACKFILL. SEE SPECS. PUDDLE AND SETTLE PRIOR TO SETTING SHRUB.
11. UNDISTURBED EXISTING SOIL TO FORM PEDESTAL. REPLACE WITH COMPACTED NATURAL SOIL IF HARDPAN EXISTS.

SHRUB PLANTING DETAIL

3/4" = 1'-0" | - | 03

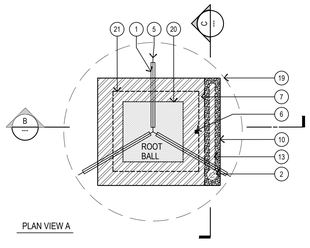

PLAN VIEW A

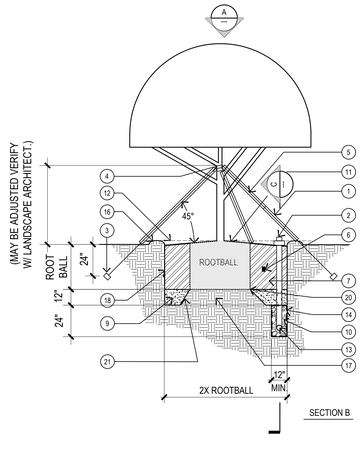

SECTION B

1. WHITE SURGICAL TUBING OVER ENTIRE LENGHT OF GUY WIRE (TYP.) 3 REQUIRED.
2. 4" NIBCO, BLACK - 'ABS' PLUG 4" NIBCO, BLACK - 'ABS' FEMALE RECIEVER NDS, WHITE 'PVC' ADAPTOR FOR CONNECTION FROM FEMALE RECIEVER TO PVC PERFORATED DRAIN PIPE
3. DUCKBILL EARTH ANCHORING SYSTEM.
4. BLACK PLASTIC TIES.
5. GUY WIRE W/TURN BUCKLE AS REQUIRED TO SUPPORT TREE (3-REQUIRED). PART OF DUCKBILL EARTH ANCHORING SYSTEM.
6. PLANT TABLETS. SEE SPECIFICATIONS.
7. AMENDED BACKFILL. SEE SPECIFICATIONS FOR MIX + PIT SIZE.
8. (NOT USED)
9. COMPACTED BACKFILL, PUDDLE & SETTLE PRIOR TO SETTLING TREE.
10. 12" WIDE TRENCH ALONG ONE SIDE FILL W/ 3/4" DRAIN GRAVEL.
11. SET TOP OF ROOTBALL 2" ABOVE SURROUNDING GRADE AND SLOPE FOR DRAINAGE. PROVIDE 2' DIA. MULCH RING AT TREES WITHIN TURF. ADJUST HEIGHT OF TREE PLANTING TO ACCOMODATE SETTLING DUE TO SOIL TYP.
12. 3" MULCH, MAINTAIN CONSTANTLY.
13. 4" PERFORATED DRAIN PIPE. PLACED HORIZONTAL.
14. "MIRAFI" 140N FILTER FABRIC WRAPPING DRAIN GRAVEL, OVERLAPPING SEPERATE PIECES @ 6".
15. EXISTING SOIL.
16. WATER BASIN. 6" MIN. DEPTH. REMOVE BASIN IN LAWN AREAS AND AS DIRECTED BY LANDSCAPE ARCHITECT.
17. UNDISTURBED EXISTING SOIL TO FORM PEDESTAL & PREVENT SETTLING OF TREE. REPLACE WITH COMPACTED NATURAL SOIL IF HARDPAN EXISTS.
18. SCARIFY SIDES AND BOTTOM OF PLANTING PIT.
19. TREE CANOPY
20. BOTTOM OF ROOTBALL/ TOP OF PEDESTAL.
21. BASE OF PEDESTAL FOR TREE.

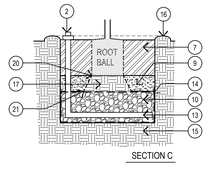

SECTION C

NOTE:

PROVIDE (2) 6" DIA. x 6' DEEP AUGER HOLES IF EXCAVATED HOLE DOES NOT DRAIN FASTER THAN 1" PER HOUR AS DETERMINED BY SOILS REPORT AND FIELD CONDITIONS.

TREE GUYING AND PLANTING DETAIL

1/4"=1'-0" | - | 01

IDENTIFICATION STAMP
DIV. OF THE STATE ARCHITECT
APP: 02-119490 INC:
REVIEWED FOR
SS ☑ FLS ☑ ACS ☑
DATE: 09/13/2022

LPA

ARCHITECTURE ENGINEERING INTERIORS
LANDSCAPE ARCHITECTURE PLANNING

916-287-2400 Office

916-287-2401 Fax

LPADesignStudios.com

431 I Street, Suite 107
Sacramento, California 95814

LICENSED LANDSCAPE ARCHITECT
JON CARTER WHITAKER
No. 5011
REGISTERED PROFESSIONAL ENGINEER
CERTIFIED LANDSCAPE ARCHITECT
STATE OF CALIFORNIA

This document and all other project documents, ideas, aesthetics and designs incorporated therein are instruments of service. All project documents are copyright protected, are the property of LPA, Inc. (LPA) and cannot be lawfully used in whole or in part for any project or purpose except as set forth in the contractual agreement between LPA and its Client. The unauthorized disclosure and/or use of the project documents (including the creation of derivative works), may give rise to liability for copyright infringement, unlawful disclosure, use or misappropriation of property rights held by LPA. The unauthorized use of the project documents will give rise to the recovery of monetary losses and damages including attorney fees and costs for which the unauthorized user will be held liable. Project documents describe the design intent of the work and are not a representation of as-built or existing conditions. LPA is not responsible for any discrepancies between the project documents and the existing conditions.

DAVIS SR HIGH SCHOOL
AQUATICS CENTER
315 W 14TH ST., Davis, CA 95616

Developed for
DAVIS JOINT UNIFIED SCHOOL DISTRICT

Revision	Date

Submittal	Date
50% DD REVIEW	06/15/2021
100% DD SUBMITTAL	07/26/2021
50% CD REVIEW	10/08/2021
100% CD DSA SUBMITTAL	10/22/2021
DSA SUBMITTAL	03/24/2022

Job Number	1904413
Date Published	10/22/2021
Checked By	AW, JC
Scale	

PLANTING DETAILS

L7.02

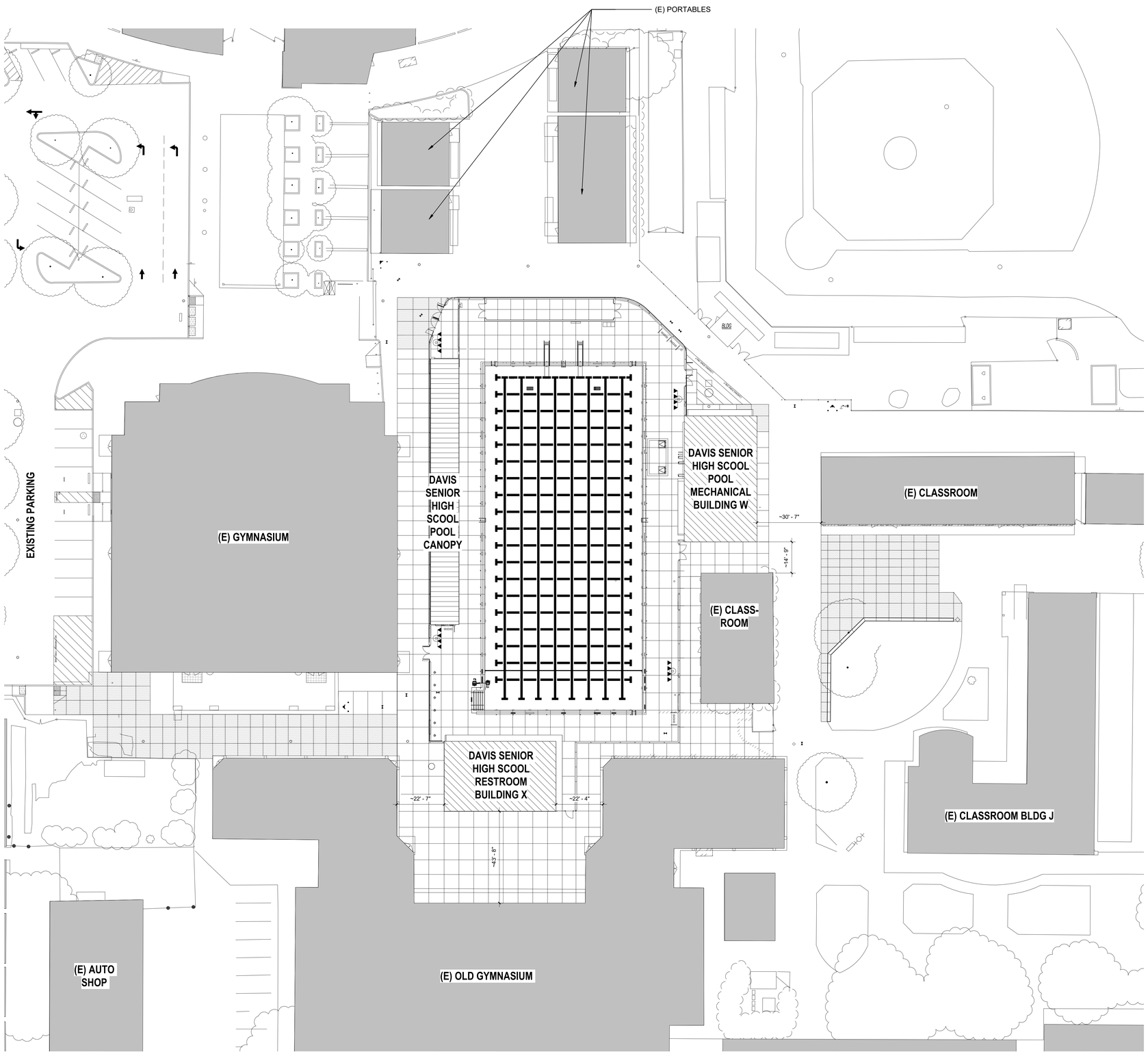

ARCHITECTURAL SITE PLAN | 1" = 20'-0" | 05

KEYNOTES

IDENTIFICATION STAMP
DIV. OF THE STATE ARCHITECT
APP: 02-119490 INC:
REVIEWED FOR
SS ☑ FLS ☑ ACS ☑
DATE: 09/13/2022

LEGEND

- NEW BUILDING UNDER SCOPE OF WORK
- NEW METAL SHADE STRUCTURE UNDER SCOPE OF WORK
- (E) BUILDINGS NOT UNDER SCOPE OF WORK

GENERAL NOTES

1. **REFER TO CIVIL AND LANDSCAPE SHEETS** FOR ALL WORK OUTSIDE OF THE BUILDING

KEY PLAN

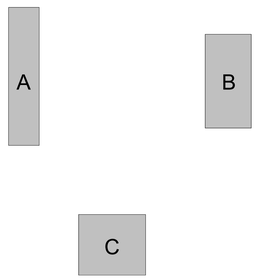

LPA
ARCHITECTURE ENGINEERING INTERIORS
LANDSCAPE ARCHITECTURE PLANNING
916-287-2400 Office
916-287-2401 Fax
LPADesignStudios.com
431 I Street,
Suite 107
Sacramento, California 95814

LICENSED ARCHITECT
DARING W. KIN
No. C-33172
REN 05-31-23
STATE OF CALIFORNIA

This document and all other project documents, ideas, aesthetics and designs incorporated therein are instruments of service. All project documents are copyright protected, are the property of LPA, Inc. (LPA) and cannot be lawfully used in whole or in part for any project or purpose except as set forth in the contractual agreement between LPA and its Client. The unauthorized disclosure and/or use of the project documents (including the creation of derivative works), may give rise to liability for copyright infringement, unlawful disclosure, use or misappropriation of property rights held by LPA. The unauthorized use of the project documents will give rise to the recovery of monetary losses and damages including attorney fees and costs for which the unauthorized user will be held liable.
Project documents describe the design intent of the work and are not a representation of as-built or existing conditions. LPA is not responsible for any discrepancies between the project documents and the existing conditions.

© LPA, Inc.

DAVIS SR HIGH SCHOOL
AQUATICS CENTER
315 W 14TH ST., DAVIS, CA 95616

Developed for
DAVIS JOINT UNIFIED SCHOOL DISTRICT

Revision	Date

Submittal	Date
50% DD REVIEW	06/15/2021
100% DD SUBMITTAL	07/26/2021
50% CD REVIEW	10/08/2021
100% CD DSA SUBMITTAL	10/22/2021
DSA SUBMITTAL	03/24/2022

Job Number	1904413
Date Published	03/24/2022
Checked By	Checker
Scale	As indicated

ARCHITECTURAL SITE PLAN

A1.01

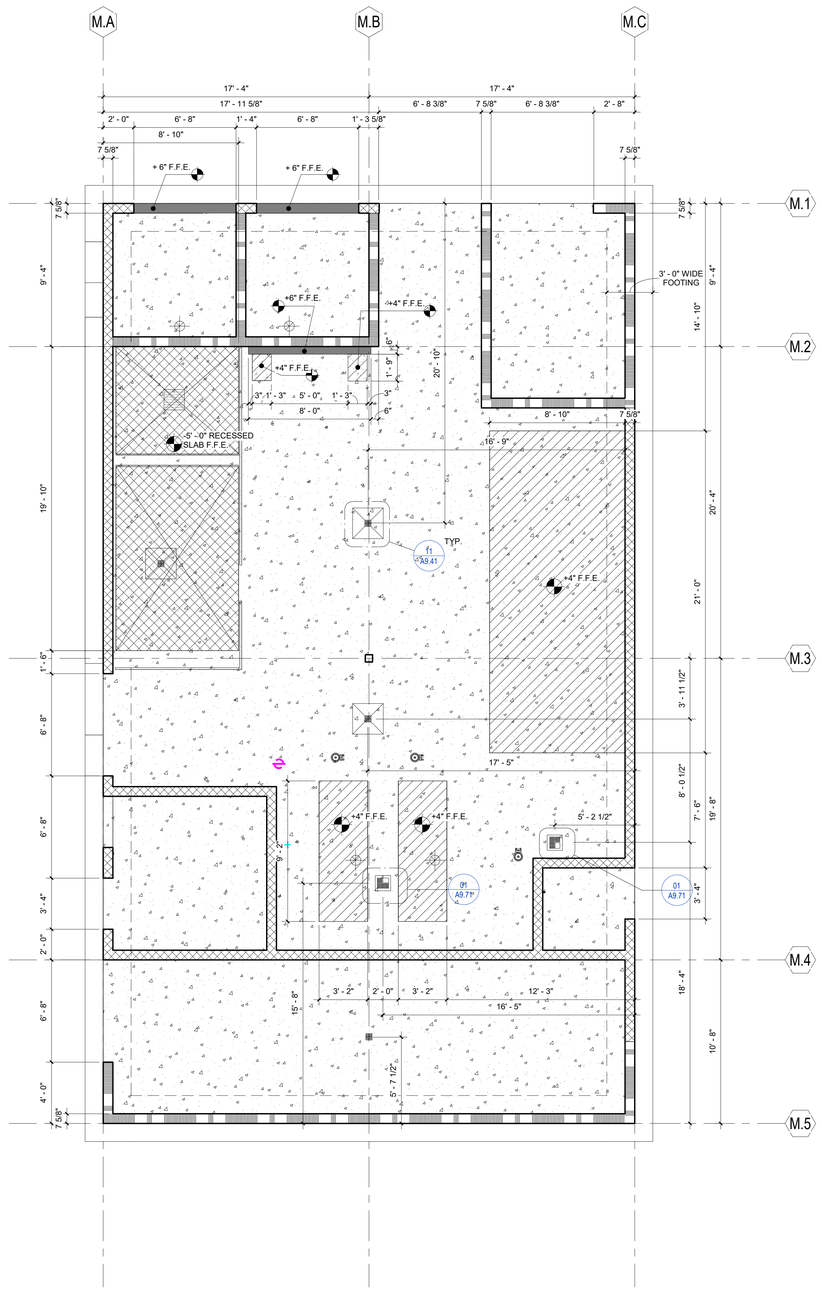

SLAB PLAN - POOL MECHANICAL BUILDING | 1/4" = 1'-0" | 05

KEYNOTES

IDENTIFICATION STAMP
DIV. OF THE STATE ARCHITECT
APP: 02-119490 INC:
REVIEWED FOR
SS ☑ FLS ☑ ACS ☑
DATE: 09/13/2022

LEGEND

- CONCRETE CURB, REFER TO STRUCTURAL DRAWINGS
- CONCRETE SLAB ON GRADE AT FIRST FLOOR, REFER TO STRUCTURAL DRAWINGS
- SLAB DEPRESSION, DEPTH OF DEPRESSION AS INDICATED ON PLAN
- RAISED CONCRETE PAD
- FLOOR DRAIN, REFER TO PLUMBING DRAWINGS
- LOCAL DEPRESSION, SEE DETAIL 11/ A9.41
- LOCATION DESCRIPTION
- Name / Elevation — ELEVATION REFERENCE POINT
- ELEVATION FROM FINISH FLOOR
- MASONRY WALL CONSTRUCTION
- 1 HOUR RATED MASONRY WALL CONSTRUCTION TO MATCH DESIGN NO. U937

GENERAL NOTES

1. CONTRACTOR SHALL VERIFY ALL DIMENSIONS PRIOR TO ANY POUR. CONTRACTOR TO CONFIRM ALL DEPRESSIONS MEET THE DESIGN INTENT OF OUR DRAWINGS AND MANUFACTURED PRODUCTS.
2. ALL SLAB PENETRATIONS TO BE TREATED BY MASTIC.
3. REFER TO PARTITION LAYOUT ON FLOOR PLAN AND WALL TYPE TAGS FOR WALL TYPE ASSEMBLY DETAILS
4. REFER TO CIVIL DRAWINGS FOR SITE PAVING ELEVATIONS
5. REFER TO LANDSCAPE DRAWINGS FOR PAVING LAYOUT
6. DIMENSIONS FOR FLOOR DRAIN LOCATIONS ARE TAKEN FROM CENTERLINE OF DRAIN, U.N.O.
7. FOR DEPRESSED SLAB LOCATIONS AT DOORS, CENTER DEPRESSION WITH DOOR OPENING, U.N.O.
8. COORDINATE LOCATION AND SIZE OF EQUIPMENT PADS AND CURBS WITH MECHANICAL, ELECTRICAL AND PLUMBING DRAWINGS.
9. VERIFY ELEVATOR REQUIREMENTS WITH MANUFACTURER.
10. REFER TO A2.1 SERIES FINISH FLOOR PLANS FOR EXPOSED AND POLISHED CONCRETE LOCATOINS. PROVIDE PROTECTION BOARD.
11. DOOR OPENINGS ARE DIMENSIONED TO THE EDGE OF CONCRETE CURB. COORDINATE WITH FLOOR PLAN, OPENING TYPES AND DOOR SCHEDULE.

KEY PLAN

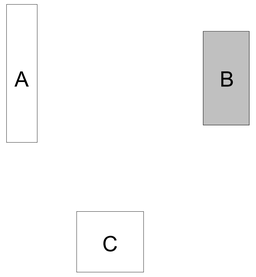

LPA
ARCHITECTURE ENGINEERING INTERIORS
LANDSCAPE ARCHITECTURE PLANNING
916-287-2400 Office
916-287-2401 Fax
LPADesignStudios.com
431 I Street,
Suite 107
Sacramento, California 95814

LICENSED ARCHITECT
DANG W. MIN
C-33172
REN: 05-31-23
STATE OF CALIFORNIA

This document and all other project documents, ideas, aesthetics and designs incorporated therein are instruments of service. All project documents are copyright protected, are the property of LPA, Inc. (LPA) and cannot be lawfully used in whole or in part for any project or purpose except as set forth in the contractual agreement between LPA and its Client. The unauthorized disclosure and/or use of the project documents (including the creation of derivative works), may give rise to liability for copyright infringement, unlawful disclosure, use or misappropriation of property rights held by LPA. The unauthorized use of the project documents will give rise to the recovery of monetary losses and damages including attorney fees and costs for which the unauthorized user will be held liable.
Project documents describe the design intent of the work and are not a representation of as-built or existing conditions. LPA is not responsible for any discrepancies between the project documents and the existing conditions.

© LPA, Inc.

DAVIS SR HIGH SCHOOL
AQUATICS CENTER
315 W 14TH ST., DAVIS, CA 95616

Developed for
DAVIS JOINT UNIFIED SCHOOL DISTRICT

Revision	Date

Submittal	Date
50% DD REVIEW	06/15/2021
100% DD SUBMITTAL	07/26/2021
50% CD REVIEW	10/08/2021
100% CD DSA SUBMITTAL	10/22/2021
DSA SUBMITTAL	09/24/2022

Job Number	1904413
Date Published	03/24/2022
Checked By	Checker
Scale	As indicated

SLAB PLAN - POOL MECHANICAL BUILDING

A2.01

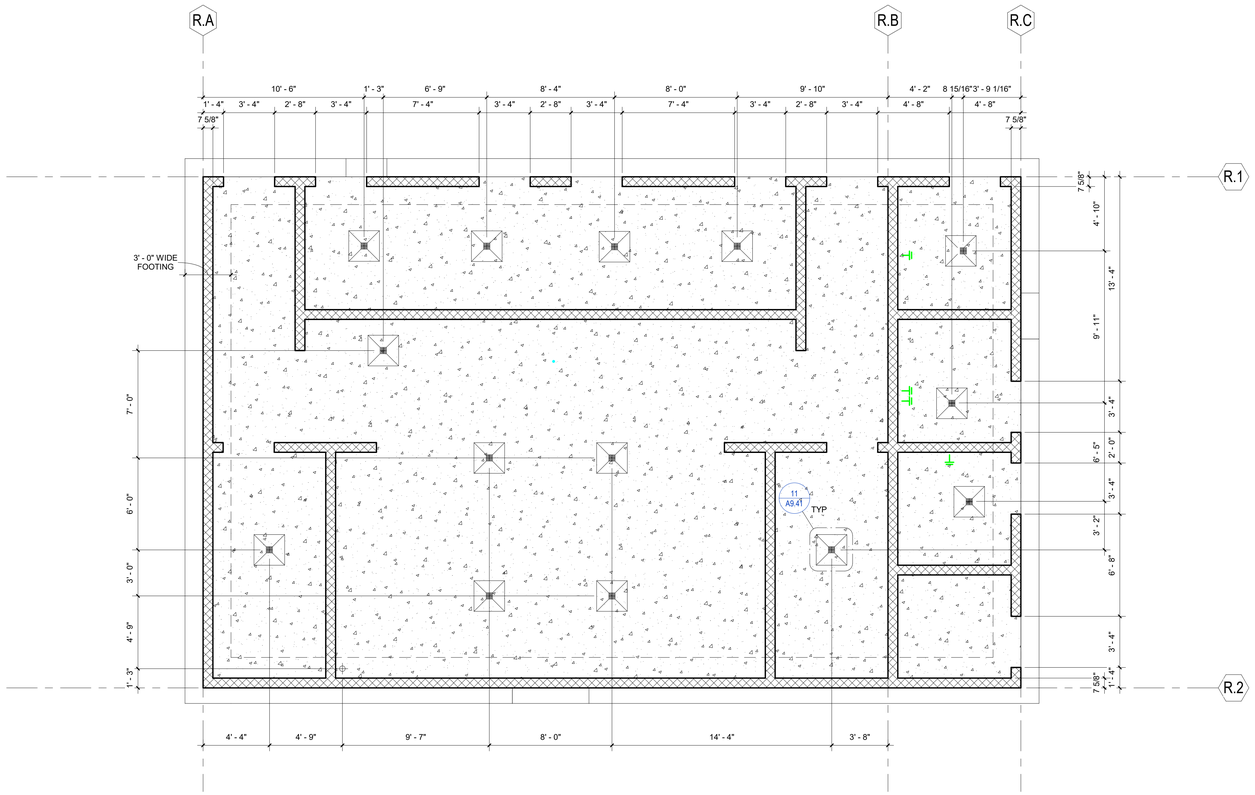

SLAB PLAN - POOL RESTROOM BUILDING | 1/4" = 1'-0" | 05

KEYNOTES

IDENTIFICATION STAMP
DIV. OF THE STATE ARCHITECT
APP: 02-119490 INC:
REVIEWED FOR
SS ☑ FLS ☑ ACS ☑
DATE: 09/13/2022

LEGEND

- CONCRETE CURB, REFER TO STRUCTURAL DRAWINGS
- CONCRETE SLAB ON GRADE AT FIRST FLOOR, REFER TO STRUCTURAL DRAWINGS
- SLAB DEPRESSION, DEPTH OF DEPRESSION AS INDICATED ON PLAN
- RAISED CONCRETE PAD
- FLOOR DRAIN, REFER TO PLUMBING DRAWINGS
- LOCAL DEPRESSION, SEE DETAIL 11/ A9.41
- LOCATION DESCRIPTION
- Name / Elevation — ELEVATION REFERENCE POINT
- ELEVATION FROM FINISH FLOOR
- MASONRY WALL CONSTRUCTION
- 1 HOUR RATED MASONRY WALL CONSTRUCTION TO MATCH DESIGN NO. U937

GENERAL NOTES

1. CONTRACTOR SHALL VERIFY ALL DIMENSIONS PRIOR TO ANY POUR. CONTRACTOR TO CONFIRM ALL DEPRESSIONS MEET THE DESIGN INTENT OF OUR DRAWINGS AND MANUFACTURED PRODUCTS.
2. ALL SLAB PENETRATIONS TO BE TREATED BY MASTIC.
3. REFER TO PARTITION LAYOUT ON FLOOR PLAN AND WALL TYPE TAGS FOR WALL TYPE ASSEMBLY DETAILS
4. REFER TO CIVIL DRAWINGS FOR SITE PAVING ELEVATIONS
5. REFER TO LANDSCAPE DRAWINGS FOR PAVING LAYOUT
6. DIMENSIONS FOR FLOOR DRAIN LOCATIONS ARE TAKEN FROM CENTERLINE OF DRAIN, U.N.O.
7. FOR DEPRESSED SLAB LOCATIONS AT DOORS, CENTER DEPRESSION WITH DOOR OPENING, U.N.O.
8. COORDINATE LOCATION AND SIZE OF EQUIPMENT PADS AND CURBS WITH MECHANICAL, ELECTRICAL AND PLUMBING DRAWINGS.
9. VERIFY ELEVATOR REQUIREMENTS WITH MANUFACTURER.
10. REFER TO A2.1 SERIES FINISH FLOOR PLANS FOR EXPOSED AND POLISHED CONCRETE LOCATOINS. PROVIDE PROTECTION BOARD.
11. DOOR OPENINGS ARE DIMENSIONED TO THE EDGE OF CONCRETE CURB. COORDINATE WITH FLOOR PLAN, OPENING TYPES AND DOOR SCHEDULE.

KEY PLAN

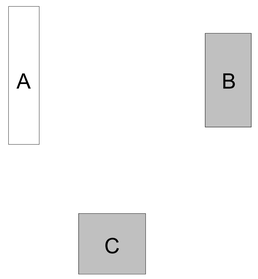

LPA

ARCHITECTURE ENGINEERING INTERIORS
LANDSCAPE ARCHITECTURE PLANNING

916-287-2400 Office

916-287-2401 Fax

LPADesignStudios.com

431 I Street,
Suite 107
Sacramento, California 95814

LICENSED ARCHITECT
JENG W. MIN
C-33172
REN 05-31-23
STATE OF CALIFORNIA

This document and all other project documents, ideas, aesthetics and designs incorporated therein are instruments of service. All project documents are copyright protected, are the property of LPA, Inc. (LPA) and cannot be lawfully used in whole or in part for any project or purpose except as set forth in the contractual agreement between LPA and its Client. The unauthorized disclosure and/or use of the project documents (including the creation of derivative works), may give rise to liability for copyright infringement, unlawful disclosure, use or misappropriation of property rights held by LPA. The unauthorized use of the project documents will give rise to the recovery of monetary losses and damages including attorney fees and costs for which the unauthorized user will be held liable.
Project documents describe the design intent of the work and are not a representation of as-built or existing conditions. LPA is not responsible for any discrepancies between the project documents and the existing conditions.

© LPA, Inc.

DAVIS SR HIGH SCHOOL
AQUATICS CENTER
315 W 14TH ST., DAVIS, CA 95616

Developed for
DAVIS JOINT UNIFIED SCHOOL DISTRICT

Revision	Date

Submittal	Date
50% DD REVIEW	06/15/2021
100% DD SUBMITTAL	07/26/2021
50% CD REVIEW	10/08/2021
100% CD DSA SUBMITTAL	10/22/2021
DSA SUBMITTAL	03/24/2022

Job Number	1904413
Date Published	03/24/2022
Checked By	Checker
Scale	As indicated

SLAB PLAN - POOL RESTROOM BUILDING

A2.02

FINISH SCHEDULE

TYPE MARK	DESCRIPTION	MANUFACTURER	STYLE / NUMBER	COLOR / FINISH	COMMENTS
WALL FINISHES					
P-1	PAINT	SHERWIN WILLIAMS		PURE WHITE SW7005	100% ACRYLIC PAINT
EP-1	EPOXY WALL COATING	STONHARD	STONGLAZE VSR	ASH GRAY	5'-0" HIGH
FRP	FIBERGLASS REINFORCED PLASTIC PANELS	MARLITE INC.	SMOOTH	S 490N LIGHT GREY	CUSTODIAL, 5'-0" HIGH
WALL BASE					
B-1	EPOXY COVE BASE	STONHARD		TBD	4" HIGH, 1/8" METAL COVE STRIP
FLOOR FINISHES					
EP-2	EPOXY FLOOR	STONHARD	STONSHIELD HRI	GLACIER	RESTROOMS
SC	SEALED CONCRETE				
HIGH-PERFORMANCE COATINGS					
HPP-1	ALKYD ENAMEL	TNEMEC COMPANY INC.	SEE SPECIFICATION SECTION 099600	TO MATCH P-1	

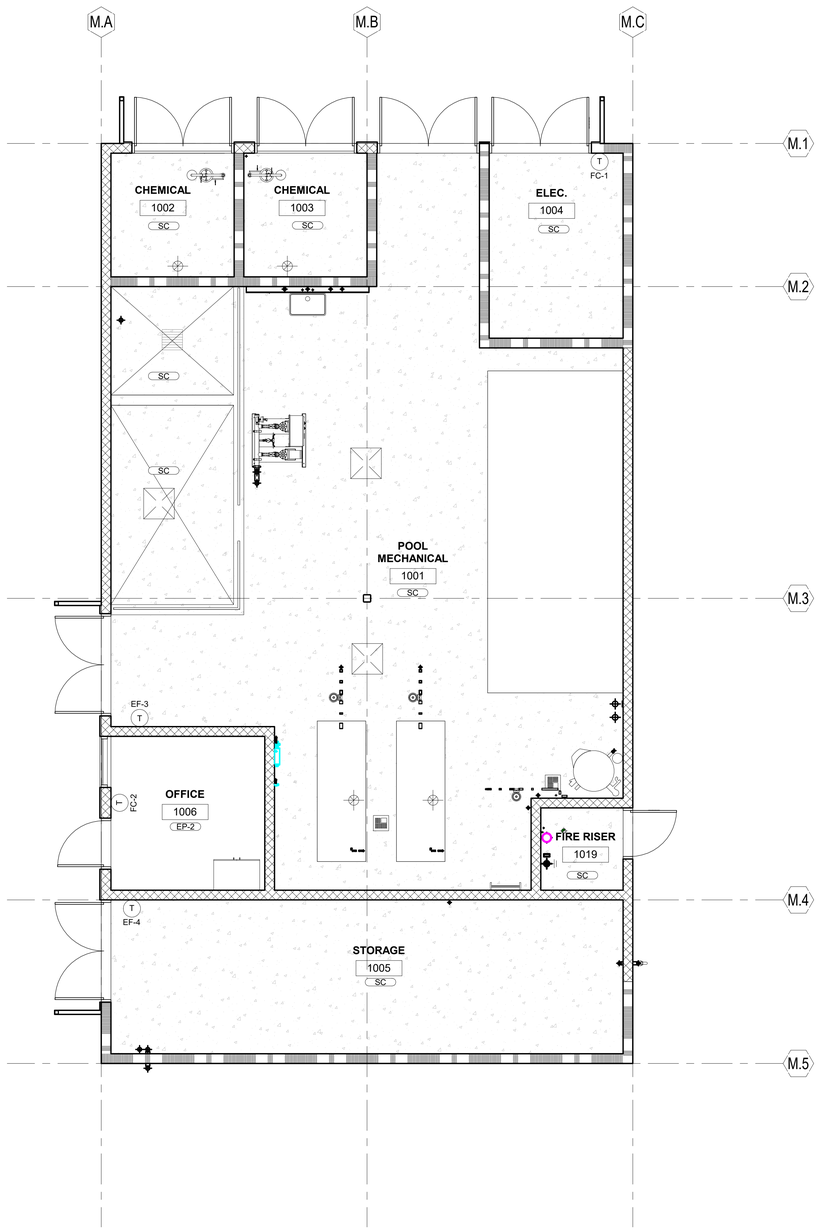

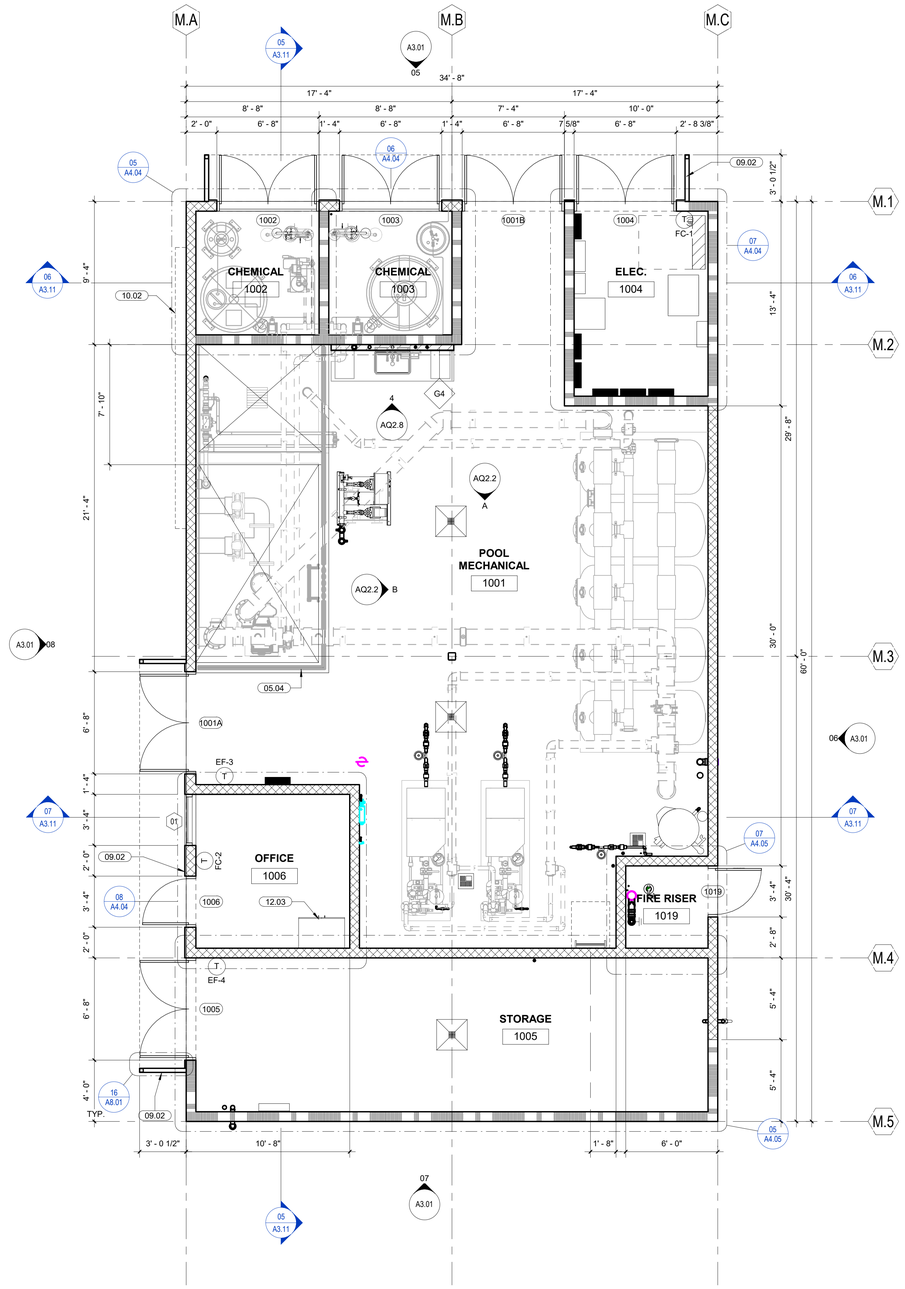

FINISH FLOOR PLAN - POOL MECHANICAL BUILDING 1/4" = 1'-0" 17

FLOOR PLAN - POOL MECHANICAL BUILDING 1/4" = 1'-0" 05

KEYNOTES

05.04	METAL PIT GUARDRAIL, REF: SWIMMING POOL
09.02	GALVANIZED STEEL WALL PANEL, PAINTED
10.02	DIGITAL SCOREBOARD. REFER TO STRUCTURAL AND POOL DRAWINGS, REF: 1/AQ1.11 FOR ATTACHMENT TO STRUCTURE
12.03	METAL STORAGE CABINET

IDENTIFICATION STAMP
DIV. OF THE STATE ARCHITECT
APP: 02-119490 INC:
REVIEWED FOR
SS ☑ FLS ☑ ACS ☑
DATE: 09/13/2022

LEGEND

WALL TYPE. LETTER INDICATES WALL TYPE. SEE A9.01

STUD SIZE. NUMBER INDICATES STUD SIZE. SEE A9.01. REFER TO S6.71 FOR INTERIOR STUD WALL SCHEDULE

MASONRY WALL CONSTRUCTION

1 HOUR RATED MASONRY WALL CONSTRUCTION TO MATCH DESIGN NO. U937

WOOD STUD WALL CONSTRUCTION

SURFACE MOUNTED FIRE EXTINGUISHER CABINET, RE: 02/ A9.71

FLOOR FINISH

WALL FINISH
BASE

LEADER LINE INDICATING EXTENT OF FINISH AT WALL.
WHERE NO LEADER LINE IS INDICATED, FINISH OCCURS THROUGHOUT ROOM

ALIGN

WINDOW TYPE TAG, REFER TO A6.XX SERIES

GENERAL NOTES

1. SEE AQ SERIES SHEETS FOR POOL EQUIPMENT AND FIXTURES.
2. SEE SHEET G0.82 FOR TYPICAL DOOR NOTES AND DETAILS.
3. SEE DOOR SCHEDULE FOR DOOR FINISH, FRAME FINISH, AND THRESHOLD DETAIL REFERENCE
4. P-1 PAINT FINISH TYPICAL @ GYP WALL THROUGHOUT WITH SEMI-GLOSS AT RESTROOMS.
5. SEE INTERIOR ELEVATIONS FOR WALL FINISHES
6. ALL EXPOSED STRUCTURAL STEEL/METAL DECK TO BE P-1 (INTERIOR) OR HPP-1 (EXTERIOR), U.N.O. AT MECHANICAL ROOM. ALL EXPOSED STRUCTURAL STEEL/METAL DECK TO BE HIGH PERFORMANCE COATED WITH HPP-1 (ROOMS 1001, 1002, 1003)
7. 4" EPOXY COVED EPOXY BASE AT EPOXY FLOORING PER FINISH PLAN. SEE 07/A9.11
8. 4" RUBBER BASE AT RESILIENT FLOORING, UNO.
9. EQUIPMENT IS FOR DESIGN REFERENCE ONLY.
10. REFER TO ELECTRICAL DRAWINGS FOR COMPLETE POWER AND DATA LOCATIONS. FOR ELECTRICAL AND DATA SYMBOLS, REFER TO ELECTRICAL AND LOW VOLTAGE DRAWINGS.
11. PROVIDE BACKING AND APPLICABLE INFRASTRUCTURE AT ALL OWNER FURNISHED OWNER INSTALLED EQUIPMENT
12. DIMENSIONS TO DOOR OPENING ARE MEASURED TO ROUGH OPENING
13. SEE SHEET G0.81 FOR RESTROOM INFORMATION

KEY PLAN

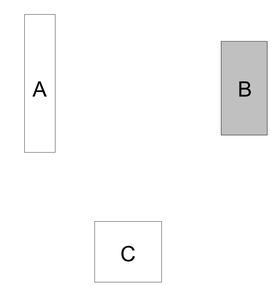

LPA
ARCHITECTURE ENGINEERING INTERIORS
LANDSCAPE ARCHITECTURE PLANNING

916-287-2400 Office
916-287-2401 Fax
LPADesignStudios.com
431 I Street,
Suite 107
Sacramento, California 95814

LICENSED ARCHITECT
DANING WAN
No. C-33172
REN 06-31-23
STATE OF CALIFORNIA

This document and all other project documents, ideas, aesthetics and designs incorporated therein are instruments of service. All project documents are copyright protected, are the property of LPA, Inc. (LPA) and cannot be lawfully used in whole or in part for any purpose or purpose except as set forth in the contractual agreement between LPA and its Client. The unauthorized disclosure and/or use of the project documents (including the creation of derivative works), may give rise to liability for copyright infringement, unlawful disclosure, use or misappropriation of property rights held by LPA. The unauthorized use of the project documents will give rise to the recovery of monetary losses and damages including attorney fees and costs for which the unauthorized user will be held liable.
Project documents describe the design intent of the work and are not a representation of as-built or existing conditions. LPA is not responsible for any discrepancies between the project documents and the existing conditions.

© LPA, Inc.

DAVIS SR HIGH SCHOOL
AQUATICS CENTER
315 W 14TH ST., DAVIS, CA 95616

Developed for
DAVIS JOINT UNIFIED SCHOOL DISTRICT

Revision	Date

Submittal	Date
50% DD REVIEW	06/15/2021
100% DD SUBMITTAL	07/26/2021
50% CD REVIEW	10/08/2021
100% CD DSA SUBMITTAL	10/22/2021
DSA SUBMITTAL	03/24/2022

Job Number	1904413
Date Published	03/24/2022
Checked By	Checker
Scale	As indicated

FLOOR PLAN - POOL MECHANICAL BUILDING

A2.11

FINISH SCHEDULE

TYPE MARK	DESCRIPTION	MANUFACTURER	STYLE / NUMBER	COLOR / FINISH	COMMENTS
WALL FINISHES					
P-1	PAINT	SHERWIN WILLIAMS		PURE WHITE SW7005	100% ACRYLIC PAINT
EP-1	EPOXY WALL COATING	STONHARD	STONGLAZE VSR	ASH GRAY	5'-0" HIGH
FRP	FIBERGLASS REINFORCED PLASTIC PANELS	MARLITE INC.	SMOOTH	S 490N LIGHT GREY	CUSTODIAL, 5'-0" HIGH
WALL BASE					
B-1	EPOXY COVE BASE	STONHARD		TBD	4" HIGH, 1/8" METAL COVE STRIP
FLOOR FINISHES					
EP-2	EPOXY FLOOR	STONHARD	STONSHIELD HRI	GLACIER	RESTROOMS
SC	SEALED CONCRETE				
HIGH-PERFORMANCE COATINGS					
HPP-1	ALKYD ENAMEL	TNEMEC COMPANY INC.	SEE SPECIFICATION SECTION 099600	TO MATCH P-1	

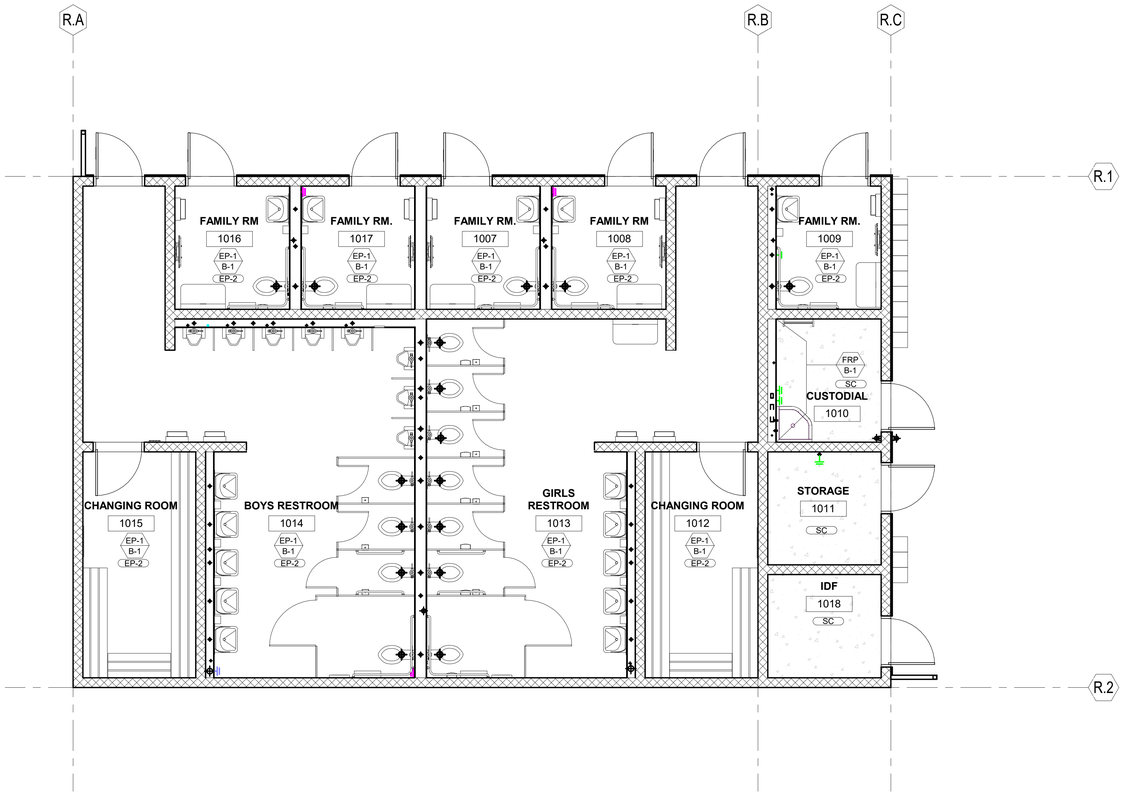

FINISH FLOOR PLAN -POOL RESTROOM BUILDING | 1/4" = 1'-0" | 07

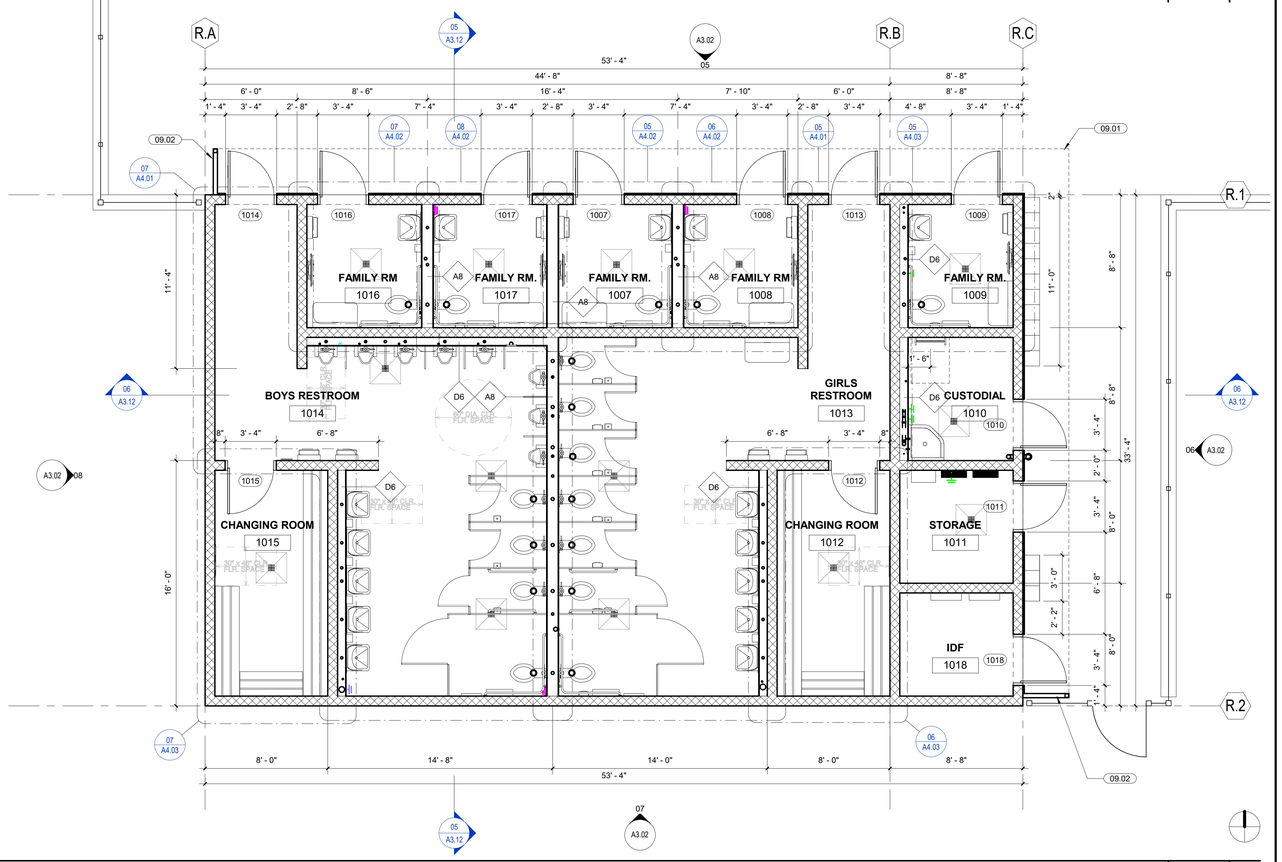

FLOOR PLAN - POOL RESTROOM BUILDING | 1/4" = 1'-0" | 05

KEYNOTES

09.01	GALVANIZED STEEL PANEL VISOR, PAINTED
09.02	GALVANIZED STEEL WALL PANEL, PAINTED

IDENTIFICATION STAMP
DIV. OF THE STATE ARCHITECT
APP: 02-119490 INC:
REVIEWED FOR
SS ☑ FLS ☑ ACS ☑
DATE: 09/13/2022

LEGEND

WALL TYPE. LETTER INDICATES WALL TYPE. SEE A9.01

STUD SIZE. NUMBER INDICATES STUD SIZE. SEE A9.01. REFER TO S6.71 FOR INTERIOR STUD WALL SCHEDULE

MASONRY WALL CONSTRUCTION

1 HOUR RATED MASONRY WALL CONSTRUCTION TO MATCH DESIGN NO. U937

METAL STUD WALL CONSTRUCTION

SURFACE MOUNTED FIRE EXTINGUISHER CABINET, RE: 02/ A9.71

FLOOR FINISH

WALL FINISH
BASE

LEADER LINE INDICATING EXTENT OF FINISH AT WALL. WHERE NO LEADER LINE IS INDICATED, FINISH OCCURS THROUGHOUT ROOM

ALIGN

WINDOW TYPE TAG, REFER TO A6.XX SERIES

GENERAL NOTES

1. SEE AQ SERIES SHEETS FOR POOL EQUIPMENT AND FIXTURES.
2. SEE SHEET G0.82 FOR TYPICAL DOOR NOTES AND DETAILS.
3. SEE DOOR SCHEDULE FOR DOOR FINISH, FRAME FINISH, AND THRESHOLD DETAIL REFERENCE
4. P-1 PAINT FINISH TYPICAL @ GYP WALL THROUGHOUT WITH SEMI-GLOSS AT RESTROOMS.
5. SEE INTERIOR ELEVATIONS FOR WALL FINISHES
6. ALL EXPOSED STRUCTURAL STEEL/METAL DECK TO BE P-1 (INTERIOR) OR HPP-1 (EXTERIOR), U.N.O. AT MECHANICAL ROOM. ALL EXPOSED STRUCTURAL STEEL/METAL DECK TO BE HIGH PERFORMANCE COATED WITH HPP-1 (ROOMS 1001, 1002, 1003)
7. 4" EPOXY COVED EPOXY BASE AT EPOXY FLOORING PER FINISH PLAN. SEE 07/A9.11
8. 4" RUBBER BASE AT RESILIENT FLOORING, UNO.
9. EQUIPMENT IS FOR DESIGN REFERENCE ONLY.
10. REFER TO ELECTRICAL DRAWINGS FOR COMPLETE POWER AND DATA LOCATIONS. FOR ELECTRICAL AND DATA SYMBOLS, REFER TO ELECTRICAL AND LOW VOLTAGE DRAWINGS.
11. PROVIDE BACKING AND APPLICABLE INFRASTRUCTURE AT ALL OWNER FURNISHED OWNER INSTALLED EQUIPMENT
12. DIMENSIONS TO DOOR OPENING ARE MEASURED TO ROUGH OPENING
13. SEE SHEET G0.81 FOR RESTROOM INFORMATION

KEY PLAN

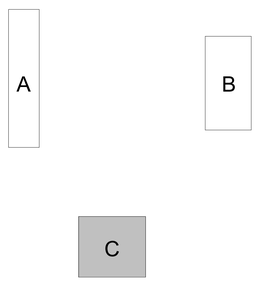

LPA
ARCHITECTURE ENGINEERING INTERIORS
LANDSCAPE ARCHITECTURE PLANNING
916-287-2400 Office
916-287-2401 Fax
LPADesignStudios.com
431 I Street,
Suite 107
Sacramento, California 95814
LICENSED ARCHITECT
DONG W. WIN
C-33172
REN: 05-31-23
STATE OF CALIFORNIA

This document and all other project documents, ideas, aesthetics and designs incorporated therein are instruments of service. All project documents are copyright protected, are the property of LPA, Inc. (LPA) and cannot be lawfully used in whole or in part for any project or purpose except as set forth in the contractual agreement between LPA and its Client. The unauthorized disclosure and/or use of the project documents (including the creation of derivative works), may give rise to liability for copyright infringement, unlawful disclosure, use or misappropriation of property rights held by LPA. The unauthorized use of the project documents will give rise to the recovery of monetary losses and damages including attorney fees and costs for which the unauthorized user will be held liable.
Project documents describe the design intent of the work and are not a representation of as-built or existing conditions. LPA is not responsible for any discrepancies between the project documents and the existing conditions.

© LPA, Inc.

DAVIS SR HIGH SCHOOL AQUATICS CENTER
315 W 14TH ST., DAVIS, CA 95616

Developed for
DAVIS JOINT UNIFIED SCHOOL DISTRICT

Revision	Date

Submittal	Date
50% DD REVIEW	06/15/2021
100% DD SUBMITTAL	07/26/2021
50% CD REVIEW	10/08/2021
100% CD DSA SUBMITTAL	10/22/2021
DSA SUBMITTAL	03/24/2022

Job Number	1904413
Date Published	03/24/2022
Checked By	Checker
Scale	As indicated

FLOOR PLAN - POOL RESTROOM BUILDING

A2.12

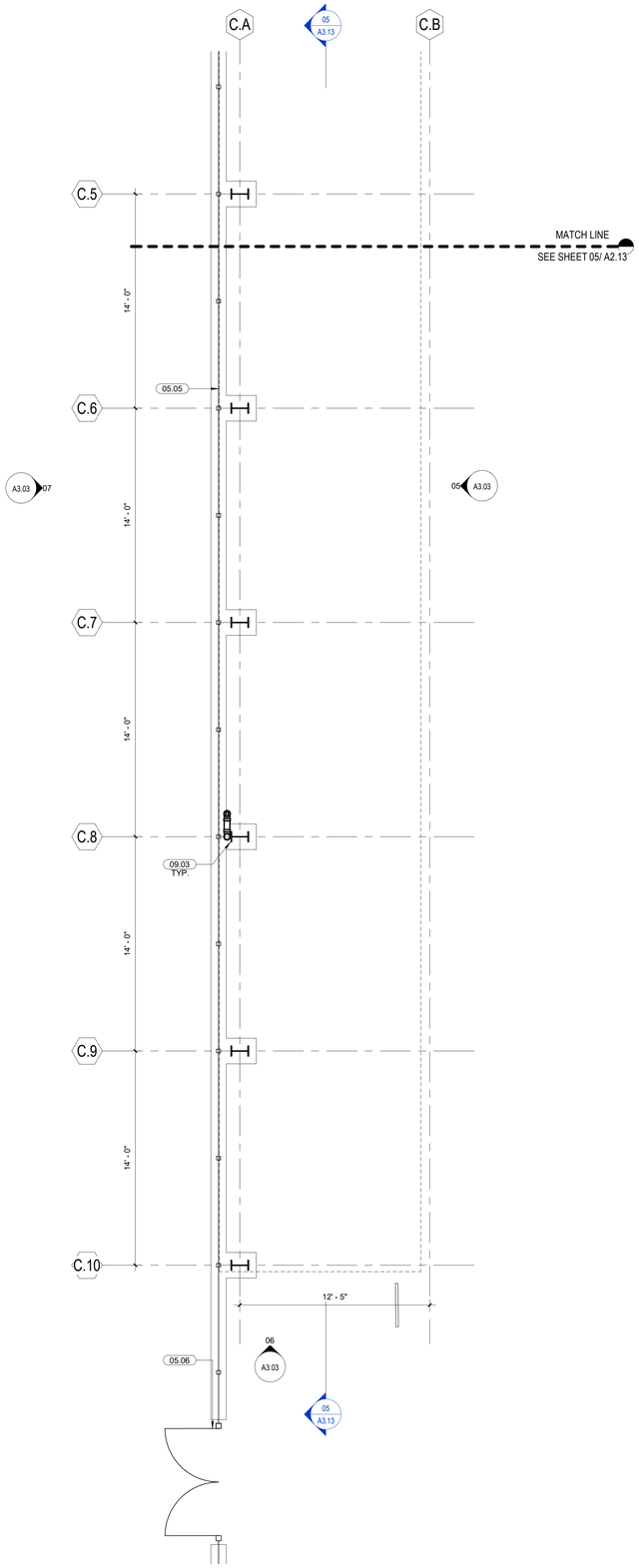

FLOOR PLAN - METAL SHADE STRUCTURE - SOUTH | 1/4" = 1'-0" | 17

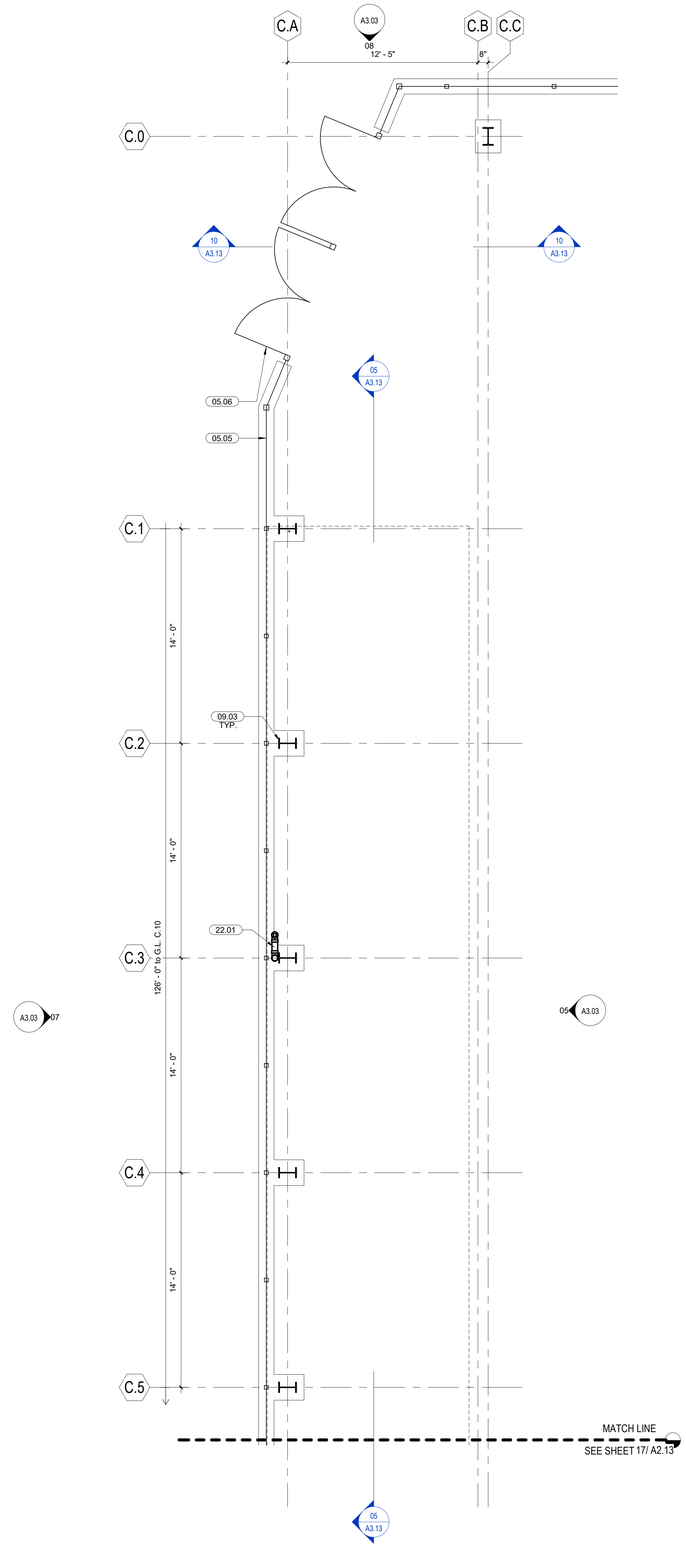

FLOOR PLAN - METAL SHADE STRUCTURE - NORTH | 1/4" = 1'-0" | 05

KEYNOTES

05.05	TUBE STEEL FENCE, REF: LANDSCAPE DRAWING
05.06	METAL GATE, REF: LANDSCAPE DRAWING
09.03	FULLY PAINTED WITH 1-HR INTUMESCENT PAINT
22.01	4" STEEL TUBE DOWNSPOUT. PAINT TO MATCH STEEL COLUMN

IDENTIFICATION STAMP
DIV. OF THE STATE ARCHITECT
APP: 02-119490 INC:
REVIEWED FOR
SS ☑ FLS ☑ ACS ☑
DATE: 09/13/2022

KEY PLAN

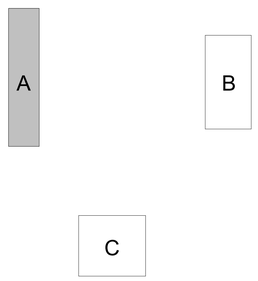

LPA

ARCHITECTURE ENGINEERING INTERIORS
LANDSCAPE ARCHITECTURE PLANNING

916-287-2400 Office

916-287-2401 Fax

LPADesignStudios.com

431 I Street,
Suite 107
Sacramento, California 95814

LICENSED ARCHITECT
CHING W. MIN
C-33172
EXP. REN 05-31-23
STATE OF CALIFORNIA

This document and all other project documents, ideas, aesthetics and designs incorporated therein are instruments of service. All project documents are copyright protected, are the property of LPA, Inc. (LPA) and cannot be lawfully used in whole or in part for any project or purpose except as set forth in the contractual agreement between LPA and its Client. The unauthorized disclosure and/or use of the project documents (including the creation of derivative works), may give rise to liability for copyright infringement, unlawful disclosure, use or misappropriation of property rights held by LPA. The unauthorized use of the project documents will give rise to the recovery of monetary losses and damages including attorney fees and costs for which the unauthorized user will be held liable.
Project documents describe the design intent of the work and are not a representation of as-built or existing conditions. LPA is not responsible for any discrepancies between the project documents and the existing conditions.

© LPA, Inc.

DAVIS SR HIGH SCHOOL
AQUATICS CENTER
315 W 14TH ST., DAVIS, CA 95616

Developed for
DAVIS JOINT UNIFIED SCHOOL DISTRICT

Revision	Date

Submittal	Date
50% DD REVIEW	06/15/2021
100% DD SUBMITTAL	07/26/2021
50% CD REVIEW	10/08/2021
100% CD DSA SUBMITTAL	10/22/2021
DSA SUBMITTAL	03/24/2022

Job Number	1904413
Date Published	03/24/2022
Checked By	Checker
Scale	1/4" = 1'-0"

FLOOR PLAN - METAL SHADE STRUCTURE

A2.13

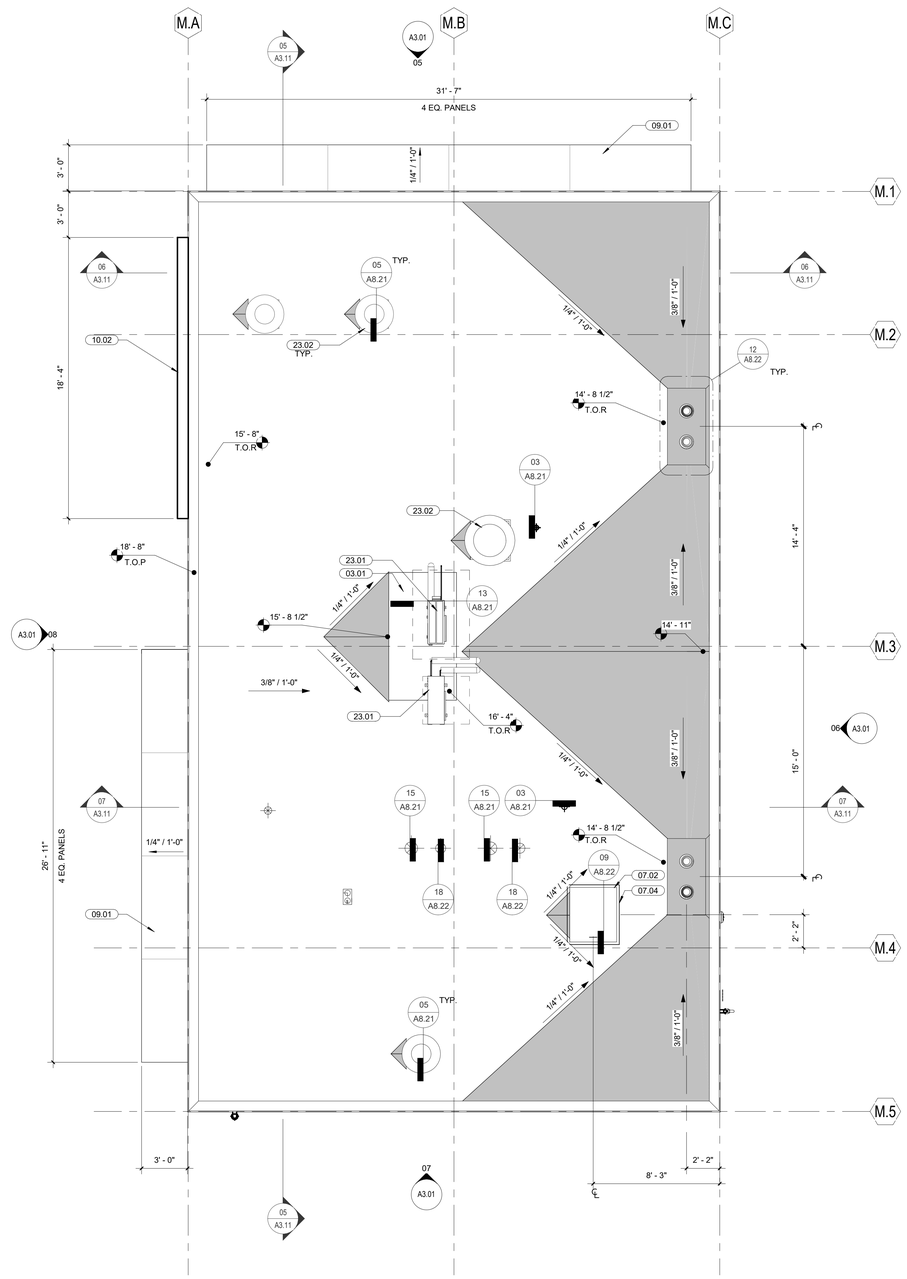

ROOF PLAN - POOL MECHANICAL BUILDING | 1/4" = 1'-0" | 05

KEYNOTES

03.01	LEVEL PLATFORM, REF: STRUCTURAL
07.02	30" X 36" ROOF HATCH
07.04	PRE-MANUFACTURED INTEGRATED FOLDABLE GUARDRAIL
09.01	GALVANIZED STEEL PANEL VISOR, PAINTED
10.02	DIGITAL SCOREBOARD. REFER TO STRUCTURAL AND POOL DRAWINGS, REF: 1/AQ1.11 FOR ATTACHMENT TO STRUCTURE
23.01	HVAC UNIT, REF.: MECHANICAL
23.02	EXHAUST FAN, REF.: MECHANICAL

IDENTIFICATION STAMP
DIV. OF THE STATE ARCHITECT
APP: 02-119490 INC:
REVIEWED FOR
SS ☑ FLS ☑ ACS ☑
DATE: 09/13/2022

LEGEND

- SINGLE PLY (TPA) ROOF WITH CLASS 'A' ROOFING
- METAL DECKING
- TAPERED RIGID INSULATION CRICKET, MIN. 3/8":1'-0" SLOPE
- ROOF DRAIN & OVERFLOW DRAIN - SEE 12/ A8.22

GENERAL NOTES

1. ROOF SLOPE IS 3/8 INCHES PER FOOT.
2. MIN. SLOPE AT VALLEY BETWEEN INTERFACING ROOF PLANES OR CRICKETS IS 1/4 INCHES PER FOOT.
3. CONFIRM MECHANICAL EQUIPMENT PAD DIMENSIONS WITH EQUIPMENT MANUFACTURER. VERIFY PAD SIZE ACCOMMODATES MECHANICAL EQUIPMENT INCLUDING REQUIRED CLEARANCES.
4. MECHANICAL EQUIPMENT SHOWN FOR REFERENCE. REFER TO MECHANICAL DRAWINGS FOR LOCATION AND DIMENSIONS.
5. FOR TYPICAL ROOF PENETRATION DETAILS, SEE 03/ A8.21
6. PROVIDE MITERED CORNER COPING AND COPING SPLICE FLASHING PER SPECIFICATION SECTION 076200.
7. ROOF HATCH, ROOF DRAIN DIMENSIONS ARE TO THE CENTERLINE. COORDINATE ALL LOCATIONS WITH STRUCTURAL FRAMING.
8. TOP OF ROOFING ELEVATIONS ARE APPROXIMATE BASED ON INDICATED SLOPES. FINAL ROOFING ELEVATIONS MAY VARY. TOP OF DECK/CONC. DECK ELEVATIONS ARE INTEDED TO BE COORDINATED WITH TOP OF STEEL. COORDINATE WITH STRUCTURAL DRAWINGS.

KEY PLAN

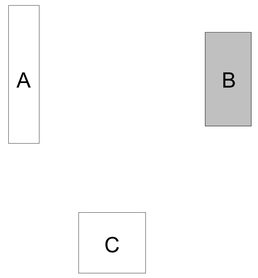

LPA
ARCHITECTURE ENGINEERING INTERIORS
LANDSCAPE ARCHITECTURE PLANNING

916-287-2400 Office
916-287-2401 Fax
LPADesignStudios.com
431 I Street,
Suite 107
Sacramento, California 95814

LICENSED ARCHITECT
YOUNG W. MAS
C-33172
REN. 06-31-23
STATE OF CALIFORNIA

This document and all other project documents, ideas, aesthetics and designs incorporated therein are instruments of service. All project documents are copyright protected, are the property of LPA, Inc. (LPA) and cannot be lawfully used in whole or in part for any project or purpose except as set forth in the contractual agreement between LPA and its Client. The unauthorized disclosure and/or use of the project documents (including the creation of derivative works), may give rise to liability for copyright infringement, unlawful disclosure, use or misappropriation of property rights held by LPA. The unauthorized use of the project documents will give rise to the recovery of monetary losses and damages including attorney fees and costs for which the unauthorized user will be held liable.
Project documents describe the design intent of the work and are not a representation of as-built or existing conditions. LPA is not responsible for any discrepancies between the project documents and the existing conditions.

© LPA, Inc.

DAVIS SR HIGH SCHOOL
AQUATICS CENTER
315 W 14TH ST., DAVIS, CA 95616

Developed for
DAVIS JOINT UNIFIED SCHOOL DISTRICT

Revision	Date

Submittal	Date
50% DD REVIEW	06/15/2021
100% DD SUBMITTAL	07/26/2021
50% CD REVIEW	10/08/2021
100% CD DSA SUBMITTAL	10/22/2021
DSA SUBMITTAL	03/24/2022

Job Number	1904413
Date Published	03/24/2022
Checked By	Checker
Scale	As indicated

ROOF PLAN - POOL MECHANICAL BUILDING

A2.31

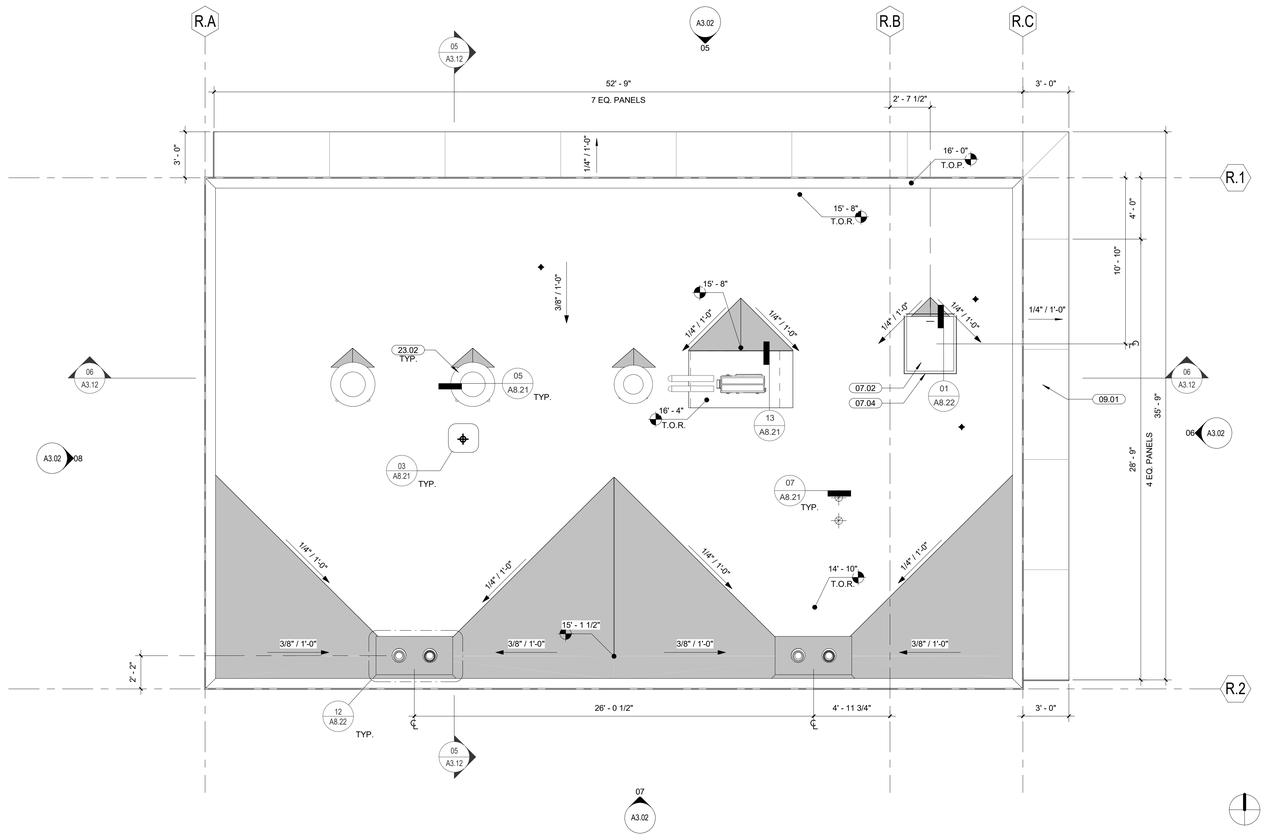

ROOF PLAN - POOL RESTROOM BUILDING | 1/4" = 1'-0" | 05

KEYNOTES

07.02	30" X 36" ROOF HATCH
07.04	PRE-MANUFACTURED INTEGRATED FOLDABLE GUARDRAIL
09.01	GALVANIZED STEEL PANEL VISOR, PAINTED
23.02	EXHAUST FAN, REF.: MECHANICAL

IDENTIFICATION STAMP
DIV. OF THE STATE ARCHITECT
APP: 02-119490 INC:
REVIEWED FOR
SS ☑ FLS ☑ ACS ☑
DATE: 09/13/2022

LEGEND

- SINGLE PLY (TPA) ROOF WITH CLASS 'A' ROOFING
- METAL DECKING
- TAPERED RIGID INSULATION CRICKET, MIN. 3/8":1'-0" SLOPE
- ROOF DRAIN & OVERFLOW DRAIN - SEE 12/ A8.22

GENERAL NOTES

1. ROOF SLOPE IS 3/8 INCHES PER FOOT.
2. MIN. SLOPE AT VALLEY BETWEEN INTERFACING ROOF PLANES OR CRICKETS IS 1/4 INCHES PER FOOT.
3. CONFIRM MECHANICAL EQUIPMENT PAD DIMENSIONS WITH EQUIPMENT MANUFACTURER. VERIFY PAD SIZE ACCOMMODATES MECHANICAL EQUIPMENT INCLUDING REQUIRED CLEARANCES.
4. MECHANICAL EQUIPMENT SHOWN FOR REFERENCE. REFER TO MECHANICAL DRAWINGS FOR LOCATION AND DIMENSIONS.
5. FOR TYPICAL ROOF PENETRATION DETAILS, SEE 03/ A8.21
6. PROVIDE MITERED CORNER COPING AND COPING SPLICE FLASHING PER SPECIFICATION SECTION 076200.
7. ROOF HATCH, ROOF DRAIN DIMENSIONS ARE TO THE CENTERLINE. COORDINATE ALL LOCATIONS WITH STRUCTURAL FRAMING.
8. TOP OF ROOFING ELEVATIONS ARE APPROXIMATE BASED ON INDICATED SLOPES. FINAL ROOFING ELEVATIONS MAY VARY. TOP OF DECK/CONC. DECK ELEVATIONS ARE INTEDED TO BE COORDINATED WITH TOP OF STEEL. COORDINATE WITH STRUCTURAL DRAWINGS.

KEY PLAN

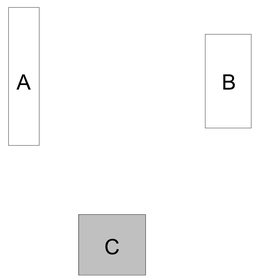

LPA
ARCHITECTURE ENGINEERING INTERIORS
LANDSCAPE ARCHITECTURE PLANNING

916-287-2400 Office
916-287-2401 Fax
LPADesignStudios.com
431 I Street,
Suite 107
Sacramento, California 95814

LICENSED ARCHITECT
YOUNG W. MIN
C-33172
REN: 05-31-23
STATE OF CALIFORNIA

This document and all other project documents, ideas, aesthetics and designs incorporated therein are instruments of service. All project documents are copyright protected, are the property of LPA, Inc. (LPA) and cannot be lawfully used in whole or in part for any project or purpose except as set forth in the contractual agreement between LPA and its Client. The unauthorized disclosure and/or use of the project documents (including the creation of derivative works), may give rise to liability for copyright infringement, unlawful disclosure, use or misappropriation of property rights held by LPA. The unauthorized use of the project documents will give rise to the recovery of monetary losses and damages including attorney fees and costs for which the unauthorized user will be held liable.
Project documents describe the design intent of the work and are not a representation of as-built or existing conditions. LPA is not responsible for any discrepancies between the project documents and the existing conditions.

© LPA, Inc.

DAVIS SR HIGH SCHOOL
AQUATICS CENTER
315 W 14TH ST., DAVIS, CA 95616

Developed for
DAVIS JOINT UNIFIED SCHOOL DISTRICT

Revision	Date

Submittal	Date
50% DD REVIEW	06/15/2021
100% DD SUBMITTAL	07/26/2021
50% CD REVIEW	10/08/2021
100% CD DSA SUBMITTAL	10/22/2021
DSA SUBMITTAL	03/24/2022

Job Number	1904413
Date Published	03/24/2022
Checked By	Checker
Scale	As indicated

ROOF PLAN - POOL RESTROOM BUILDING

A2.32

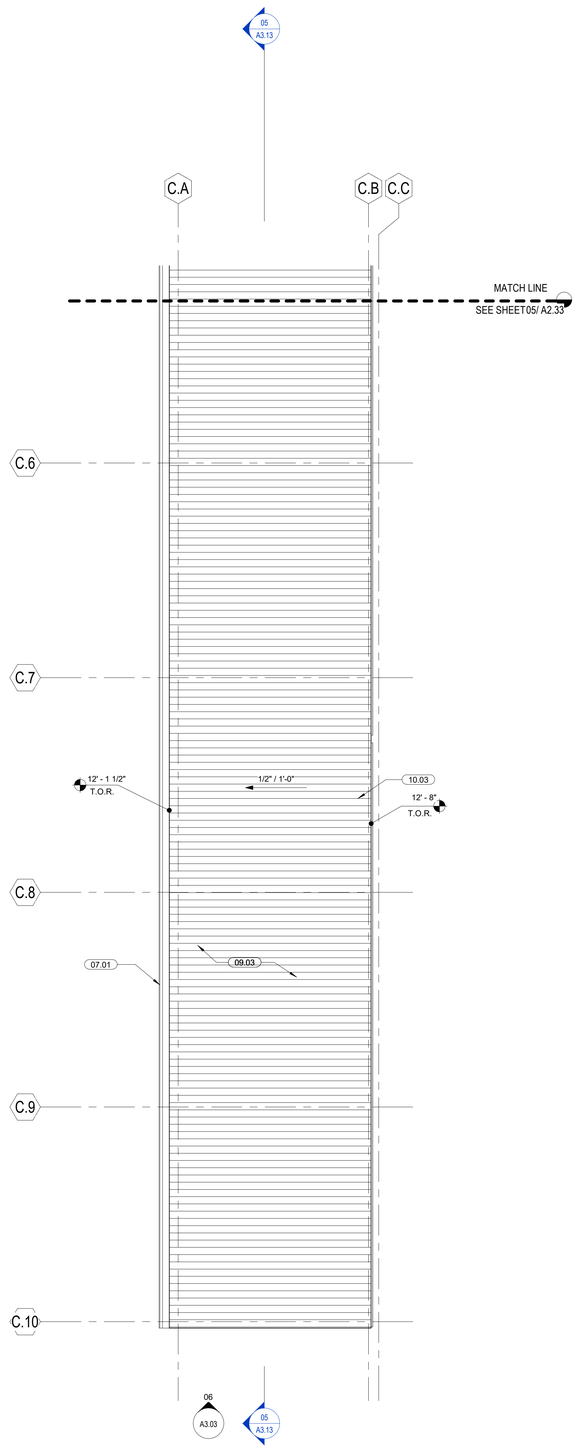

ROOF PLAN - METAL SHADE STRUCTURE - SOUTH | 1/4" = 1'-0" | 17

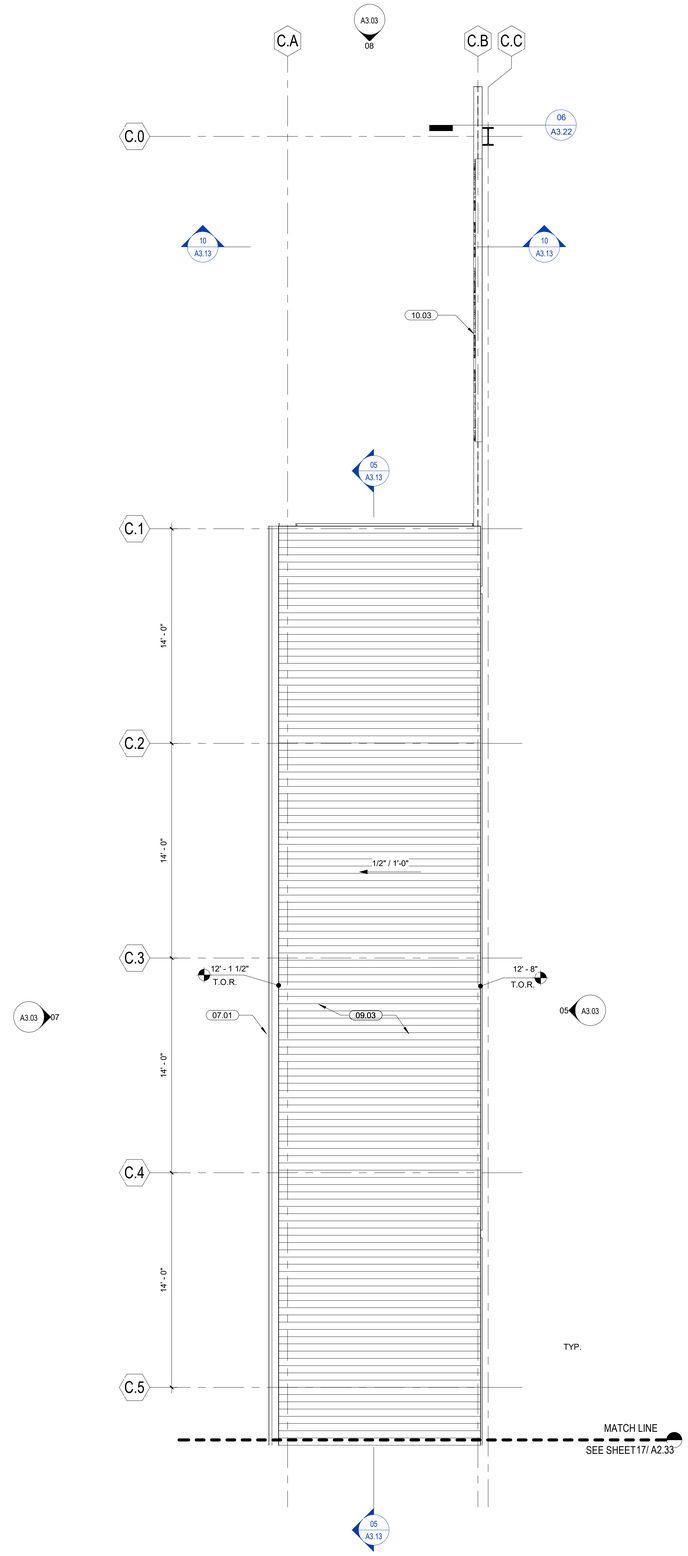

ROOF PLAN - METAL SHADE STRUCTURE - NORTH | 1/4" = 1'-0" | 05

KEYNOTES

07.01	GALVANIZED SHEET METAL GUTTER. FINISH TO MATCH CANOPY STRUCTURE
09.03	FULLY PAINTED STEEL PER EXTERIOR ELEVATION LEGEND
10.03	24" INDIVIDUAL ALUMINUM LETTER SIGNAGE. FONT STYLE TO BE ARIAL

IDENTIFICATION STAMP
DIV. OF THE STATE ARCHITECT
APP: 02-119490 INC:
REVIEWED FOR
SS ☑ FLS ☑ ACS ☑
DATE: 09/13/2022

LEGEND

METAL DECKING

GENERAL NOTES

1. MIN. SLOPE AT VALLEY BETWEEN INTERFACING ROOF PLANES OR CRICKETS IS 1/4 INCHES PER FOOT.
2. CONFIRM MECHANICAL EQUIPMENT PAD DIMENSIONS WITH EQUIPMENT MANUFACTURER. VERIFY PAD SIZE ACCOMMODATES MECHANICAL EQUIPMENT INCLUDING REQUIRED CLEARANCES.
3. MECHANICAL EQUIPMENT SHOWN FOR REFERENCE. REFER TO MECHANICAL DRAWINGS FOR LOCATION AND DIMENSIONS.
4. FOR TYPICAL ROOF PENETRATION DETAILS, SEE
5. PROVIDE MITERED CORNER COPING AND COPING03/ A8.21FLASHING PER SPECIFICATION SECTION 076200.
6. ROOF HATCH, ROOF DRAIN DIMENSIONS ARE TO THE CENTERLINE. COORDINATE ALL LOCATIONS WITH STRUCTURAL FRAMING.
8. TOP OF ROOFING ELEVATIONS ARE APPROXIMATE BASED ON INDICATED SLOPES. FINAL ROOFING ELEVATIONS MAY VARY. TOP OF DECK/CONC. DECK ELEVATIONS ARE INTEDED TO BE COORDINATED WITH TOP OF STEEL. COORDINATE WITH STRUCTURAL DRAWINGS.

KEY PLAN

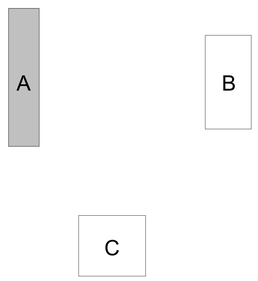

LPA
ARCHITECTURE ENGINEERING INTERIORS
LANDSCAPE ARCHITECTURE PLANNING
916-287-2400 Office
916-287-2401 Fax
LPADesignStudios.com
431 I Street,
Suite 107
Sacramento, California 95814

LICENSED ARCHITECT
DARING WAN
No. C-33172
REN: 05-31-23
STATE OF CALIFORNIA

This document and all other project documents, ideas, aesthetics and designs incorporated therein are instruments of service. All project documents are copyright protected, are the property of LPA, Inc. (LPA) and cannot be lawfully used in whole or in part for any project or purpose except as set forth in the contractual agreement between LPA and its Client. The unauthorized disclosure and/or use of the project documents (including the creation of derivative works), may give rise to liability for copyright infringement, unlawful disclosure, use or misappropriation of property rights held by LPA. The unauthorized use of the project documents will give rise to the recovery of monetary losses and damages including attorney fees and costs for which the unauthorized user will be held liable.
Project documents describe the design intent of the work and are not a representation of as-built or existing conditions. LPA is not responsible for any discrepancies between the project documents and the existing conditions.

© LPA, Inc.

DAVIS SR HIGH SCHOOL
AQUATICS CENTER
315 W 14TH ST., DAVIS, CA 95616

Developed for
DAVIS JOINT UNIFIED SCHOOL DISTRICT

Revision	Date

Submittal	Date
50% DD REVIEW	06/15/2021
100% DD SUBMITTAL	07/26/2021
50% CD REVIEW	10/08/2021
100% CD DSA SUBMITTAL	10/22/2021
DSA SUBMITTAL	03/24/2022

Job Number	1904413
Date Published	03/24/2022
Checked By	Checker
Scale	As indicated

ROOF PLAN - METAL SHADE STRUCTURE

A2.33

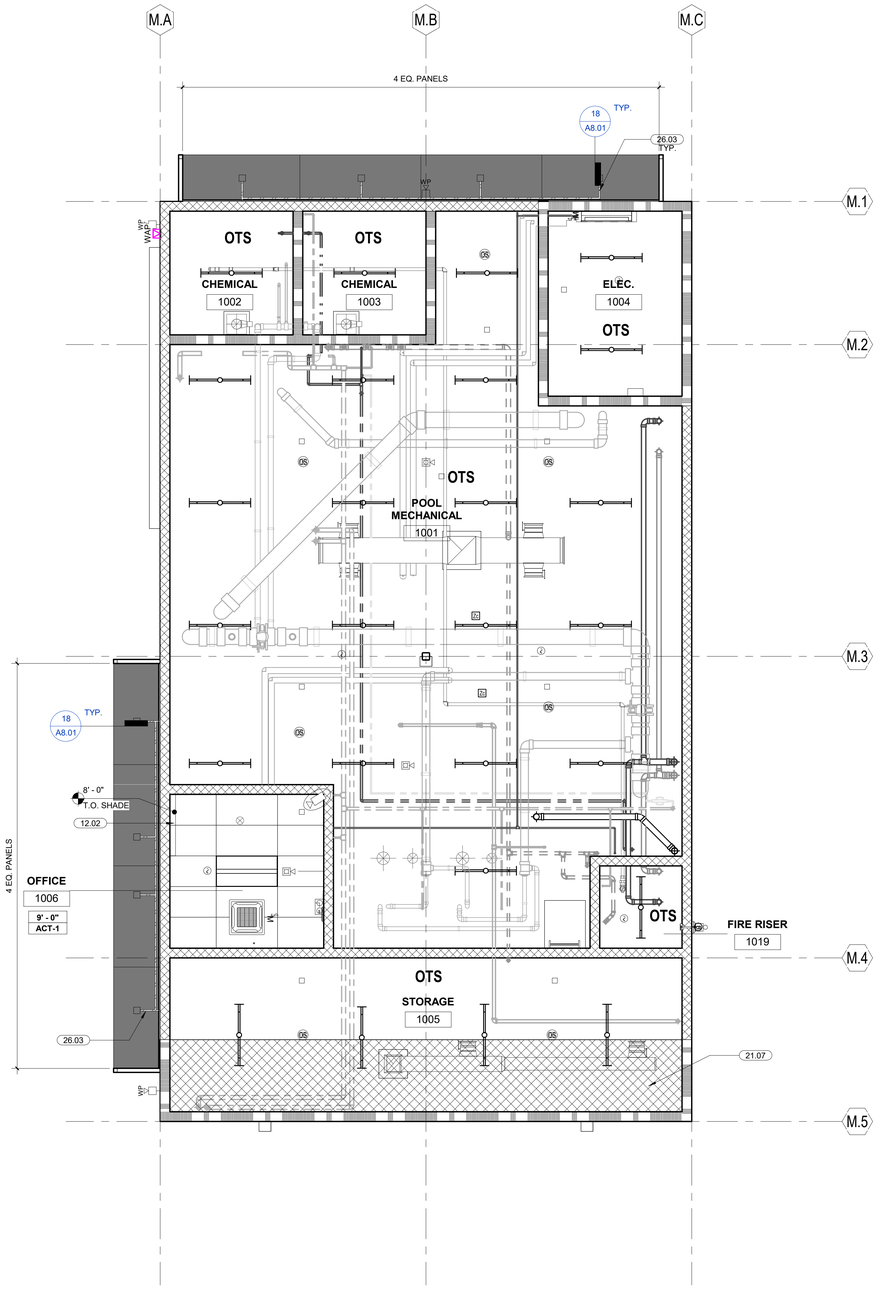

KEYNOTES

12.02	WALL MOUNTED MANUAL WINDOW SHADE
21.07	1-HR RATED SPRAYED FIREPROOF PROTECTION TO UNDERSIDE OF DECK, BEAM AND CONNECTION PLATES
26.03	EXPOSED CONDUIT, FINISH TO MATCH METAL WALL PANEL

IDENTIFICATION STAMP
DIV. OF THE STATE ARCHITECT
APP: 02-119490 INC:
REVIEWED FOR
SS ☑ FLS ☑ ACS ☑
DATE: 09/13/2022

LEGEND

ACT-1	2 X 4 ACOUSTICAL TILE CEILING, ARMSTRONG CALLA SEE DETAIL 01/A9.21
GYP-1	MOISTURE - RESISTANT GYPSUM BOARD CEILING, P-1 U.N.O SEE DETAIL 15/ A9.21 , 19/ A9.21
XX" - XX"	DENOTES CEILING HEIGHT
XXX-X	DENOTES CEILING TYPE
OTS	OPEN TO STRUCTURE ABOVE. ALL VISUALLY EXPOSED METAL ELEMENTS TO BE PAINTED P-2 U.O.N. HIGH PERFORMANCE COATINGS (HPP-1), SUCH AS BUT NOT LIMITED TO STEEL DECK, BEAMS, PLATES, FASTNERS, DUCT WORKS, CABLE TRAYS, PIPING, CONDUITS IN THE POOL PUMP ROOM AND CHEMICAL ROOMS.
	1-HR RATED SPRAYED FIREPROOF PROTECTION TO UNDERSIDE OF DECK, BEAM, AND CONNECTION PLATES. REF: 12/A9.11
	SURFACE MOUNTED/ SUSPENDED LINEAR LIGHT FIXTURE, REF. ELECTRICAL PLANS FOR TYPE
	SURFACE MOUNTED DOWNLIGHT FIXTURE, REF. ELECTRICAL PLANS FOR TYPE
	PERFORATED METAL PANEL. REF: 03/ A8.71

GENERAL NOTES

1. REFER TO ELECTRICAL PLANS FOR LIGHTING FIXTURES AND LOCATIONS.
2. GYPSUM BOARD CEILINGS AND SOFFITS TO BE P1 FLAT FINISH, U.N.O.
3. FOR TYPICAL CEILING MOUNTED DEVICE ALIGMENT, RE: 14/A9.21
4. FOR CEILING FRAMING DIRECTION, REFER TO STRUCTURAL CEILING PLANS

KEY PLAN

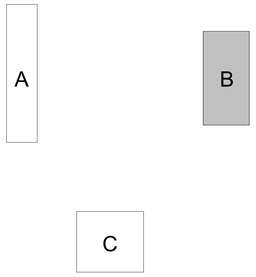

REFLECTED CEILING PLAN - POOL MECHANICAL BUILDING | 1/4" = 1'-0" | 05

LPA
ARCHITECTURE ENGINEERING INTERIORS
LANDSCAPE ARCHITECTURE PLANNING

916-287-2400 Office
916-287-2401 Fax
LPADesignStudios.com
431 I Street,
Suite 107
Sacramento, California 95814

LICENSED ARCHITECT
JUNG W. MIN
C-33172
REN 05-31-23
STATE OF CALIFORNIA

This document and all other project documents, ideas, aesthetics and designs incorporated therein are instruments of service. All project documents are copyright protected, are the property of LPA, Inc. (LPA) and cannot be lawfully used in whole or in part for any project or purpose except as set forth in the contractual agreement between LPA and its Client. The unauthorized disclosure and/or use of the project documents (including the creation of derivative works), may give rise to liability for copyright infringement, unlawful disclosure, use or misappropriation of property rights held by LPA. The unauthorized use of the project documents will give rise to the recovery of monetary losses and damages including attorney fees and costs for which the unauthorized user will be held liable.
Project documents describe the design intent of the work and are not a representation of as-built or existing conditions. LPA is not responsible for any discrepancies between the project documents and the existing conditions.

© LPA, Inc.

DAVIS SR HIGH SCHOOL
AQUATICS CENTER
315 W 14TH ST., DAVIS, CA 95616

Developed for
DAVIS JOINT UNIFIED SCHOOL DISTRICT

Revision	Date

Submittal	Date
50% DD REVIEW	06/15/2021
100% DD SUBMITTAL	07/26/2021
50% CD REVIEW	10/08/2021
100% CD DSA SUBMITTAL	10/22/2021
DSA SUBMITTAL	03/24/2022

Job Number	1904413
Date Published	03/24/2022
Checked By	Checker
Scale	As indicated

REFLECTED CEILING PLAN - POOL MECHANICAL BUILDING

A2.41

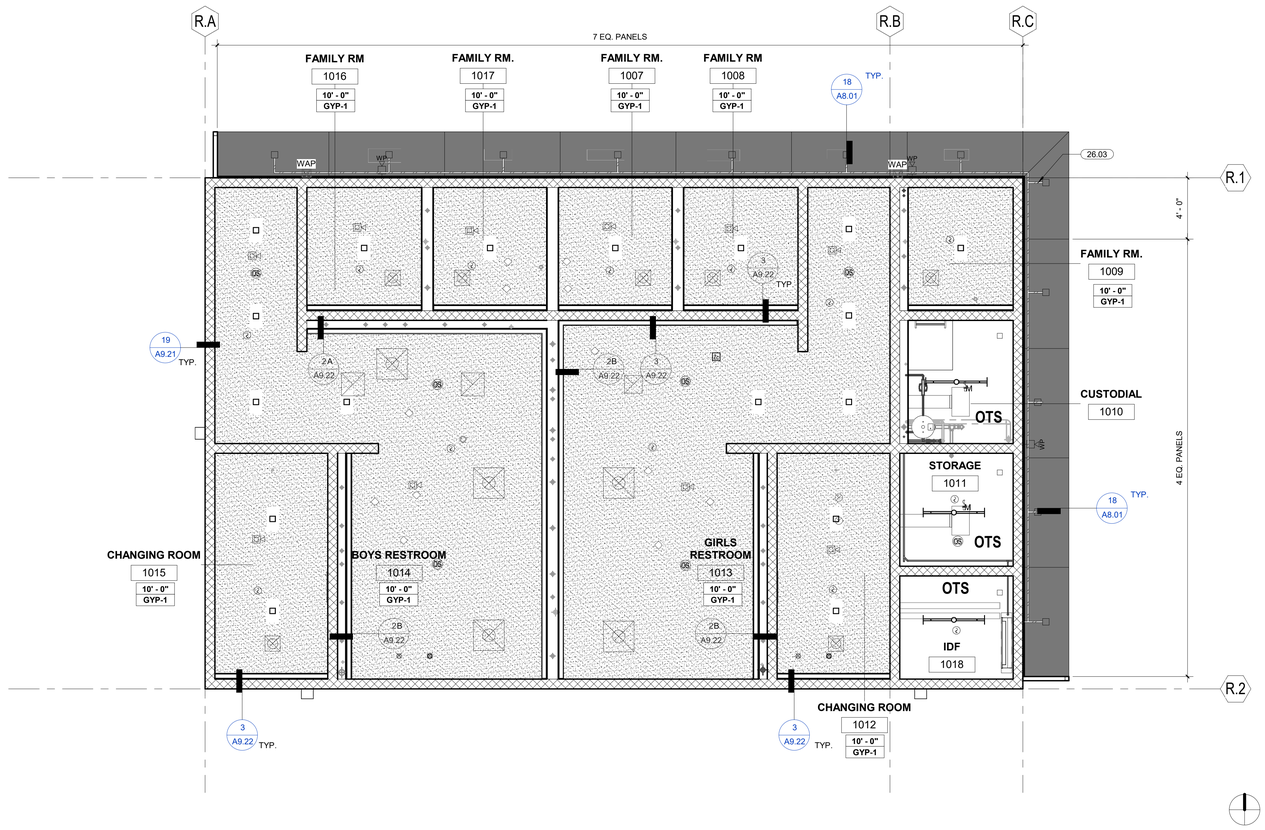

REFLECTED CEILING PLAN - POOL RESTROOM BUILDING | 1/4" = 1'-0" | 05

KEYNOTES

26.03	EXPOSED CONDUIT, FINISH TO MATCH METAL WALL PANEL

IDENTIFICATION STAMP
DIV. OF THE STATE ARCHITECT
APP: 02-119490 INC:
REVIEWED FOR
SS ☑ FLS ☑ ACS ☑
DATE: 09/13/2022

LEGEND

ACT-1	2 X 4 ACOUSTICAL TILE CEILING, ARMSTRONG CALLA SEE DETAIL 01/A9.21
GYP-1	MOISTURE - RESISTANT GYPSUM BOARD CEILING, P-1 U.N.O SEE DETAIL 15/ A9.21, 19/ A9.21
XX" - XX"	DENOTES CEILING HEIGHT
XXX-X	DENOTES CEILING TYPE
OTS	OPEN TO STRUCTURE ABOVE. ALL VISUALLY EXPOSED METAL ELEMENTS TO BE PAINTED P-2 U.O.N. HIGH PERFORMANCE COATINGS (HPP-1), SUCH AS BUT NOT LIMITED TO STEEL DECK, BEAMS, PLATES, FASTNERS, DUCT WORKS, CABLE TRAYS, PIPING, CONDUITS IN THE POOL PUMP ROOM AND CHEMICAL ROOMS.
	1-HR RATED SPRAYED FIREPROOF PROTECTION TO UNDERSIDE OF DECK, BEAM, AND CONNECTION PLATES. REF: 12/A9.11
	SURFACE MOUNTED/ SUSPENDED LINEAR LIGHT FIXTURE, REF. ELECTRICAL PLANS FOR TYPE
	SURFACE MOUNTED DOWNLIGHT FIXTURE, REF. ELECTRICAL PLANS FOR TYPE
	PERFORATED METAL PANEL. REF: 03/ A8.71

GENERAL NOTES

1. REFER TO ELECTRICAL PLANS FOR LIGHTING FIXTURES AND LOCATIONS.
2. GYPSUM BOARD CEILINGS AND SOFFITS TO BE P1 FLAT FINISH, U.N.O.
3. FOR TYPICAL CEILING MOUNTED DEVICE ALIGMENT, RE: 14/A9.21
4. FOR CEILING FRAMING DIRECTION, REFER TO STRUCTURAL CEILING PLANS

KEY PLAN

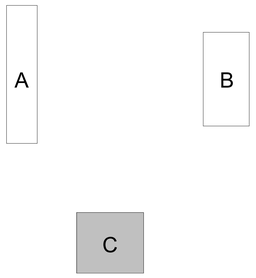

LPA
ARCHITECTURE ENGINEERING INTERIORS
LANDSCAPE ARCHITECTURE PLANNING

916-287-2400 Office
916-287-2401 Fax
LPADesignStudios.com
431 I Street,
Suite 107
Sacramento, California 95814

LICENSED ARCHITECT
YOUNG W. MAH
C-33172
REN 06-31-23
STATE OF CALIFORNIA

This document and all other project documents, ideas, aesthetics and designs incorporated therein are instruments of service. All project documents are copyright protected, are the property of LPA, Inc. (LPA) and cannot be lawfully used in whole or in part for any project or purpose except as set forth in the contractual agreement between LPA and its Client. The unauthorized disclosure and/or use of the project documents (including the creation of derivative works), may give rise to liability for copyright infringement, unlawful disclosure, use or misappropriation of property rights held by LPA. The unauthorized use of the project documents will give rise to the recovery of monetary losses and damages including attorney fees and costs for which the unauthorized user will be held liable.
Project documents describe the design intent of the work and are not a representation of as-built or existing conditions. LPA is not responsible for any discrepancies between the project documents and the existing conditions.

© LPA, Inc.

DAVIS SR HIGH SCHOOL
AQUATICS CENTER
315 W 14TH ST., DAVIS, CA 95616

Developed for
DAVIS JOINT UNIFIED SCHOOL DISTRICT

Revision	Date

Submittal	Date
50% DD REVIEW	06/15/2021
100% DD SUBMITTAL	07/26/2021
90% CD REVIEW	10/08/2021
100% CD DSA SUBMITTAL	10/22/2021
DSA SUBMITTAL	03/24/2022

Job Number	1904413
Date Published	03/24/2022
Checked By	Checker
Scale	As indicated

REFLECTED CEILING PLAN - POOL RESTROOM BUILDING

A2.42

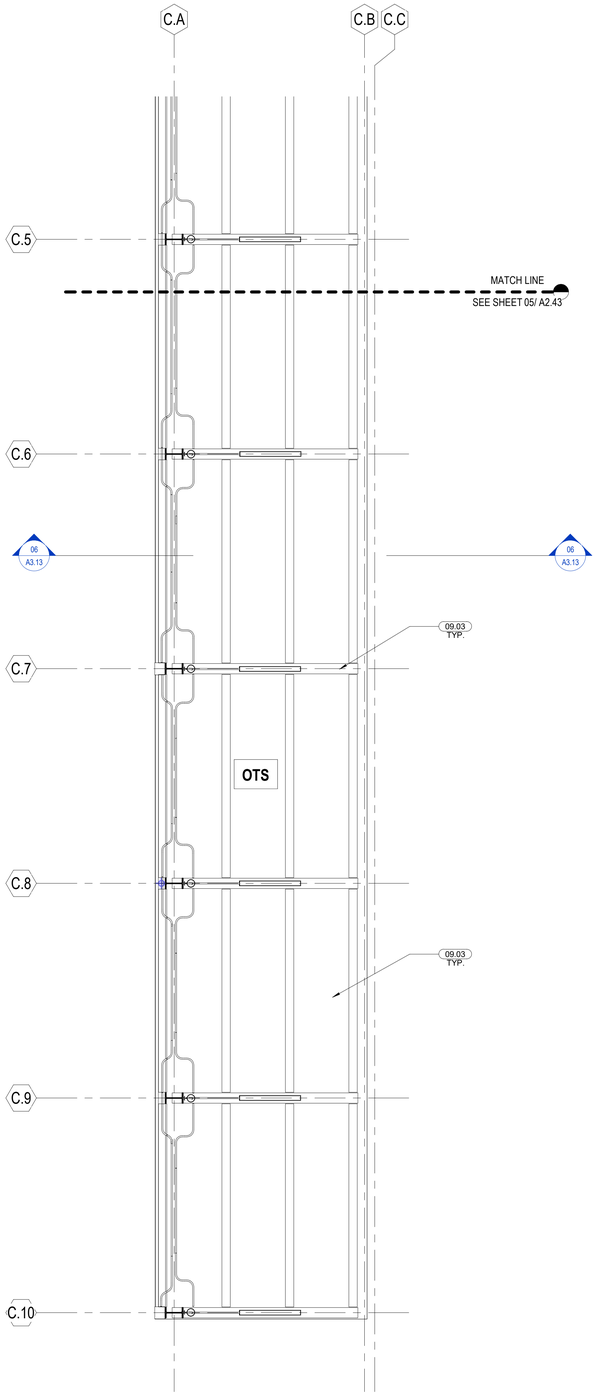

REFLECTED CEILING PLAN - METAL SHADE STRUCTURE - SOUTH | 1/4" = 1'-0" | 17

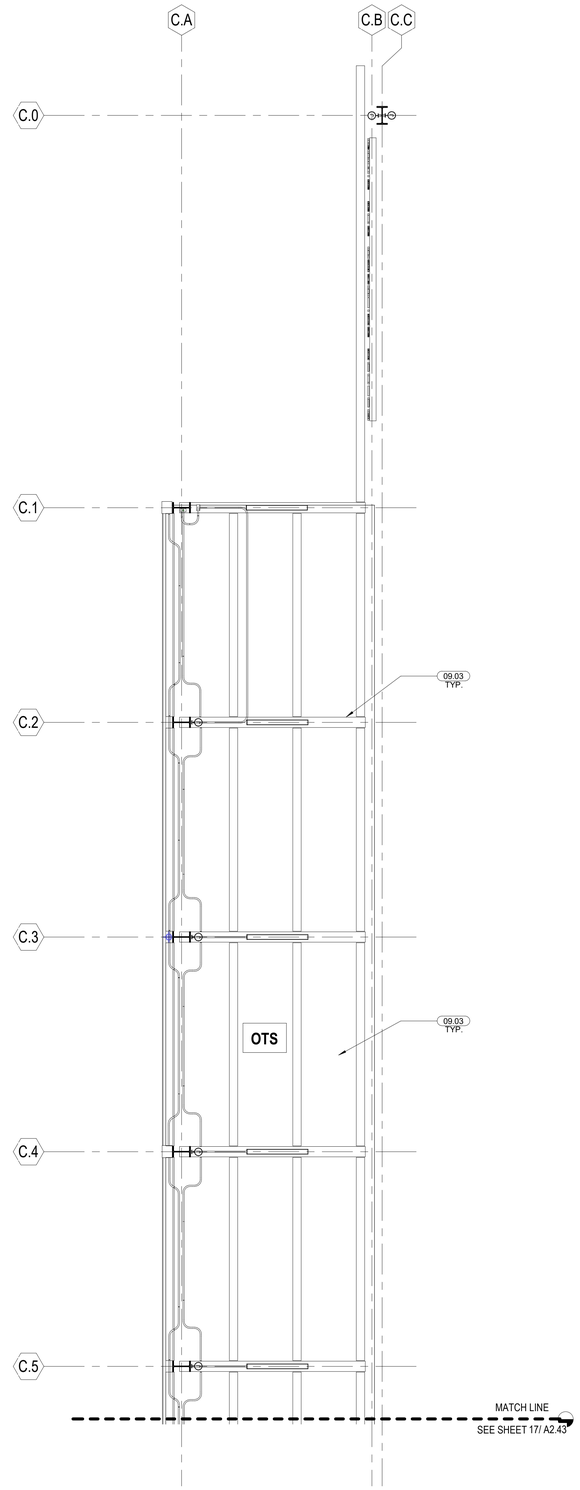

REFLECTED CEILING PLAN - METAL SHADE STRUCTURE - NORTH | 1/4" = 1'-0" | 05

KEYNOTES

09.03	FULLY PAINTED WITH 1-HR INTUMESCENT PAINT

IDENTIFICATION STAMP
DIV. OF THE STATE ARCHITECT
APP: 02-119490 INC:
REVIEWED FOR
SS ☑ FLS ☑ ACS ☑
DATE: 09/13/2022

LEGEND

OTS	OPEN TO STRUCTURE ABOVE. ALL VISUALLY EXPOSED METAL ELEMENTS TO BE PAINTED P-1 U.O.N. HIGH PERFORMANCE COATINGS (HPP-1). SUCH AS BUT NOT LIMITED TO STEEL DECK, BEAMS, PLATES, FASTNERS, DUCT WORKS, AND CABLE TRAYS

GENERAL NOTES

1. REFER TO ELECTRICAL PLANS FOR LIGHTING FIXTURES AND LOCATIONS.
2. GYPSUM BOARD CEILINGS AND SOFFITS TO BE P1 FLAT FINISH, U.N.O.
3. FOR TYPICAL CEILING MOUNTED DEVICE ALIGMENT, RE: 14/A9.21

KEY PLAN

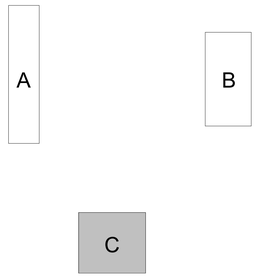

LPA
ARCHITECTURE ENGINEERING INTERIORS
LANDSCAPE ARCHITECTURE PLANNING

916-287-2400 Office
916-287-2401 Fax
LPADesignStudios.com
431 I Street,
Suite 107
Sacramento, California 95814

LICENSED ARCHITECT
JONG W. MIN
C-33172
REN 05-31-23
STATE OF CALIFORNIA

This document and all other project documents, ideas, aesthetics and designs incorporated therein are instruments of service. All project documents are copyright protected, are the property of LPA, Inc. (LPA) and cannot be lawfully used in whole or in part for any project or purpose except as set forth in the contractual agreement between LPA and its Client. The unauthorized disclosure and/or use of the project documents (including the creation of derivative works), may give rise to liability for copyright infringement, unlawful disclosure, use or misappropriation of property rights held by LPA. The unauthorized use of the project documents will give rise to the recovery of monetary losses and damages including attorney fees and costs for which the unauthorized user will be held liable.
Project documents describe the design intent of the work and are not a representation of as-built or existing conditions. LPA is not responsible for any discrepancies between the project documents and the existing conditions.

© LPA, Inc.

DAVIS SR HIGH SCHOOL
AQUATICS CENTER
315 W 14TH ST., DAVIS, CA 95616

Developed for
DAVIS JOINT UNIFIED SCHOOL DISTRICT

Revision	Date

Submittal	Date
50% DD REVIEW	06/15/2021
100% DD SUBMITTAL	07/26/2021
50% CD REVIEW	10/08/2021
100% CD DSA SUBMITTAL	10/22/2021
DSA SUBMITTAL	03/24/2022

Job Number	1904413
Date Published	03/24/2022
Checked By	Checker
Scale	As indicated

REFLECTED CEILING PLAN - METAL SHADE STRUCTURE

A2.43

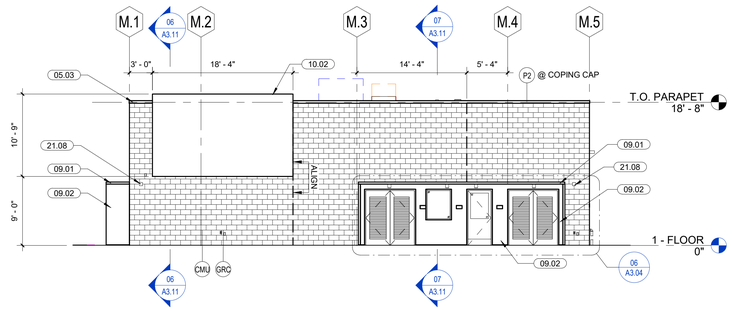

POOL MECHANICAL BUILDING - WEST 1/8" = 1'-0" 08

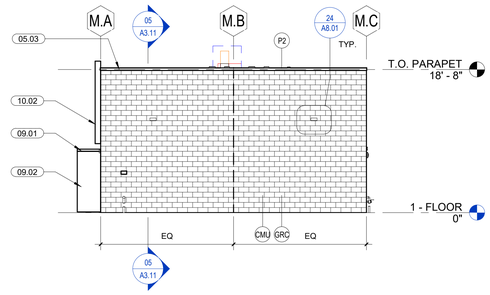

POOL MECHANICAL BUILDING - SOUTH 1/8" = 1'-0" 07

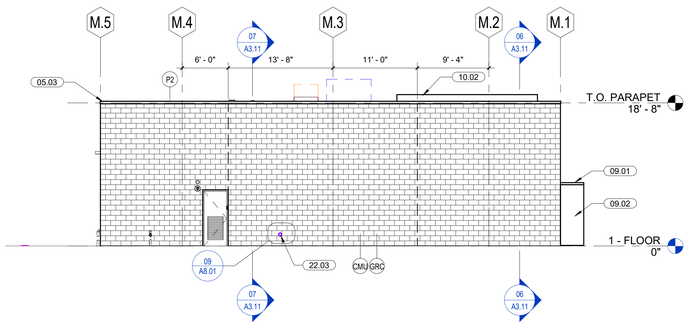

POOL MECHANICAL BUILDING - EAST 1/8" = 1'-0" 06

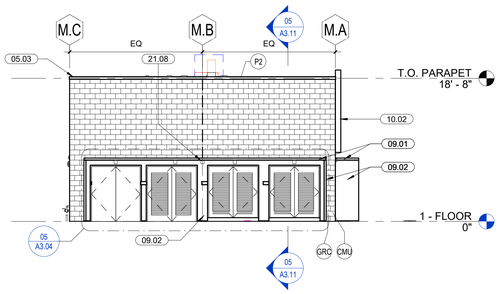

POOL MECHANICAL BUILDING - NORTH 1/8" = 1'-0" 05

KEYNOTES

05.03	G.S.M. COPING CAP, PAINTED
09.01	GALVANIZED STEEL PANEL VISOR, PAINTED
09.02	GALVANIZED STEEL WALL PANEL, PAINTED
10.02	DIGITAL SCOREBOARD. REFER TO STRUCTURAL AND POOL DRAWINGS, REF: 1/AQ1.11 FOR ATTACHMENT TO STRUCTURE
21.08	SURFACE MOUNTED FIRE ALARM. REF.: FIRE ALARM DRAWING
22.03	DOWNSPOUT COVER, REF.: PLUMBING
22.04	SHUT-OFF VALVE, REF.: PLUMBING

IDENTIFICATION STAMP
DIV. OF THE STATE ARCHITECT
APP: 02-119490 INC:
REVIEWED FOR
SS ☑ FLS ☑ ACS ☑
DATE: 09/13/2022

EXTERIOR FINISH SCHEDULE

TYPE MARK	COLOR / FINISH	COMMENTS
WALL FINISHES		
P-1	SHERWIN WILLIAMS, PURE WHITE SW7705	100% ACRYLIC PAINT
P-2	SHERWIN WILLIAMS, MORNING GLORY SW 6971	- PAINT ALL EXPOSED SURFACE AT POOL SEATING CANOPY
		- HIGH PERFORMANCE PANIT ON ALL VISUALLY EXPOSED METAL PANEL
CMU	BASALITE - COLOR : BASE 225, TEXTURE : GROUND FACE	
GRC	PROSOCO INC., BLOK GUARD & GRAFFITI CONTROL	GRAFFITI RESISTANT COATING FOR EXTERNAL MANSONRY
HPP-1	TNEMEC HIGH PERFORMANCE COATING	SEE SPECIFICATION 099600
GLAZING		
IGU1	SOLARBAN, 72 STARPHIRE, CLEAR VISION	STOREFRONT GLAZING
MISC.		
AYC1	FINISH TO MATCH P1	WHITE ACRYLIC

LEGEND

EXTERIOR CMU BLOCK, RUNNING BOND PATTERN, SEE 07/ A8.01

STOREFRONT SYSTEM W/ IGU1 GLAZING, SEE SHEET A6.01

EXTERIOR METAL WALL PANEL, SEE SHEET A8.01 & A8.51

CMU VERTICAL CONTROL JOINT, SEE 01/S6.61

GENERAL NOTES

1. GLAZING MULLIONS TO MATCH P-2
2. PAINT HOLLOW METAL DOOR, DOOR FRAMES WITH P-2
3. PAINT COPTING AND FLASING P-2
4. PAINT ALL ELECTRICAL AND TECHNILOGY DEVICES TO MATCH COLOR OF ADJACENT WALL. DO NOT PAINT FIRE ALARM DEVICES, CARD READERS, AND RECESSED HOSE BIBS.
5. FOR MOUNTING HEIGHTS OF EXTERIOR DEVICES, REFER TO 04/ A8.71

KEY PLAN

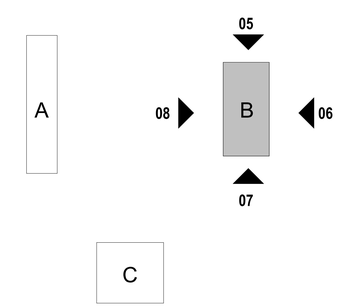

LPA
ARCHITECTURE ENGINEERING INTERIORS
LANDSCAPE ARCHITECTURE PLANNING

916-287-2400 Office
916-287-2401 Fax
LPADesignStudios.com
431 I Street,
Suite 107
Sacramento, California 95814

LICENSED ARCHITECT
ZHONG W. SUN
No. C-33172
SEEN 05-31-22
STATE OF CALIFORNIA

This document and all other project documents, ideas, aesthetics and designs incorporated therein are instruments of service. All project documents are copyright protected, are the property of LPA, Inc. (LPA) and cannot be lawfully used in whole or in part for any project or purpose except as set forth in the contractual agreement between LPA and its Client. The unauthorized disclosure and/or use of the project documents (including the creation of derivative works), may give rise to liability for copyright infringement, unlawful disclosure, use or misappropriation of property rights held by LPA. The unauthorized use of the project documents will give rise to the recovery of monetary losses and damages including attorney fees and costs for which the unauthorized user will be held liable.
Project documents describe the design intent of the work and are not a representation of as-built or existing conditions. LPA is not responsible for any discrepancies between the project documents and the existing conditions.

© LPA, Inc.

DAVIS SR HIGH SCHOOL AQUATICS CENTER
315 W 14TH ST., DAVIS, CA 95616

Developed for
DAVIS JOINT UNIFIED SCHOOL DISTRICT

Revision	Date

Submittal	Date
50% DD REVIEW	06/15/2021
100% DD SUBMITTAL	07/26/2021
50% CD REVIEW	10/08/2021
100% CD DSA SUBMITTAL	10/22/2021
DSA SUBMITTAL	03/24/2022

Job Number	1904413
Date Published	03/24/2022
Checked By	Checker
Scale	1/8" = 1'-0"

EXTERIOR ELEVATIONS - POOL MECHANICAL BUILDING

A3.01

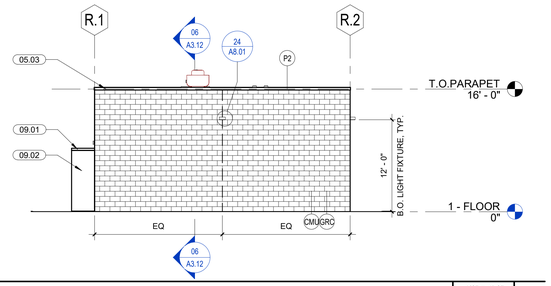

POOL RESTROOM BUILDING - WEST | 1/8" = 1'-0" | 08

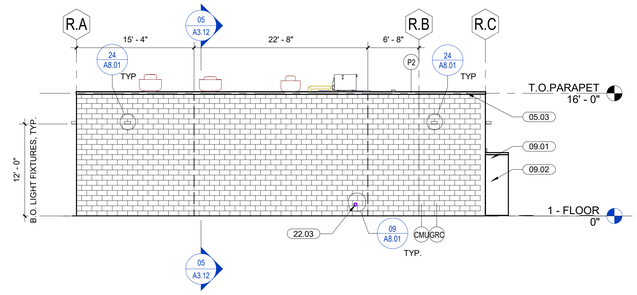

POOL RESTROOM BUILDING - SOUTH | 1/8" = 1'-0" | 07

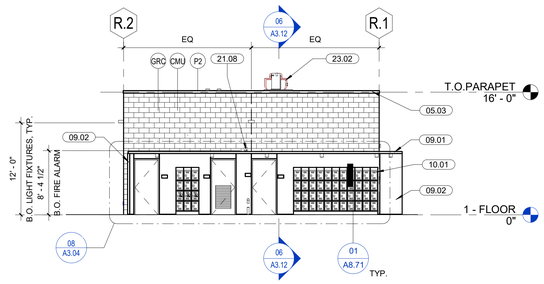

POOL RESTROOM BUILDING - EAST | 1/8" = 1'-0" | 06

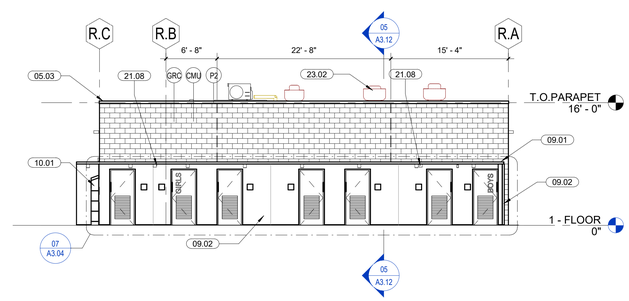

POOL RESTROOM BUILDING - NORTH | 1/8" = 1'-0" | 05

KEYNOTES

05.03	G.S.M. COPING CAP, PAINTED
09.01	GALVANIZED STEEL PANEL VISOR, PAINTED
09.02	GALVANIZED STEEL WALL PANEL, PAINTED
10.01	LOCKER. FINISH TO MATCH P2
21.08	SURFACE MOUNTED FIRE ALARM, REF.: FIRE ALARM DRAWING
22.03	DOWNSPOUT COVER, REF.: PLUMBING
23.02	EXHAUST FAN, REF.: MECHANICAL

IDENTIFICATION STAMP
DIV. OF THE STATE ARCHITECT
APP: 02-119490 INC:
REVIEWED FOR
SS ☑ FLS ☑ ACS ☑
DATE: 09/13/2022

EXTERIOR FINISH SCHEDULE

TYPE MARK	COLOR / FINISH	COMMENTS
WALL FINISHES		
P-1	SHERWIN WILLIAMS, PURE WHITE SW7705	100% ACRYLIC PAINT
P-2	SHERWIN WILLIAMS, MORNING GLORY SW 6971	- PAINT ALL EXPOSED SURFACE AT POOL SEATING CANOPY
		- HIGH PERFORMANCE PANIT ON ALL VISUALLY EXPOSED METAL PANEL
CMU	BASALITE - COLOR : BASE 225, TEXTURE : GROUND FACE	
GRC	PROSOCO INC., BLOK GUARD & GRAFFITI CONTROL	GRAFFITI RESISTANT COATING FOR EXTERNAL MANSONRY
HPP-1	TNEMEC HIGH PERFORMANCE COATING	SEE SPECIFICATION 099600
GLAZING		
IGU1	SOLARBAN, 72 STARPHIRE, CLEAR VISION	STOREFRONT GLAZING
MISC.		
AYC1	FINISH TO MATCH P1	WHITE ACRYLIC

LEGEND

EXTERIOR CMU BLOCK, RUNNING BOND PATTERN, SEE 07/ A8.01

STOREFRONT SYSTEM W/ IGU1 GLAZING, SEE SHEET A6.01

EXTERIOR METAL WALL PANEL, SEE SHEET A8.01 & A8.51

CMU VERTICAL CONTROL JOINT, SEE 01/S6.61

LOCKER

TOTAL NUMBER OF LOCKER	: 52
5% OF LOCKERS PROVIDED TO BE COMPLY WITH CBC SECTION 11B-803	: 2.6
NUMBER OF LOCKERS PROVIDED TO BE COMPLY WITH CBC SECTION 11B-803	: 3

GENERAL NOTES

1. GLAZING MULLIONS TO MATCH P-2
2. PAINT HOLLOW METAL DOOR, DOOR FRAMES WITH P-2
3. PAINT COPTING AND FLASING P-2
4. PAINT ALL ELECTRICAL AND TECHNILOGY DEVICES TO MATCH COLOR OF ADJACENT WALL. DO NOT PAINT FIRE ALARM DEVICES, CARD READERS, AND RECESSED HOSE BIBS.
5. FOR MOUNTING HEIGHTS OF EXTERIOR DEVICES, REFER TO 04/ A8.71

KEY PLAN

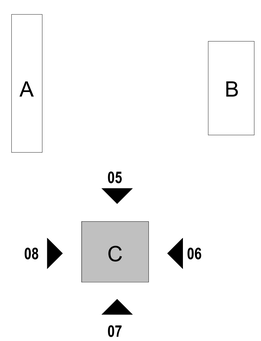

LPA
ARCHITECTURE ENGINEERING INTERIORS
LANDSCAPE ARCHITECTURE PLANNING

916-287-2400 Office
916-287-2401 Fax
LPADesignStudios.com
431 I Street,
Suite 107
Sacramento, California 95814

LICENSED ARCHITECT
MINING W. KAI
C-33172
REN 09-30-22
STATE OF CALIFORNIA

This document and all other project documents, ideas, aesthetics and designs incorporated therein are instruments of service. All project documents are copyright protected, are the property of LPA, Inc. (LPA) and cannot be lawfully used in whole or in part for any project or purpose except as set forth in the contractual agreement between LPA and its Client. The unauthorized disclosure and/or use of the project documents (including the creation of derivative works), may give rise to liability for copyright infringement, unlawful disclosure, use or misappropriation of property rights held by LPA. The unauthorized use of the project documents will give rise to the recovery of monetary losses and damages including attorney fees and costs for which the unauthorized user will be held liable.
Project documents describe the design intent of the work and are not a representation of as-built or existing conditions. LPA is not responsible for any discrepancies between the project documents and the existing conditions.

© LPA, Inc.

DAVIS SR HIGH SCHOOL
AQUATICS CENTER
315 W 14TH ST., DAVIS, CA 95616

Developed for
DAVIS JOINT UNIFIED SCHOOL DISTRICT

Revision	Date

Submittal	Date
50% DD REVIEW	06/15/2021
100% DD SUBMITTAL	07/26/2021
50% CD REVIEW	10/08/2021
100% CD DSA SUBMITTAL	10/22/2021
DSA SUBMITTAL	03/24/2022

Job Number	1904413
Date Published	03/24/2022
Checked By	Checker
Scale	1/8" = 1'-0"

EXTERIOR ELEVATIONS - POOL RESTROOM BUILDING

A3.02

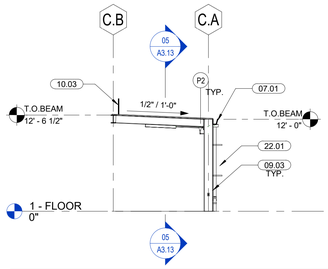

METAL SHADE STRUCTURE - NORTH | 1/8" = 1'-0" | 08

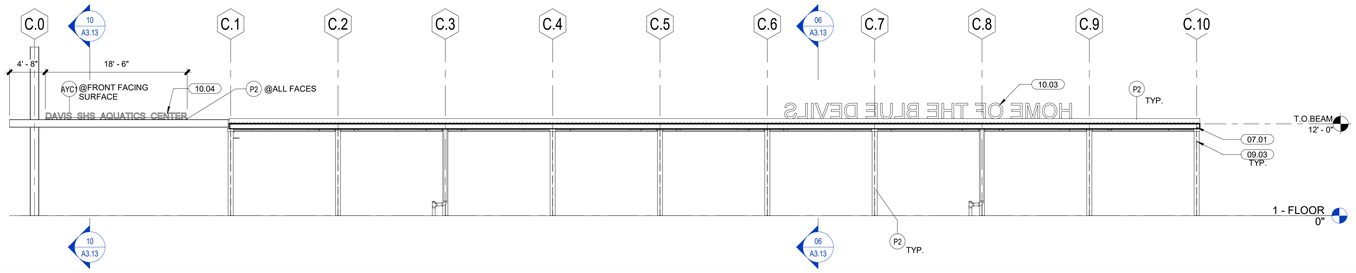

METAL SHADE STRUCTURE - WEST | 1/8" = 1'-0" | 07

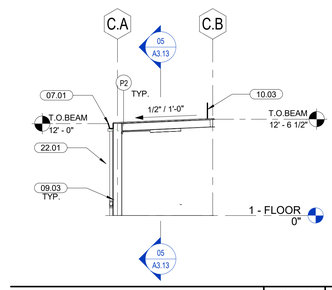

METAL SHADE STRUCTURE - SOUTH | 1/8" = 1'-0" | 06

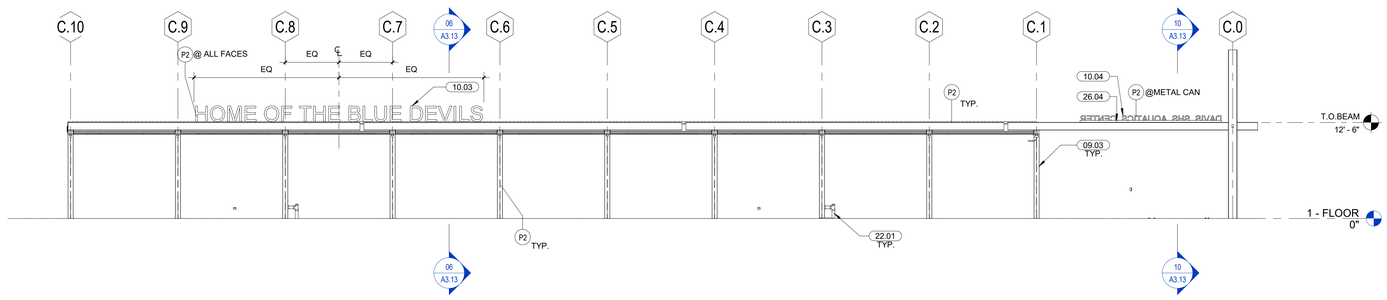

METAL SHADE STRUCTURE - EAST | 1/8" = 1'-0" | 05

KEYNOTES

07.01	GALVANIZED SHEET METAL GUTTER. FINISH TO MATCH CANOPY STRUCTURE
09.03	FULLY PAINTED STEEL PER EXTERIOR ELEVATION LEGEND
10.03	24" INDIVIDUAL ALUMINUM LETTER SIGNAGE. FONT STYLE TO BE ARIAL
10.04	10" INDIVIDUAL INTERNALLY ILLUMINATED METAL CAN LETTER SIGNAGE. FONT STYLE TO BE ARIAL
22.01	4" STEEL TUBE DOWNSPOUT. PAINT TO MATCH STEEL COLUMN
26.04	SIGNAGE POWER RACEWAY FINISH TO MATCH STRUCTURAL STEEL. REF. ELEC DRAWING

IDENTIFICATION STAMP
DIV. OF THE STATE ARCHITECT
APP: 02-119490 INC:
REVIEWED FOR
SS ☑ FLS ☑ ACS ☑
DATE: 09/13/2022

EXTERIOR FINISH SCHEDULE

TYPE MARK	COLOR / FINISH	COMMENTS
WALL FINISHES		
P-1	SHERWIN WILLIAMS, PURE WHITE SW7705	100% ACRYLIC PAINT
P-2	SHERWIN WILLIAMS, MORNING GLORY SW 6971	- PAINT ALL EXPOSED SURFACE AT POOL SEATING CANOPY
		- HIGH PERFORMANCE PANIT ON ALL VISUALLY EXPOSED METAL PANEL
CMU	BASALITE - COLOR : BASE 225, TEXTURE : GROUND FACE	
GRC	PROSOCO INC., BLOK GUARD & GRAFFITI CONTROL	GRAFFITI RESISTANT COATING FOR EXTERNAL MANSONRY
HPP-1	TNEMEC HIGH PERFORMANCE COATING	SEE SPECIFICATION 099600
GLAZING		
IGU1	SOLARBAN, 72 STARPHIRE, CLEAR VISION	STOREFRONT GLAZING
MISC.		
AYC1	FINISH TO MATCH P1	WHITE ACRYLIC

KEY PLAN

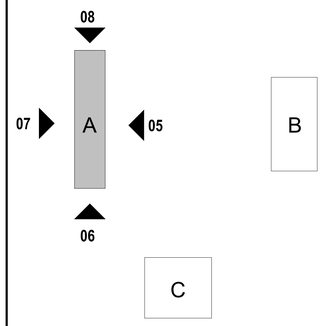

LPA
ARCHITECTURE ENGINEERING INTERIORS
LANDSCAPE ARCHITECTURE PLANNING

916-287-2400 Office
916-287-2401 Fax
LPADesignStudios.com
431 I Street,
Suite 107
Sacramento, California 95814

LICENSED ARCHITECT
CHENG YI MIN
C-33172
REN 06-31-23
STATE OF CALIFORNIA

This document and all other project documents, ideas, aesthetics and designs incorporated therein are instruments of service. All project documents are copyright protected, are the property of LPA, Inc. (LPA) and cannot be lawfully used in whole or in part for any project or purpose except as set forth in the contractual agreement between LPA and its Client. The unauthorized disclosure and/or use of the project documents (including the creation of derivative works), may give rise to liability for copyright infringement, unlawful disclosure, use or misappropriation of property rights held by LPA. The unauthorized use of the project documents will give rise to the recovery of monetary losses and damages including attorney fees and costs for which the unauthorized user will be held liable.
Project documents describe the design intent of the work and are not a representation of as-built or existing conditions. LPA is not responsible for any discrepancies between the project documents and the existing conditions.

© LPA, Inc.

DAVIS SR HIGH SCHOOL
AQUATICS CENTER
315 W 14TH ST., DAVIS, CA 95616

Developed for
DAVIS JOINT UNIFIED SCHOOL DISTRICT

Revision	Date

Submittal	Date
50% DD REVIEW	06/15/2021
100% DD SUBMITTAL	07/26/2021
50% CD REVIEW	10/08/2021
100% CD DSA SUBMITTAL	10/22/2021
DSA SUBMITTAL	03/24/2022

Job Number	1904413
Date Published	03/24/2022
Checked By	Checker
Scale	1/8" = 1'-0"

EXTERIOR ELEVATIONS - METAL SHADE STRUCTURE

A3.03

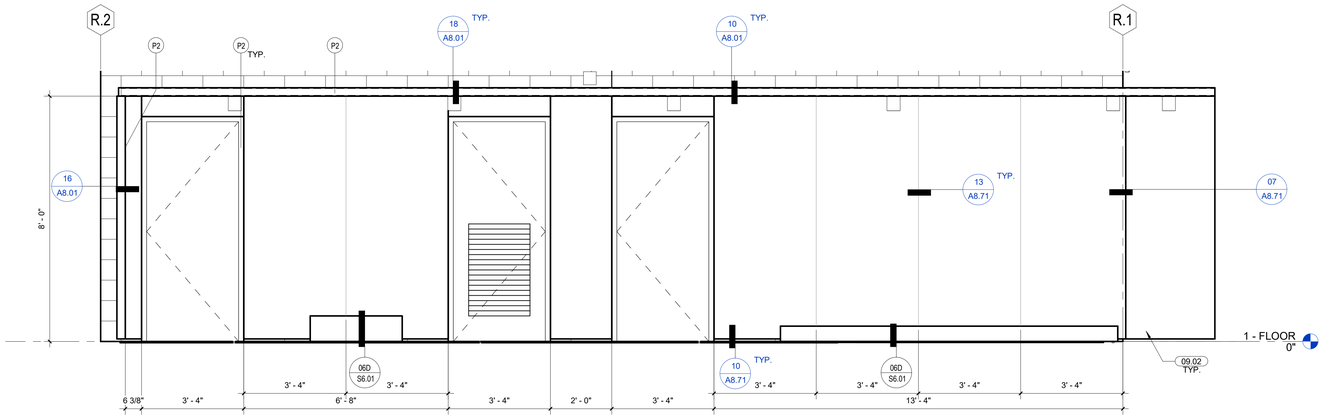

ENLARGED POOL RESTROOM BUILDING - WEST 1/2" = 1'-0" 08

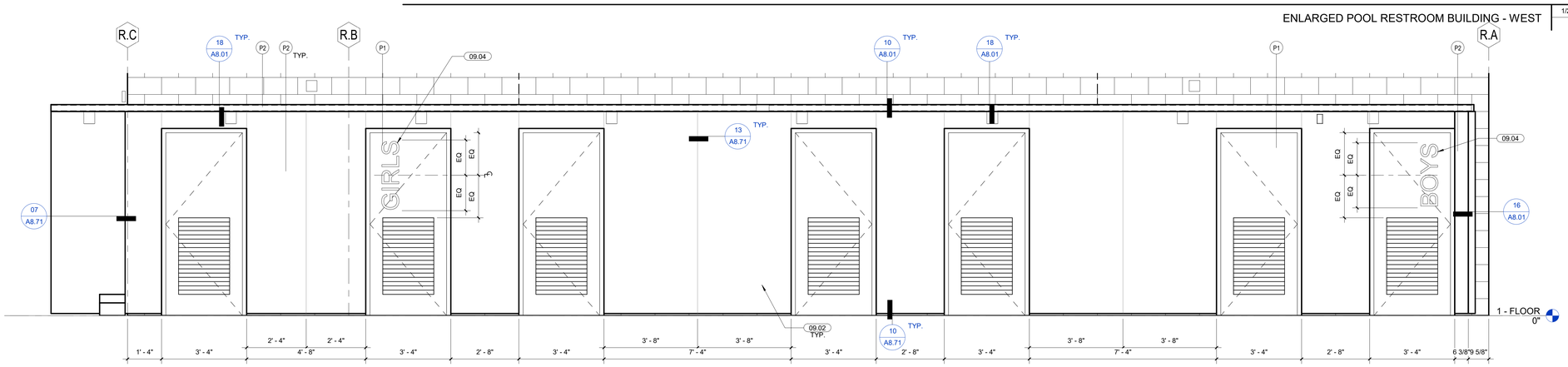

ENLARGED POOL RESTROOM BUILDING - NORTH 1/2" = 1'-0" 07

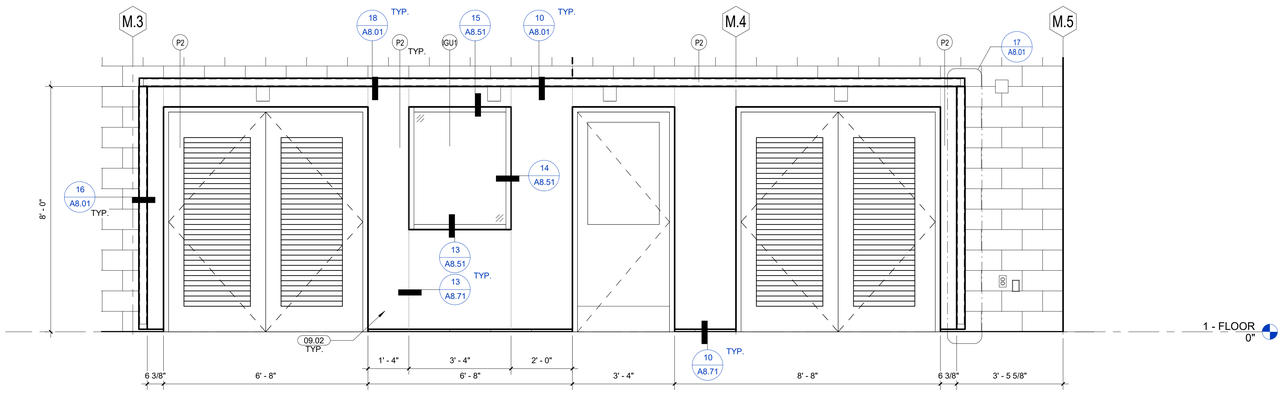

ENLARGED POOL MECHANICAL BUILDING - WEST 1/2" = 1'-0" 06

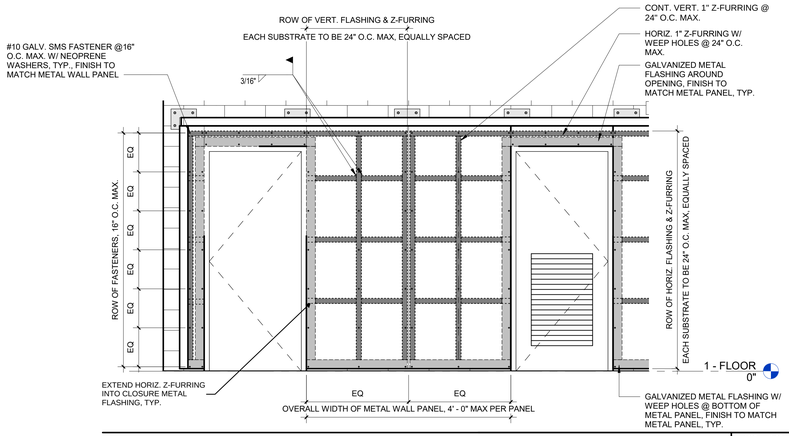

TYP. Z FURRING LAYOUT 1/2" = 1'-0" 17

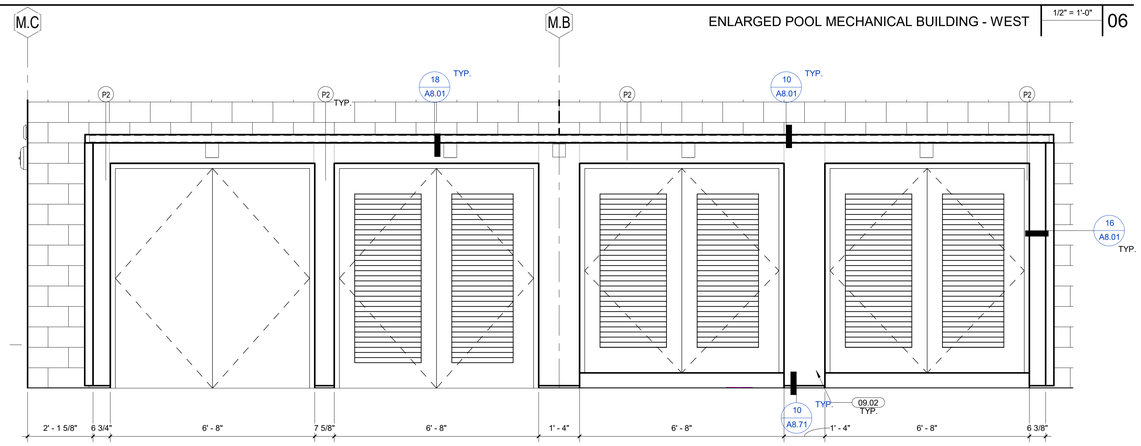

ENLARGED POOL MECHANICAL BUILDING - NORTH 1/2" = 1'-0" 05

KEYNOTES

09.02	GALVANIZED STEEL WALL PANEL, PAINTED
09.04	8" INDIVIDUAL PAINTED LETTER SIGNAGE. FONT STYLE TO BE ARIAL

IDENTIFICATION STAMP
DIV. OF THE STATE ARCHITECT
APP: 02-119490 INC:
REVIEWED FOR
SS ☑ FLS ☑ ACS ☑
DATE: 09/13/2022

EXTERIOR FINISH SCHEDULE

TYPE MARK	COLOR / FINISH	COMMENTS
WALL FINISHES		
P-1	SHERWIN WILLIAMS, PURE WHITE SW7705	100% ACRYLIC PAINT
P-2	SHERWIN WILLIAMS, MORNING GLORY SW 6971	- PAINT ALL EXPOSED SURFACE WITH 1-HR RATED INTUMESCENT PAINT AT POOL SEATING CANOPY
		- HIGH PERFORMANCE PANT ON ALL VISUALLY EXPOSED METAL PANEL
CMU	BASALITE - COLOR : BASE 225, TEXTURE : GROUND FACE	
GRC	PROSOCO INC., BLOK GUARD & GRAFFITI CONTROL	GRAFFITI RESISTANT COATING FOR EXTERNAL MANSONRY
GLAZING		
IGU1	SOLARBAN, 72 STARPHIRE, CLEAR VISION	STOREFRONT GLAZING
MISC.		
AYC1	FINISH TO MATCH P1	WHITE ACRYLIC

LEGEND

EXTERIOR CMU BLOCK, RUNNING BOND PATTERN, SEE 07/ A8.01

STOREFRONT SYSTEM W/ IGU1 GLAZING, SEE SHEET A6.01

EXTERIOR METAL WALL PANEL, SEE SHEET A8.01 & A8.51

CMU VERTICAL CONTROL JOINT, SEE 01/S6.61

GENERAL NOTES

1. GLAZING MULLIONS TO MATCH P-2
2. PAINT HOLLOW METAL DOOR, DOOR FRAMES WITH P-2
3. PAINT COPTING AND FLASING P-2
4. PAINT ALL ELECTRICAL AND TECHNILOGY DEVICES TO MATCH COLOR OF ADJACENT WALL. DO NOT PAINT FIRE ALARM DEVICES, CARD READERS, AND RECESSED HOSE BIBS.
5. FOR MOUNTING HEIGHTS OF EXTERIOR DEVICES, REFER TO 04/ A8.71

KEY PLAN

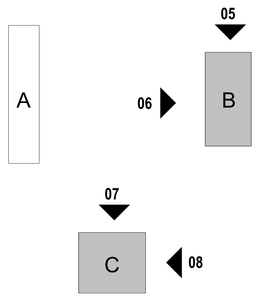

LPA
ARCHITECTURE ENGINEERING INTERIORS
LANDSCAPE ARCHITECTURE PLANNING

916-287-2400 Office
916-287-2401 Fax
LPADesignStudios.com
431 I Street,
Suite 107
Sacramento, California 95814

LICENSED ARCHITECT CRAIG W. MILLER C-33172 REN 05-31-23 STATE OF CALIFORNIA

This document and all other project documents, ideas, aesthetics and designs incorporated therein are instruments of service. All project documents are copyright protected, are the property of LPA, Inc. (LPA) and cannot be lawfully used in whole or in part for any project or purpose except as set forth in the contractual agreement between LPA and its Client. The unauthorized disclosure and/or use of the project documents (including the creation of derivative works), may give rise to liability for copyright infringement, unlawful disclosure, use or misappropriation of property rights held by LPA. The unauthorized use of the project documents will give rise to the recovery of monetary losses and damages including attorney fees and costs for which the unauthorized user will be held liable.
Project documents describe the design intent of the work and are not a representation of as-built or existing conditions. LPA is not responsible for any discrepancies between the project documents and the existing conditions.

© LPA, Inc.

DAVIS SR HIGH SCHOOL AQUATICS CENTER
315 W 14TH ST., DAVIS, CA 95616

Developed for
DAVIS JOINT UNIFIED SCHOOL DISTRICT

Revision	Date

Submittal	Date
50% DD REVIEW	06/15/2021
100% DD SUBMITTAL	07/26/2021
50% CD REVIEW	10/08/2021
100% CD DSA SUBMITTAL	10/22/2021
DSA SUBMITTAL	03/24/2022

Job Number	1904413
Date Published	03/24/2022
Checked By	Checker
Scale	As indicated

ENLARGED EXTERIOR ELEVATIONS

A3.04

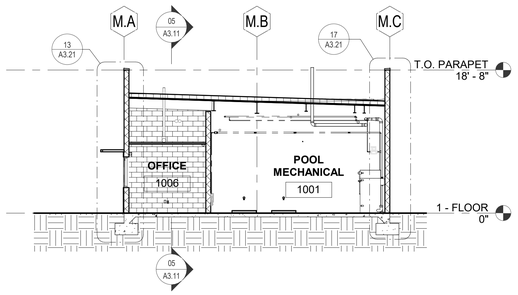

BUILDING SECTION - EW | 1/8" = 1'-0" | 07

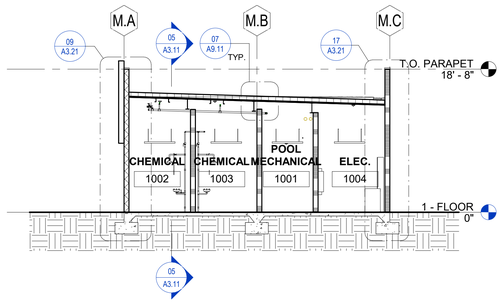

BUILDING SECTION - EW | 1/8" = 1'-0" | 06

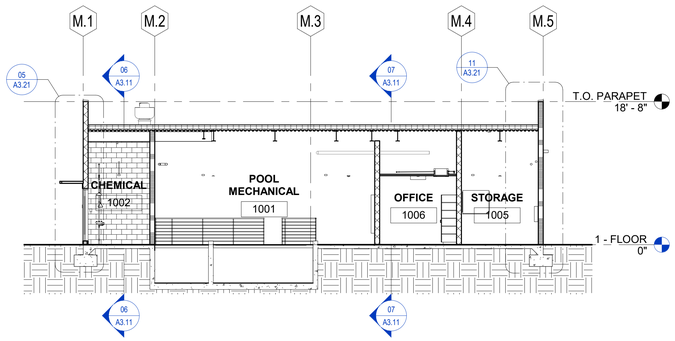

BUILDING SECTION - NS | 1/8" = 1'-0" | 05

KEYNOTES

LEGEND

GENERAL NOTES

1. FOR CMU WALL ASSEMBLY SEE, 03/ A8.01
2. CONTRACTOR SHALL REVIEW COMPLETE SET OF CONSTRUCTION DOCUMENTS AND COORDINATE SOW WITHIN ALL DISCIPLINES

KEY PLAN

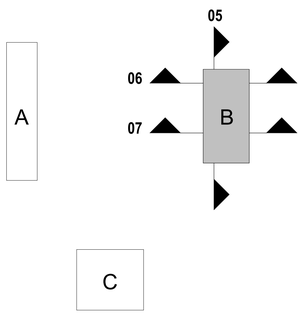

IDENTIFICATION STAMP
DIV. OF THE STATE ARCHITECT
APP: 02-119490 INC:
REVIEWED FOR
SS ☑ FLS ☑ ACS ☑
DATE: 09/13/2022

LPA

ARCHITECTURE ENGINEERING INTERIORS
LANDSCAPE ARCHITECTURE PLANNING

916-287-2400 Office

916-287-2401 Fax

LPADesignStudios.com

431 I Street,
Suite 107
Sacramento, California 95814

LICENSED ARCHITECT
LANDING W. M.N.
No. C-33172
REN 05-31-23
STATE OF CALIFORNIA

This document and all other project documents, ideas, aesthetics and designs incorporated therein are instruments of service. All project documents are copyright protected, are the property of LPA, Inc. (LPA) and cannot be lawfully used in whole or in part for any project or purpose except as set forth in the contractual agreement between LPA and its Client. The unauthorized disclosure and/or use of the project documents (including the creation of derivative works), may give rise to liability for copyright infringement, unlawful disclosure, use or misappropriation of property rights held by LPA. The unauthorized use of the project documents will give rise to the recovery of monetary losses and damages including attorney fees and costs for which the unauthorized user will be held liable.
Project documents describe the design intent of the work and are not a representation of as-built or existing conditions. LPA is not responsible for any discrepancies between the project documents and the existing conditions.

© LPA, Inc.

DAVIS SR HIGH SCHOOL
AQUATICS CENTER
315 W 14TH ST., DAVIS, CA 95616

Developed for
DAVIS JOINT UNIFIED SCHOOL DISTRICT

Revision	Date

Submittal	Date
50% DD REVIEW	06/15/2021
100% DD SUBMITTAL	07/26/2021
50% CD REVIEW	10/08/2021
100% CD DSA SUBMITTAL	10/22/2021
DSA SUBMITTAL	03/24/2022

Job Number	1904413
Date Published	03/24/2022
Checked By	Checker
Scale	1/8" = 1'-0"

BUILDING SECTIONS - POOL MECHANICAL BUILDING

A3.11

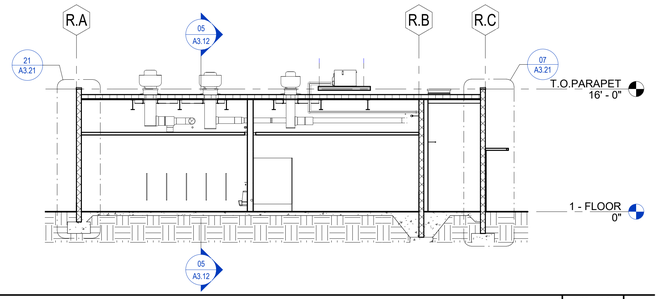

BUILDING SECTION - EW 1/8" = 1'-0" 06

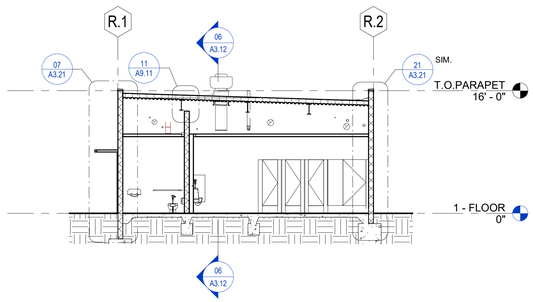

BUILDING SECTION - NS 1/8" = 1'-0" 05

KEYNOTES

IDENTIFICATION STAMP
DIV. OF THE STATE ARCHITECT
APP: 02-119490 INC:
REVIEWED FOR
SS ☑ FLS ☑ ACS ☑
DATE: 09/13/2022

LEGEND

GENERAL NOTES

1. FOR CMU WALL ASSEMBLY SEE, 03/ A8.01
2. CONTRACTOR SHALL REVIEW COMPLETE SET OF CONSTRUCTION DOCUMENTS AND COORDINATE SOW WITHIN ALL DISCIPLINES

KEY PLAN

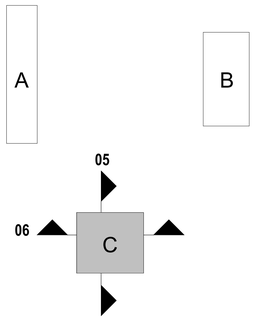

LPA
ARCHITECTURE ENGINEERING INTERIORS
LANDSCAPE ARCHITECTURE PLANNING

916-287-2400 Office

916-287-2401 Fax

LPADesignStudios.com

431 I Street,
Suite 107
Sacramento, California 95814

LICENSED ARCHITECT
ARVING W KIN
No. C-33172
REN: 05-31-23
STATE OF CALIFORNIA

This document and all other project documents, ideas, aesthetics and designs incorporated therein are instruments of service. All project documents are copyright protected, are the property of LPA, Inc. (LPA) and cannot be lawfully used in whole or in part for any project or purpose except as set forth in the contractual agreement between LPA and its Client. The unauthorized disclosure and/or use of the project documents (including the creation of derivative works), may give rise to liability for copyright infringement, unlawful disclosure, use or misappropriation of property rights held by LPA. The unauthorized use of the project documents will give rise to the recovery of monetary losses and damages including attorney fees and costs for which the unauthorized user will be held liable.
Project documents describe the design intent of the work and are not a representation of as-built or existing conditions. LPA is not responsible for any discrepancies between the project documents and the existing conditions.

© LPA, Inc.

DAVIS SR HIGH SCHOOL
AQUATICS CENTER
315 W 14TH ST., DAVIS, CA 95616

Developed for
DAVIS JOINT UNIFIED SCHOOL DISTRICT

Revision	Date

Submittal	Date
50% DD REVIEW	06/15/2021
100% DD SUBMITTAL	07/26/2021
50% CD REVIEW	10/08/2021
100% CD DSA SUBMITTAL	10/22/2021
DSA SUBMITTAL	03/24/2022

Job Number	1904413
Date Published	03/24/2022
Checked By	Checker
Scale	1/8" = 1'-0"

BUILDING SECTIONS - POOL RESTROOM BUILDING

A3.12

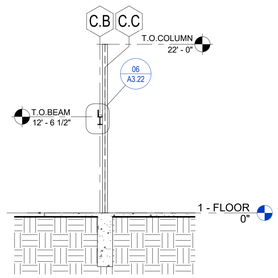

BUILDING SECTION - EW 1/8" = 1'-0" 10

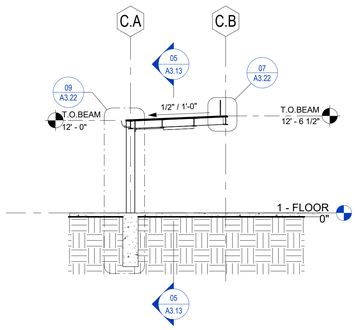

BUILDING SECTION - EW 1/8" = 1'-0" 06

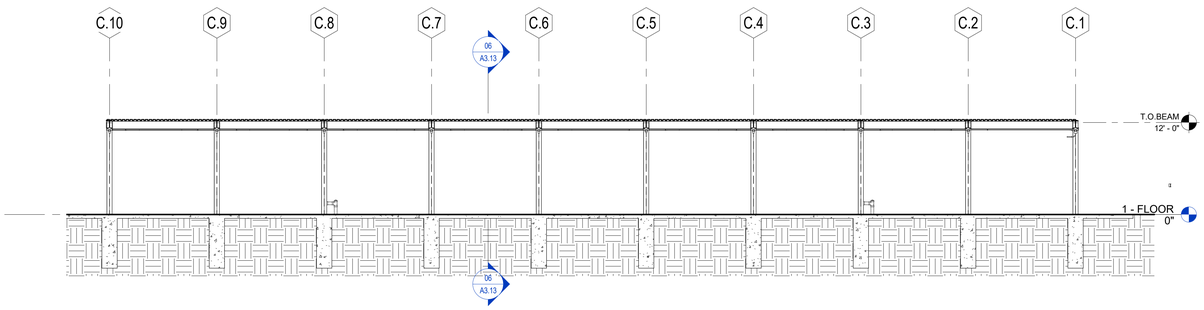

BUILDING SECTION - NS 1/8" = 1'-0" 05

KEYNOTES

IDENTIFICATION STAMP
DIV. OF THE STATE ARCHITECT
APP: 02-119490 INC:
REVIEWED FOR
SS ☑ FLS ☑ ACS ☑
DATE: 09/13/2022

LEGEND

GENERAL NOTES

1. FOR CMU WALL ASSEMBLY SEE, 03/ A8.01
2. CONTRACTOR SHALL REVIEW COMPLETE SET OF CONSTRUCTION DOCUMENTS AND COORDINATE SOW WITHIN ALL DISCIPLINES

KEY PLAN

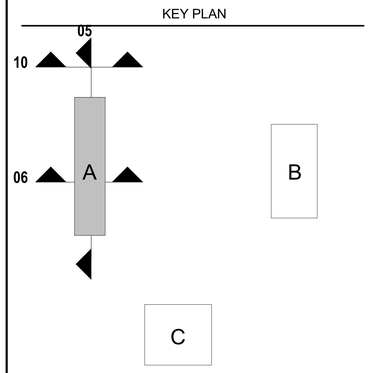

LPA

ARCHITECTURE ENGINEERING INTERIORS
LANDSCAPE ARCHITECTURE PLANNING

916-287-2400 Office

916-287-2401 Fax

LPADesignStudios.com

431 I Street,
Suite 107
Sacramento, California 95814

LICENSED ARCHITECT
JIUNG W MAK
C-33172
REN 05-31-23
STATE OF CALIFORNIA

This document and all other project documents, ideas, aesthetics and designs incorporated therein are instruments of service. All project documents are copyright protected, are the property of LPA, Inc. (LPA) and cannot be lawfully used in whole or in part for any project or purpose except as set forth in the contractual agreement between LPA and its Client. The unauthorized disclosure and/or use of the project documents (including the creation of derivative works), may give rise to liability for copyright infringement, unlawful disclosure, use or misappropriation of property rights held by LPA. The unauthorized use of the project documents will give rise to the recovery of monetary losses and damages including attorney fees and costs for which the unauthorized user will be held liable.
Project documents describe the design intent of the work and are not a representation of as-built or existing conditions. LPA is not responsible for any discrepancies between the project documents and the existing conditions.

© LPA, Inc.

DAVIS SR HIGH SCHOOL
AQUATICS CENTER
315 W 14TH ST., DAVIS, CA 95616

Developed for
DAVIS JOINT UNIFIED SCHOOL DISTRICT

Revision	Date

Submittal	Date
50% DD REVIEW	06/15/2021
100% DD SUBMITTAL	07/26/2021
50% CD REVIEW	10/08/2021
100% CD DSA SUBMITTAL	10/22/2021
DSA SUBMITTAL	03/24/2022

Job Number	1904413
Date Published	03/24/2022
Checked By	Checker
Scale	1/8" = 1'-0"

BUILDING SECTIONS - METAL SHADE STRUCTURE

A3.13

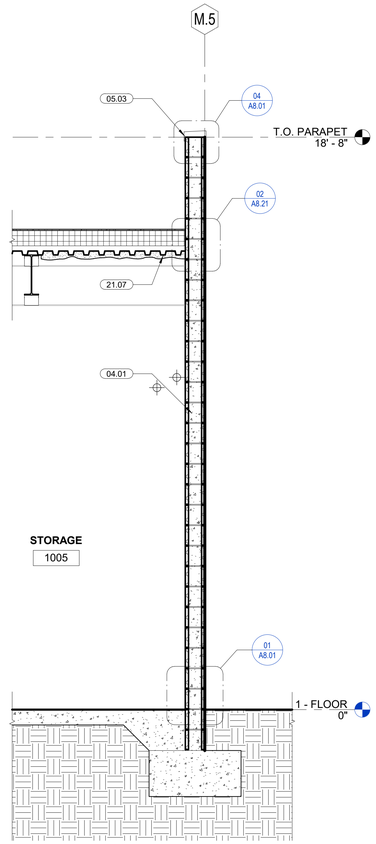

WALL SECTION 1/2" = 1'-0" 11

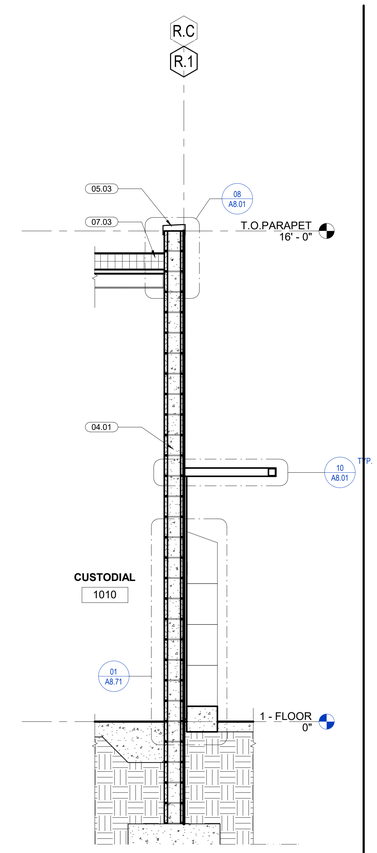

WALL SECTION 1/2" = 1'-0" 07

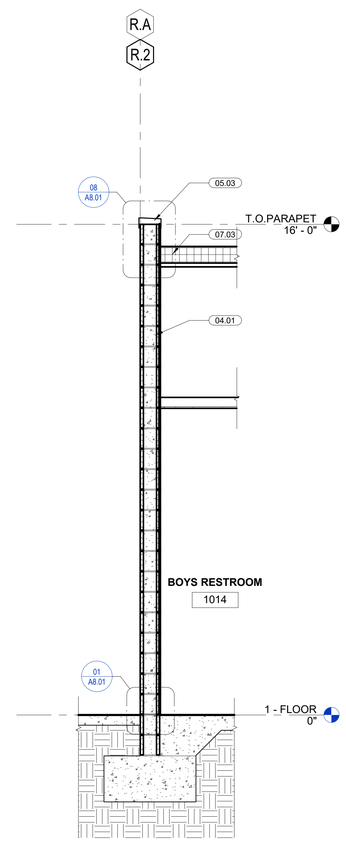

WALL SECTION 1/2" = 1'-0" 21

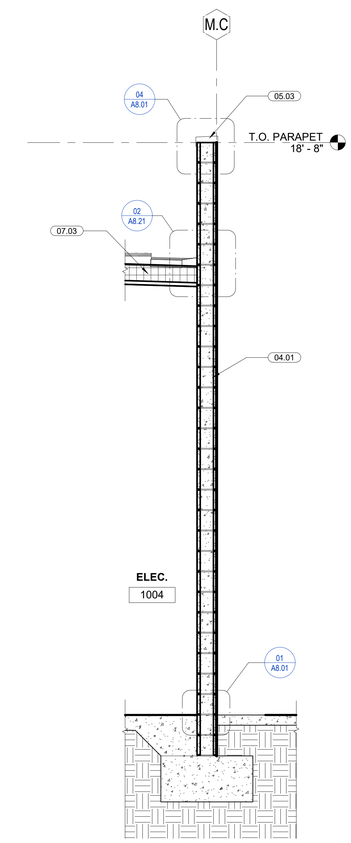

WALL SECTION 1/2" = 1'-0" 17

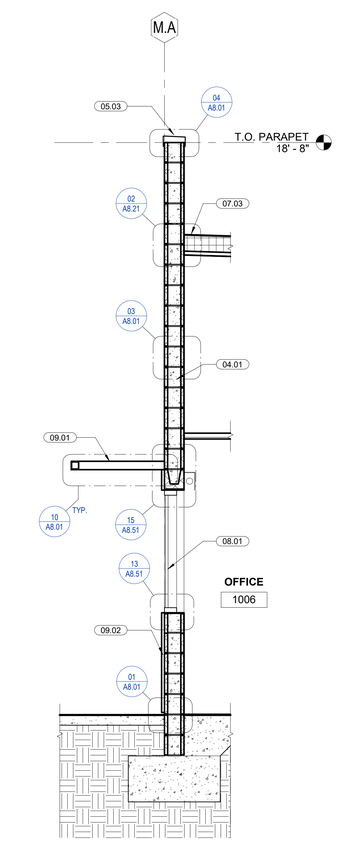

WALL SECTION 1/2" = 1'-0" 13

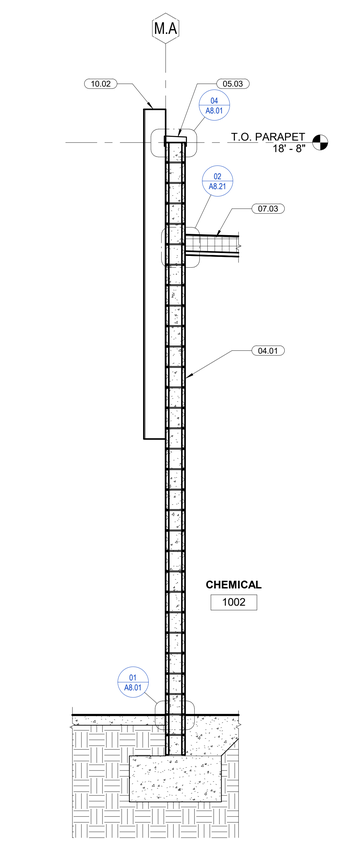

WALL SECTION 1/2" = 1'-0" 09

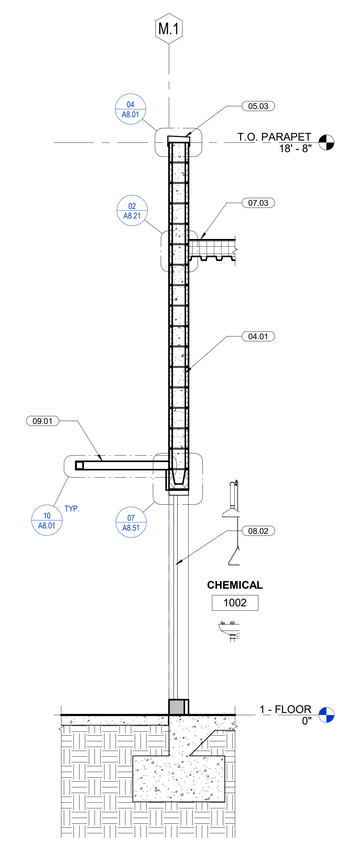

WALL SECTION 1/2" = 1'-0" 05

KEYNOTES

04.01	CMU WALL ASSEMBLY
05.03	G.S.M. COPING CAP, PAINTED
07.03	SINGLE PLY ROOF, SEE ROOF PLAN
08.01	STOREFRONT SYSTEM, SEE WINDOW SCHEDULE
08.02	EXTERIOR H.M. DOOR, SEE DOOR SCHEDULE
09.01	GALVANIZED STEEL PANEL VISOR, PAINTED
09.02	GALVANIZED STEEL WALL PANEL, PAINTED
10.02	DIGITAL SCOREBOARD. REFER TO STRUCTURAL AND POOL DRAWINGS, REF: 1/AQ1.11 FOR ATTACHMENT TO STRUCTURE
21.07	1-HR RATED SPRAYED FIREPROOF PROTECTION TO UNDERSIDE OF DECK, BEAM AND CONNECTION PLATES

LEGEND

IDENTIFICATION STAMP
DIV. OF THE STATE ARCHITECT
APP: 02-119490 INC:
REVIEWED FOR
SS ☑ FLS ☑ ACS ☑
DATE: 09/13/2022

LPA

ARCHITECTURE ENGINEERING INTERIORS
LANDSCAPE ARCHITECTURE PLANNING

916-287-2400 Office

916-287-2401 Fax

LPADesignStudios.com

431 I Street,
Suite 107
Sacramento, California 95814

LICENSED ARCHITECT
CHONG W. KIM
C-33172
REN 05-31-23
STATE OF CALIFORNIA

This document and all other project documents, ideas, aesthetics and designs incorporated therein are instruments of service. All project documents are copyright protected, are the property of LPA, Inc. (LPA) and cannot be lawfully used in whole or in part for any project or purpose except as set forth in the contractual agreement between LPA and its Client. The unauthorized disclosure and/or use of the project documents (including the creation of derivative works), may give rise to liability for copyright infringement, unlawful disclosure, use or misappropriation of property rights held by LPA. The unauthorized use of the project documents will give rise to the recovery of monetary losses and damages including attorney fees and costs for which the unauthorized user will be held liable.
Project documents describe the design intent of the work and are not a representation of as-built or existing conditions. LPA is not responsible for any discrepancies between the project documents and the existing conditions.

© LPA, Inc.

DAVIS SR HIGH SCHOOL
AQUATICS CENTER
315 W 14TH ST., DAVIS, CA 95616

Developed for
DAVIS JOINT UNIFIED SCHOOL DISTRICT

Revision	Date

Submittal	Date
50% DD REVIEW	06/15/2021
100% DD SUBMITTAL	07/26/2021
50% CD REVIEW	10/08/2021
100% CD DSA SUBMITTAL	10/22/2021
DSA SUBMITTAL	03/24/2022

Job Number	1904413
Date Published	03/24/2022
Checked By	Checker
Scale	As indicated

WALL SECTIONS

A3.21

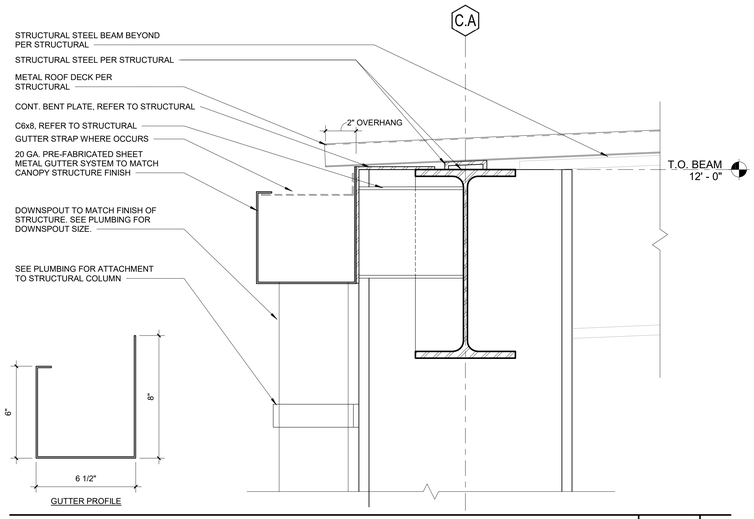

METAL SHADE STRUCTURE GUTTER | 3" = 1'-0" | 11

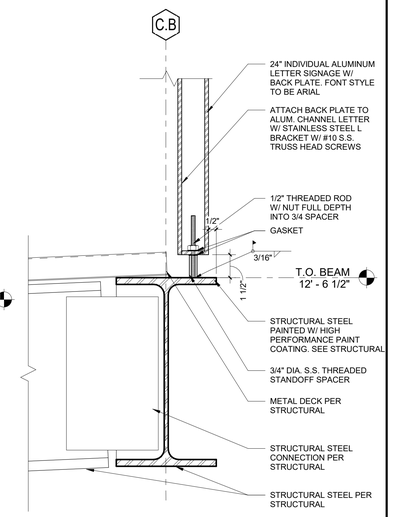

ROOF EDGE | 3" = 1'-0" | 07

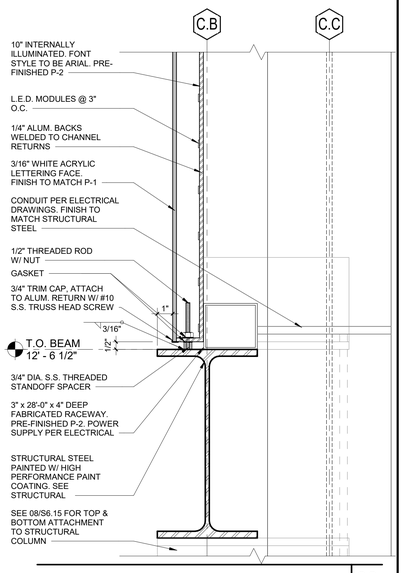

CANOPY ROOF EDGE - ENTRANCE | 06

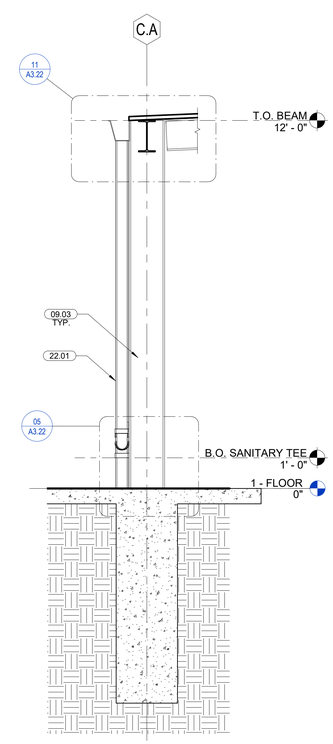

METAL SHADE STRUCTURE SECTION | 1/2" = 1'-0" | 09

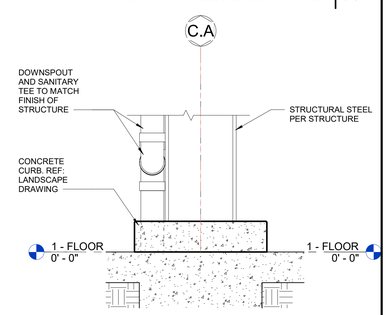

COLUMN BASE | 1" = 1'-0" | 05

KEYNOTES

09.03	FULLY PAINTED WITH 1-HR INTUMESCENT PAINT
22.01	4" STEEL TUBE DOWNSPOUT. PAINT TO MATCH STEEL COLUMN

LEGEND

IDENTIFICATION STAMP
DIV. OF THE STATE ARCHITECT
APP: 02-119490 INC:
REVIEWED FOR
SS ☑ FLS ☑ ACS ☑
DATE: 09/13/2022

LPA
ARCHITECTURE ENGINEERING INTERIORS
LANDSCAPE ARCHITECTURE PLANNING

916-287-2400 Office
916-287-2401 Fax
LPADesignStudios.com
431 I Street,
Suite 107
Sacramento, California 95814

LICENSED ARCHITECT
LANING W. M.N.
No. C-31172
REN 05-31-23
STATE OF CALIFORNIA

This document and all other project documents, ideas, aesthetics and designs incorporated therein are instruments of service. All project documents are copyright protected, are the property of LPA, Inc. (LPA) and cannot be lawfully used in whole or in part for any project or purpose except as set forth in the contractual agreement between LPA and its Client. The unauthorized disclosure and/or use of the project documents (including the creation of derivative works), may give rise to liability for copyright infringement, unlawful disclosure, use or misappropriation of property rights held by LPA. The unauthorized use of the project documents will give rise to the recovery of monetary losses and damages including attorney fees and costs for which the unauthorized user will be held liable.
Project documents describe the design intent of the work and are not a representation of as-built or existing conditions. LPA is not responsible for any discrepancies between the project documents and the existing conditions.

© LPA, Inc.

DAVIS SR HIGH SCHOOL
AQUATICS CENTER
315 W 14TH ST., DAVIS, CA 95616

Developed for
DAVIS JOINT UNIFIED SCHOOL DISTRICT

Revision	Date

Submittal	Date
50% DD REVIEW	06/15/2021
100% DD SUBMITTAL	07/26/2021
90% CD REVIEW	10/08/2021
100% CD DSA SUBMITTAL	10/22/2021
DSA SUBMITTAL	03/24/2022

Job Number	1904413
Date Published	03/24/2022
Checked By	Checker
Scale	As indicated

METAL SHADE STRUCTURE SECTIONS & DETAILS

A3.22

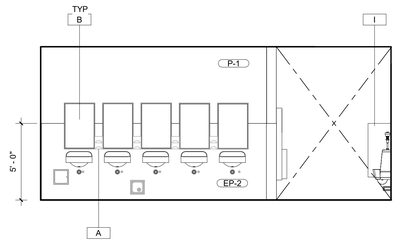

BOYS RR 1014 - WEST | 20

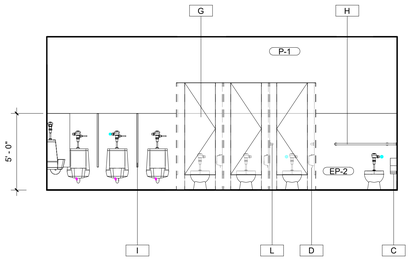

BOYS RR 1014 - EAST | 16

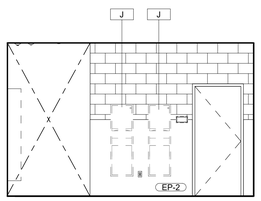

BOYS RR 1014 | 23

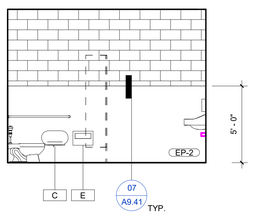

BOYS RR 1014 - SOUTH | 19

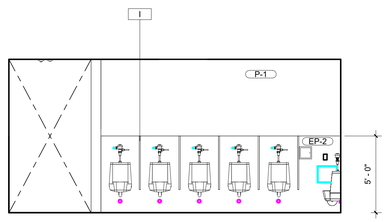

BOYS RR 1014 - NORTH | 15

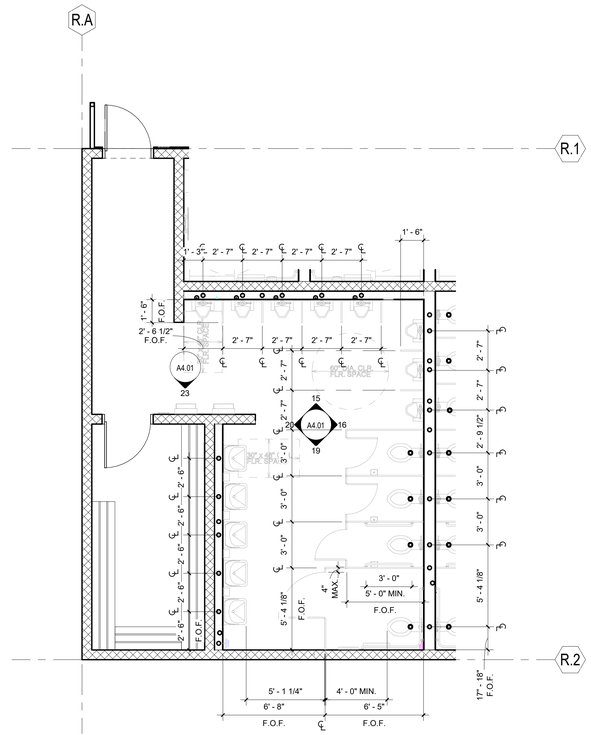

1014 - BOYS FLOOR PLAN | 1/4" = 1'-0" | 07

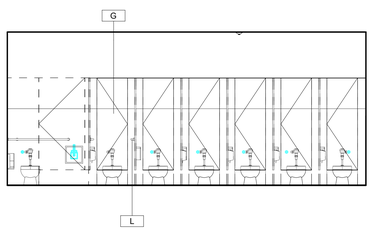

GIRLS RR 1013 -WEST | 18

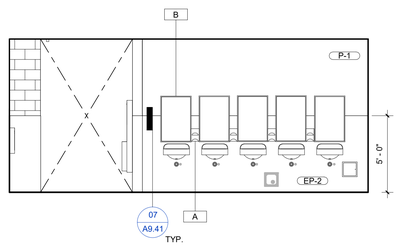

GIRLS RR 1013 -EAST | 14

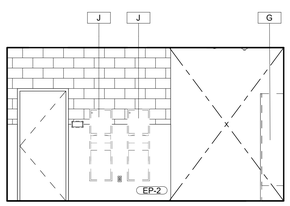

GIRLS RR 1013 | 21

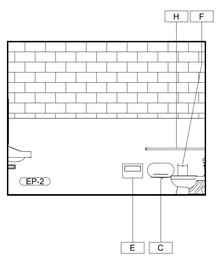

GIRLS RR 1013 - SOUTH | 17

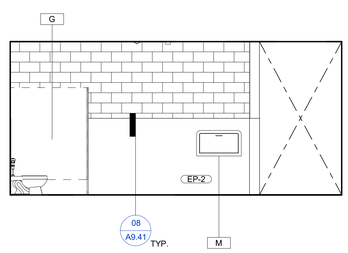

GIRLS RR 1013 - NORTH | 13

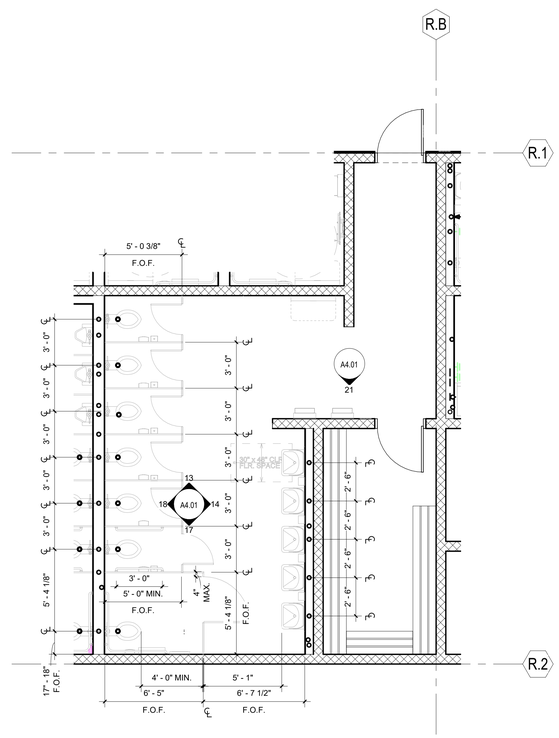

1013 - GIRLS RR FLOOR PLAN | 1/4" = 1'-0" | 05

KEYNOTES

IDENTIFICATION STAMP
DIV. OF THE STATE ARCHITECT
APP: 02-119490 INC:
REVIEWED FOR
SS ☑ FLS ☑ ACS ☑
DATE: 09/13/2022

LEGEND

ALIGN FINISHES

XX FINISH TAG, REFER TO FINISH PLANS.

1i RESTROOM ACCESSORY TAG, SEE SCHEDULE BELOW

RESTROOM ACCESSORIES

Type Mark	MANUFACTURER	MODEL #	DESCRIPTION
A			SURFACE MOUNTED SOAP DISPENSER OFOI
B	BOBRICK	B-290 2436	WELDED FRAME MIRROR
B1	BOBRICK	B-290 2448	WELDED FRAME MIRROR
C			SURFACE MOUNTED TWIN JUMMO-ROLL TOILET TISSUE DISPENSER, OFOI
D			SURFACE MOUNTED TOILET TISSUE DISPENSER, OFOI
E			CLASSIC SERIES SURFACE MOUNTED SEAT COVER DISPENSER, OFOI
F			CLASSIC SERIES SURFACE MOUNTED SANITARY NAPKIN DISPOSAL,OFOI
G	ACCURATE PARTITIONS	COLOR THRU PHENOLIC	FLOOR ANCHORED/OVERHEAD BRACED, COLOR FOG 3450C
H	BOBRICK	B-5806 SERIES - MODEL B-5897	TWO WALL TOILET COMPARTMENT STAINLESS STEEL GRAB BARS
I	ACCURATE PARTITIONS	COLOR THRU PHENOLIC	URINAL SCREEN, COLOR FOG 3450C
J			CLASSIC SERIES SURFACE MOUNTED CONVERTIBLE COMBINATION TOWEL AND WASTE UNIT, OFOI
K	BOBRICK	B-5193	SOLID PHENOLIC FOLDING SHOWER AREA SEAT, SEE DETAIL 20/A9.41
L	BOBRICK	B-5806 SERIES	36" GRAB BAR
M	KOALA KARE	KB110-SSWM	STAINLESS STEEL WALL MOUNTED BABY CHANGING STATION

GENERAL NOTES

1. FOR INTERIOR FINISHES SEE FINISH FLOOR PLANS & FINISH LEGEND.
2. ALL DIMENSIONS OF WALLS ARE FROM FACE OF STUD U.N.O. FOR WALL TYPE, SEE FLOOR PLAN.
3. ALL DIMENSIONS OF FIXTURES ARE FROM FACE OF FINISH TO CENTER OF FIXTURE U.N.O.
4. ALL PLUMBING FIXTURES TO HAVE SOLID BLOCKING AS REQUIRED BY CODE.
5. FOR TOILET FIXTURES AND MOUNTING HEIGHTS, RE:05/G0.81
6. CONTRACTOR COORDINATE WITH TOILET ACCESSORIES SCHEDULE TO PROVIDE RECESSED/ SEMI-RECESSED CONDITIONS (WHERE OCCURS) AND COORDINATE MOUNTING LOCATION FOR BACKING PLATES. FOR BACKING DETAIL, RE:
7. FLOOR DRAIN DETAILS, RE: 01/A9.71
8. REFER TO MANUFACTURER'S TOILET ACCESSORY INSTALLATION AND OTHER MOUNTING INSTRUCTIONS AND PROVIDE WALL BACKING AND OTHER REQUIRED SUPPORT AS INDICATED THEREIN.
9. ALL ACCESSIBLE STALLS: TOILET PARTITION DOOR WIDTHS TO BE 36" (34" MIN. CLEAR) PARTITION STILE WIDTH SHALL NOT EXCEED 4". FLUSH VALVE TO BE LOCATED AT WIDE SIDE OF SPACE.
10. FOR SIGNAGE DETAILS AND MOUNTING HEIGHTS, RE: 13/A10.11
11. FOR TOILET PARTITION DETAILS, RE: 06/A9.41

LPA
ARCHITECTURE ENGINEERING INTERIORS
LANDSCAPE ARCHITECTURE PLANNING

916-287-2400 Office
916-287-2401 Fax
LPADesignStudios.com
431 I Street,
Suite 107
Sacramento, California 95814

LICENSED ARCHITECT
JAMES W. MAY
Lic. C-33172
Exp. 05-31-23
STATE OF CALIFORNIA

This document and all other project documents, ideas, aesthetics and designs incorporated therein are instruments of service. All project documents are copyright protected, are the property of LPA, Inc. (LPA) and cannot be lawfully used in whole or in part for any project or purpose except as set forth in the contractual agreement between LPA and its Client. The unauthorized disclosure and/or use of the project documents (including the creation of derivative works), may give rise to liability for copyright infringement, unlawful disclosure, use or misappropriation of property rights held by LPA. The unauthorized use of the project documents will give rise to the recovery of monetary losses and damages including attorney fees and costs for which the unauthorized user will be held liable.
Project documents describe the design intent of the work and are not a representation of as-built or existing conditions. LPA is not responsible for any discrepancies between the project documents and the existing conditions.

© LPA, Inc.

DAVIS SR HIGH SCHOOL
AQUATICS CENTER
315 W 14TH ST., DAVIS, CA 95616

Developed for
DAVIS JOINT UNIFIED SCHOOL DISTRICT

Revision	Date

Submittal	Date
50% DD REVIEW	06/15/2021
100% DD SUBMITTAL	07/26/2021
50% CD REVIEW	10/08/2021
100% CD DSA SUBMITTAL	10/22/2021
DSA SUBMITTAL	03/24/2022

Job Number	1904413
Date Published	03/24/2022
Checked By	Checker
Scale	

ENLARGED FLOOR PLANS

A4.01

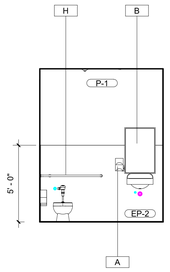

FAMILY ROOM 1017- WEST | 24

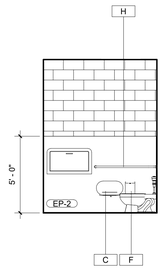

FAMILY ROOM 1017 - SOUTH | 20

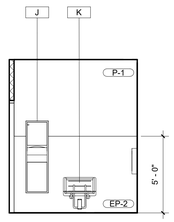

FAMILY ROOM 1017 - EAST | 16

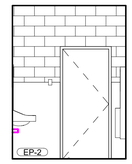

FAMILY ROOM 1017 - NORTH | 12

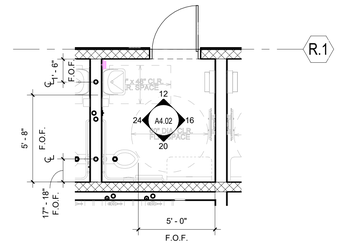

1017 - FAMILY RM FLOOR PLAN | 08

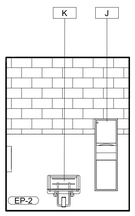

FAMILY ROOM 1016 WEST | 23

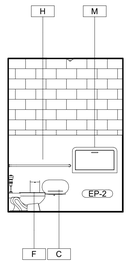

FAMILY FROOM 1016 SOUTH | 19

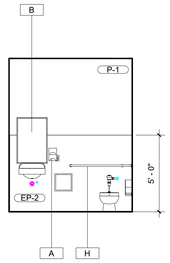

FAMILY ROOM 1016 EAST | 15

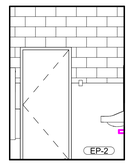

FAMILY ROOM 1016 - NORTH | 11

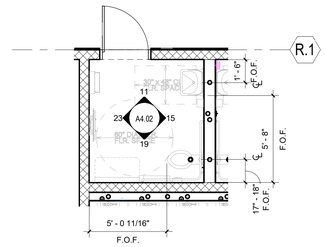

1016 - FAMILY RM FLOOR PLAN | 07

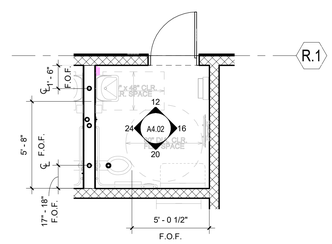

1008 - FAMILY RM FLOOR PLAN | 06

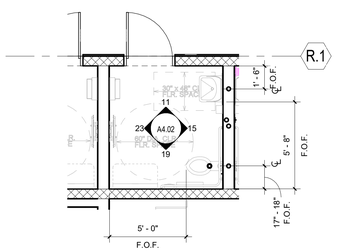

1007 - FAMILY RM FLOOR PLAN | 05

KEYNOTES

LEGEND

ALIGN FINISHES

XX FINISH TAG, REFER TO FINISH PLANS.

1i RESTROOM ACCESSORY TAG, SEE SCHEDULE BELOW

RESTROOM ACCESSORIES

Type Mark	MANUFACTURER	MODEL #	DESCRIPTION
A			SURFACE MOUNTED SOAP DISPENSER OFOI
B	BOBRICK	B-290 2436	WELDED FRAME MIRROR
B1	BOBRICK	B-290 2448	WELDED FRAME MIRROR
C			SURFACE MOUNTED TWIN JUMMO-ROLL TOILET TISSUE DISPENSER, OFOI
D			SURFACE MOUNTED TOILET TISSUE DISPENSER, OFOI
E			CLASSIC SERIES SURFACE MOUNTED SEAT COVER DISPENSER, OFOI
F			CLASSIC SERIES SURFACE MOUNTED SANITARY NAPKIN DISPOSAL,OFOI
G	ACCURATE PARTITIONS	COLOR THRU PHENOLIC	FLOOR ANCHORED/OVERHEAD BRACED, COLOR FOG 3450C
H	BOBRICK	B-5806 SERIES - MODEL B-5897	TWO WALL TOILET COMPARTMENT STAINLESS STEEL GRAB BARS
I	ACCURATE PARTITIONS	COLOR THRU PHENOLIC	URINAL SCREEN, COLOR FOG 3450C
J			CLASSIC SERIES SURFACE MOUNTED CONVERTIBLE COMBINATION TOWEL AND WASTE UNIT, OFOI
K	BOBRICK	B-5193	SOLID PHENOLIC FOLDING SHOWER AREA SEAT, SEE DETAIL 20/A9.41
L	BOBRICK	B-5806 SERIES	36" GRAB BAR
M	KOALA KARE	KB110-SSWM	STAINLESS STEEL WALL MOUNTED BABY CHANGING STATION

GENERAL NOTES

1. FOR INTERIOR FINISHES SEE FINISH FLOOR PLANS & FINISH LEGEND.
2. ALL DIMENSIONS OF WALLS ARE FROM FACE OF STUD U.N.O. FOR WALL TYPE, SEE FLOOR PLAN.
3. ALL DIMENSIONS OF FIXTURES ARE FROM FACE OF FINISH TO CENTER OF FIXTURE U.N.O.
4. ALL PLUMBING FIXTURES TO HAVE SOLID BLOCKING AS REQUIRED BY CODE.
5. FOR TOILET FIXTURES AND MOUNTING HEIGHTS, RE:05/G0.81
6. CONTRACTOR COORDINATE WITH TOILET ACCESSORIES SCHEDULE TO PROVIDE RECESSED/ SEMI-RECESSED CONDITIONS (WHERE OCCURS) AND COORDINATE MOUNTING LOCATION FOR BACKING PLATES. FOR BACKING DETAIL, RE:
7. FLOOR DRAIN DETAILS, RE: 01/A9.71
8. REFER TO MANUFACTURER'S TOILET ACCESSORY INSTALLATION AND OTHER MOUNTING INSTRUCTIONS AND PROVIDE WALL BACKING AND OTHER REQUIRED SUPPORT AS INDICATED THEREIN.
9. ALL ACCESSIBLE STALLS: TOILET PARTITION DOOR WIDTHS TO BE 36" (34" MIN. CLEAR) PARTITION STILE WIDTH SHALL NOT EXCEED 4". FLUSH VALVE TO BE LOCATED AT WIDE SIDE OF SPACE.
10. FOR SIGNAGE DETAILS AND MOUNTING HEIGHTS, RE: 13/A10.11
11. FOR TOILET PARTITION DETAILS, RE: 06/A9.41

IDENTIFICATION STAMP
DIV. OF THE STATE ARCHITECT
APP: 02-119490 INC:
REVIEWED FOR
SS ☑ FLS ☑ ACS ☑
DATE: 09/13/2022

LPA
ARCHITECTURE ENGINEERING INTERIORS
LANDSCAPE ARCHITECTURE PLANNING

916-287-2400 Office
916-287-2401 Fax
LPADesignStudios.com
431 I Street,
Suite 107
Sacramento, California 95814

LICENSED ARCHITECT
YOUNG W MAR
C-33172
REN 05-31-23
STATE OF CALIFORNIA

This document and all other project documents, ideas, aesthetics and designs incorporated therein are instruments of service. All project documents are copyright protected, are the property of LPA, Inc. (LPA) and cannot be lawfully used in whole or in part for any project or purpose except as set forth in the contractual agreement between LPA and its Client. The unauthorized disclosure and/or use of the project documents (including the creation of derivative works), may give rise to liability for copyright infringement, unlawful disclosure, use or misappropriation of property rights held by LPA. The unauthorized use of the project documents will give rise to the recovery of monetary losses and damages including attorney fees and costs for which the unauthorized user will be held liable.
Project documents describe the design intent of the work and are not a representation of as-built or existing conditions. LPA is not responsible for any discrepancies between the project documents and the existing conditions.

© LPA, Inc.

DAVIS SR HIGH SCHOOL
AQUATICS CENTER
315 W 14TH ST., DAVIS, CA 95616

Developed for
DAVIS JOINT UNIFIED SCHOOL DISTRICT

Revision	Date

Submittal	Date
50% DD REVIEW	06/15/2021
100% DD SUBMITTAL	07/26/2021
50% CD REVIEW	10/08/2021
100% CD DSA SUBMITTAL	10/22/2021
DSA SUBMITTAL	03/24/2022

Job Number	1904413
Date Published	03/24/2022
Checked By	Checker
Scale	

ENLARGED FLOOR PLANS

A4.02

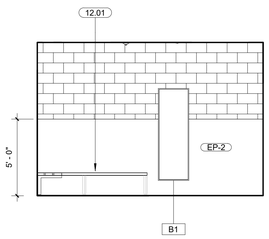

CHANGING ROOM 1015 WEST | 23

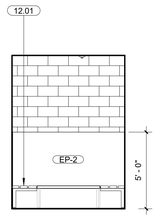

CHANGING ROOM 1015 SOUTH | 19

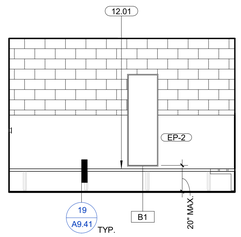

CHANGING ROOM 1015 EAST | 15

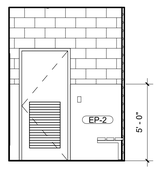

CHANGING ROOM 1015 NORTH | 11

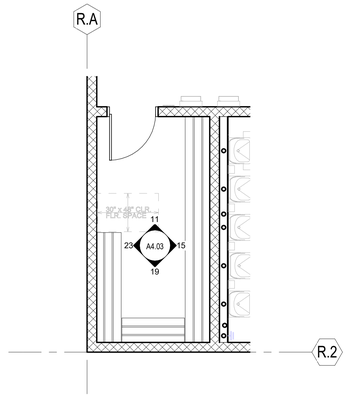

1015 - CHANGING RM FLOOR PLAN | 07

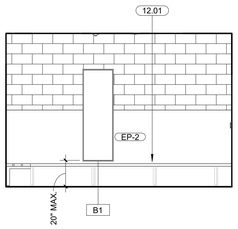

CHANGING ROOM 1012 WEST | 22

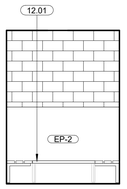

CHANGING ROOM 1012 SOUTH | 18

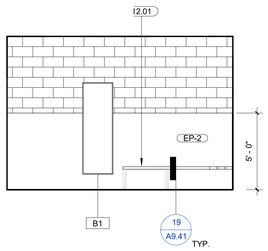

CHANGING ROOM 1012 EAST | 14

CHANGING ROOM 1012 NORTH | 10

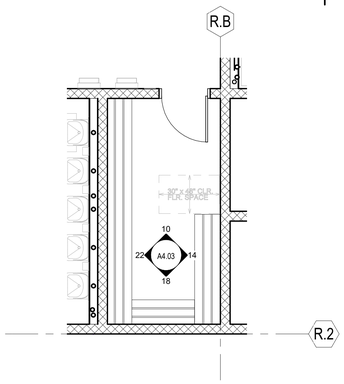

1012 - CHANGING RM FLOOR PLAN | 06

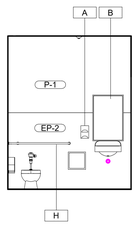

FAMILY ROOM 1009 WEST | 21

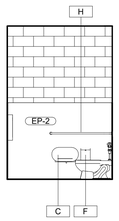

FAMILY ROOM 1009 SOUTH | 17

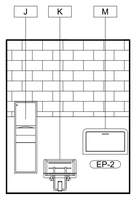

FAMILY ROOM 1009 EAST | 13

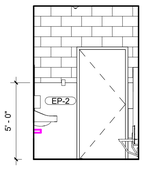

FAMILY ROOM 1009 NORTH | 09

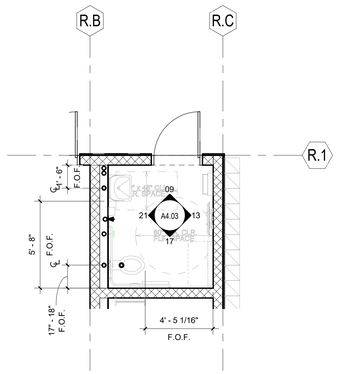

1009 - FAMILY RM FLOOR PLAN | 05

KEYNOTES

12.01	WALL MOUNTED WOOD BENCH

IDENTIFICATION STAMP
DIV. OF THE STATE ARCHITECT
APP: 02-119490 INC:
REVIEWED FOR
SS ☑ FLS ☑ ACS ☑
DATE: 09/13/2022

LEGEND

ALIGN FINISHES

XX FINISH TAG, REFER TO FINISH PLANS.

1i RESTROOM ACCESSORY TAG, SEE SCHEDULE BELOW

RESTROOM ACCESSORIES

Type Mark	MANUFACTURER	MODEL #	DESCRIPTION
A			SURFACE MOUNTED SOAP DISPENSER OFOI
B	BOBRICK	B-290 2436	WELDED FRAME MIRROR
B1	BOBRICK	B-290 2472	WELDED FRAME MIRROR
C			SURFACE MOUNTED TWIN JUMMO-ROLL TOILET TISSUE DISPENSER, OFOI
D			SURFACE MOUNTED TOILET TISSUE DISPENSER, OFOI
E			CLASSIC SERIES SURFACE MOUNTED SEAT COVER DISPENSER, OFOI
F			CLASSIC SERIES SURFACE MOUNTED SANITARY NAPKIN DISPOSAL,OFOI
G	ACCURATE PARTITIONS	COLOR THRU PHENOLIC	FLOOR ANCHORED/OVERHEAD BRACED, COLOR FOG 3450C
H	BOBRICK	B-5806 SERIES - MODEL B-5897	TWO WALL TOILET COMPARTMENT STAINLESS STEEL GRAB BARS
I	ACCURATE PARTITIONS	COLOR THRU PHENOLIC	URINAL SCREEN, COLOR FOG 3450C
J			CLASSIC SERIES SURFACE MOUNTED CONVERTIBLE COMBINATION TOWEL AND WASTE UNIT, OFOI
K	BOBRICK	B-5193	SOLID PHENOLIC FOLDING SHOWER AREA SEAT, SEE DETAIL 20/A9.41
L	BOBRICK	B-5806 SERIES	36" GRAB BAR
M	KOALA KARE	KB110-SSWM	STAINLESS STEEL WALL MOUNTED BABY CHANGING STATION

GENERAL NOTES

1. FOR INTERIOR FINISHES SEE FINISH FLOOR PLANS & FINISH LEGEND.
2. ALL DIMENSIONS OF WALLS ARE FROM FACE OF STUD U.N.O. FOR WALL TYPE, SEE FLOOR PLAN.
3. ALL DIMENSIONS OF FIXTURES ARE FROM FACE OF FINISH TO CENTER OF FIXTURE U.N.O.
4. ALL PLUMBING FIXTURES TO HAVE SOLID BLOCKING AS REQUIRED BY CODE.
5. FOR TOILET FIXTURES AND MOUNTING HEIGHTS, RE:05/G0.81
6. CONTRACTOR COORDINATE WITH TOILET ACCESSORIES SCHEDULE TO PROVIDE RECESSED/ SEMI-RECESSED CONDITIONS (WHERE OCCURS) AND COORDINATE MOUNTING LOCATION FOR BACKING PLATES. FOR BACKING DETAIL, RE:
7. FLOOR DRAIN DETAILS, RE: 01/A9.71
8. REFER TO MANUFACTURER'S TOILET ACCESSORY INSTALLATION AND OTHER MOUNTING INSTRUCTIONS AND PROVIDE WALL BACKING AND OTHER REQUIRED SUPPORT AS INDICATED THEREIN.
9. ALL ACCESSIBLE STALLS: TOILET PARTITION DOOR WIDTHS TO BE 36" (34" MIN. CLEAR) PARTITION STILE WIDTH SHALL NOT EXCEED 4". FLUSH VALVE TO BE LOCATED AT WIDE SIDE OF SPACE.
10. FOR SIGNAGE DETAILS AND MOUNTING HEIGHTS, RE: 13/A10.11
11. FOR TOILET PARTITION DETAILS, RE: 06/A9.41

LPA
ARCHITECTURE ENGINEERING INTERIORS
LANDSCAPE ARCHITECTURE PLANNING

916-287-2400 Office
916-287-2401 Fax
LPADesignStudios.com
431 I Street,
Suite 107
Sacramento, California 95814

LICENSED ARCHITECT
DONG W. MA
C-33172
REN 06-31-22
STATE OF CALIFORNIA

This document and all other project documents, ideas, aesthetics and designs incorporated therein are instruments of service. All project documents are copyright protected, are the property of LPA, Inc. (LPA) and cannot be lawfully used in whole or in part for any project or purpose except as set forth in the contractual agreement between LPA and its Client. The unauthorized disclosure and/or use of the project documents (including the creation of derivative works), may give rise to liability for copyright infringement, unlawful disclosure, use or misappropriation of property rights held by LPA. The unauthorized use of the project documents will give rise to the recovery of monetary losses and damages including attorney fees and costs for which the unauthorized user will be held liable.
Project documents describe the design intent of the work and are not a representation of as-built or existing conditions. LPA is not responsible for any discrepancies between the project documents and the existing conditions.

© LPA, Inc.

DAVIS SR HIGH SCHOOL AQUATICS CENTER
315 W 14TH ST., DAVIS, CA 95616

Developed for
DAVIS JOINT UNIFIED SCHOOL DISTRICT

Revision	Date

Submittal	Date
50% DD REVIEW	06/15/2021
100% DD SUBMITTAL	07/26/2021
50% CD REVIEW	10/08/2021
100% CD DSA SUBMITTAL	10/22/2021
DSA SUBMITTAL	03/24/2022

Job Number	1904413
Date Published	03/24/2022
Checked By	Checker
Scale	

ENLARGED FLOOR PLANS

A4.03

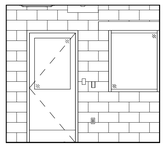

OFFICE 1006 - WEST | 1/4" = 1'-0" | 24

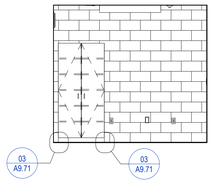

OFFICE 1006 - SOUTH | 1/4" = 1'-0" | 20

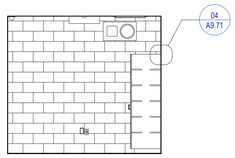

OFFICE 1006 - EAST | 1/4" = 1'-0" | 16

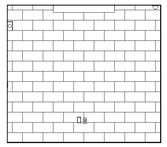

OFFICE 1006 - NORTH | 1/4" = 1'-0" | 12

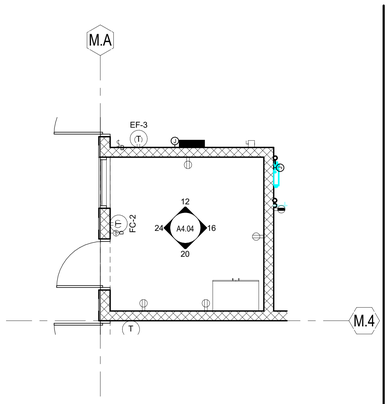

1006 - OFFICE FLOOR PLAN | 1/4" = 1'-0" | 08

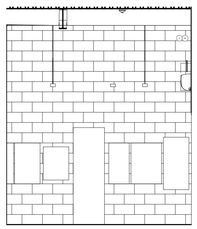

ELECTRICAL ROOM 1004 - WEST | 1/4" = 1'-0" | 23

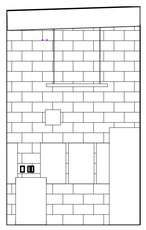

ELECTRICAL ROOM 1004 - SOUTH | 1/4" = 1'-0" | 19

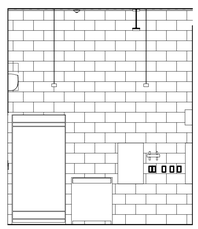

ELECTRICAL ROOM 1004 - EAST | 1/4" = 1'-0" | 15

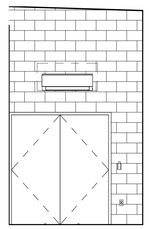

ELECTRICAL ROOM 1004 - NORTH | 1/4" = 1'-0" | 11

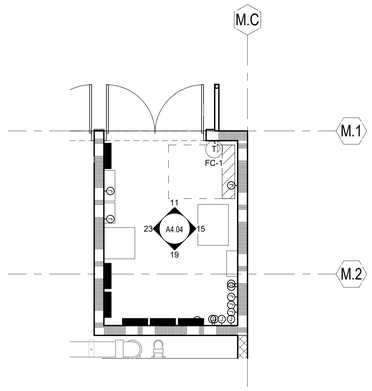

1004 - ELECTRICAL ROOM FLOOR PLAN | 1/4" = 1'-0" | 07

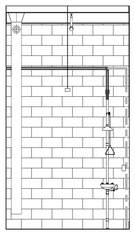

CHEMICAL 1003 - WEST | 1/4" = 1'-0" | 22

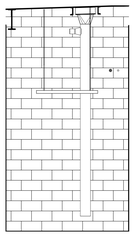

CHEMICAL ROOM 1003 - SOUTH | 1/4" = 1'-0" | 18

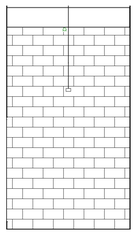

CHEMICAL ROOM 1003 - EAST | 1/4" = 1'-0" | 14

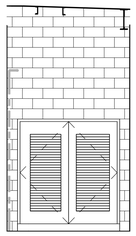

CHEMICAL ROOM 1003 - NORTH | 1/4" = 1'-0" | 10

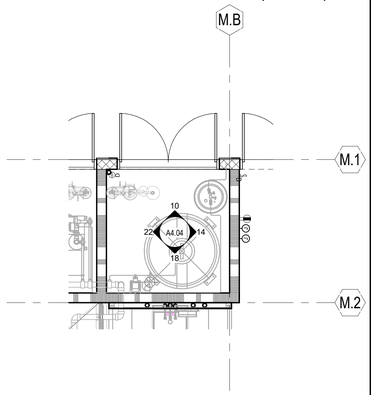

1003 - CHEMICAL ROOM FLOOR PLAN | 1/4" = 1'-0" | 06

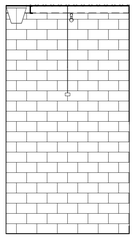

CHEMICAL ROOM 1002 - WEST | 1/4" = 1'-0" | 21

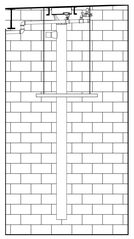

CHEMICAL ROOM 1002 - SOUTH | 1/4" = 1'-0" | 17

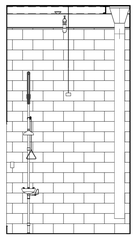

CHEMICAL ROOM 1002 - EAST | 1/4" = 1'-0" | 13

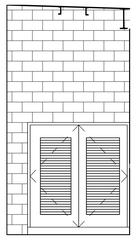

CHEMICAL ROOM 1002 - NORTH | 1/4" = 1'-0" | 09

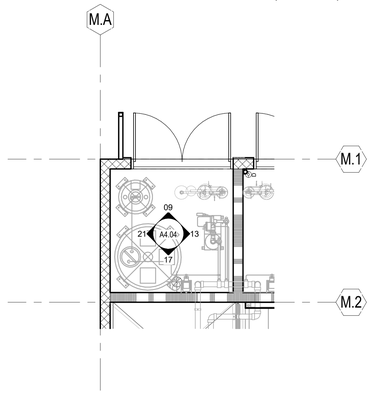

1002 - CHEMICAL ROOM FLOOR PLAN | 1/4" = 1'-0" | 05

KEYNOTES

IDENTIFICATION STAMP
DIV. OF THE STATE ARCHITECT
APP: 02-119490 INC:
REVIEWED FOR
SS ☑ FLS ☑ ACS ☑
DATE: 09/13/2022

LEGEND

ALIGN FINISHES

XX FINISH TAG, REFER TO FINISH PLANS.

1i RESTROOM ACCESSORY TAG, SEE SCHEDULE BELOW

GENERAL NOTES

1. FOR INTERIOR FINISHES SEE FINISH FLOOR PLANS & FINISH LEGEND.
2. ALL DIMENSIONS OF WALLS ARE FROM FACE OF STUD U.N.O. FOR WALL TYPE, SEE FLOOR PLAN.
3. ALL DIMENSIONS OF FIXTURES ARE FROM FACE OF FINISH TO CENTER OF FIXTURE U.N.O.
4. ALL PLUMBING FIXTURES TO HAVE SOLID BLOCKING AS REQUIRED BY CODE.
5. FOR TOILET FIXTURES AND MOUNTING HEIGHTS, RE:05/G0.81
6. CONTRACTOR COORDINATE WITH TOILET ACCESSORIES SCHEDULE TO PROVIDE RECESSED/ SEMI-RECESSED CONDITIONS (WHERE OCCURS) AND COORDINATE MOUNTING LOCATION FOR BACKING PLATES. FOR BACKING DETAIL, RE:
7. FLOOR DRAIN DETAILS, RE: 01/A9.71
8. REFER TO MANUFACTURER'S TOILET ACCESSORY INSTALLATION AND OTHER MOUNTING INSTRUCTIONS AND PROVIDE WALL BACKING AND OTHER REQUIRED SUPPORT AS INDICATED THEREIN.
9. ALL ACCESSIBLE STALLS: TOILET PARTITION DOOR WIDTHS TO BE 36" (34" MIN. CLEAR) PARTITION STILE WIDTH SHALL NOT EXCEED 4". FLUSH VALVE TO BE LOCATED AT WIDE SIDE OF SPACE.
10. FOR SIGNAGE DETAILS AND MOUNTING HEIGHTS, RE: 13/A10.11
11. FOR TOILET PARTITION DETAILS, RE: 06/A9.41

LPA
ARCHITECTURE ENGINEERING INTERIORS
LANDSCAPE ARCHITECTURE PLANNING

916-287-2400 Office
916-287-2401 Fax
LPADesignStudios.com
431 I Street,
Suite 107
Sacramento, California 95814

LICENSED ARCHITECT
JOANNE M. MAY
C-33172
REN 05-31-23
STATE OF CALIFORNIA

This document and all other project documents, ideas, aesthetics and designs incorporated therein are instruments of service. All project documents are copyright protected, are the property of LPA, Inc. (LPA) and cannot be lawfully used in whole or in part for any project or purpose except as set forth in the contractual agreement between LPA and its Client. The unauthorized disclosure and/or use of the project documents (including the creation of derivative works), may give rise to liability for copyright infringement, unlawful disclosure, use or misappropriation of property rights held by LPA. The unauthorized use of the project documents will give rise to the recovery of monetary losses and damages including attorney fees and costs for which the unauthorized user will be held liable.
Project documents describe the design intent of the work and are not a representation of as-built or existing conditions. LPA is not responsible for any discrepancies between the project documents and the existing conditions.

© LPA, Inc.

DAVIS SR HIGH SCHOOL
AQUATICS CENTER
315 W 14TH ST., DAVIS, CA 95616

Developed for
DAVIS JOINT UNIFIED SCHOOL DISTRICT

Revision	Date

Submittal	Date
50% DD REVIEW	06/15/2021
100% DD SUBMITTAL	07/26/2021
50% CD REVIEW	10/08/2021
100% CD DSA SUBMITTAL	10/22/2021
DSA SUBMITTAL	03/24/2022

Job Number	1904413
Date Published	03/24/2022
Checked By	Checker
Scale	

ENLARGED FLOOR PLANS

A4.04

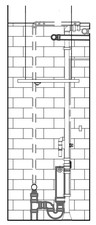

FIRE RISER ROOM 1019 - WEST | 1/4" = 1'-0" | 23

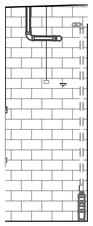

FIRE RISER ROOM 1019 - SOUTH | 1/4" = 1'-0" | 19

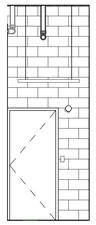

FIRE RISER ROOM 1019 - EAST | 1/4" = 1'-0" | 15

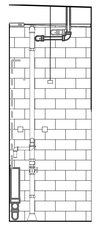

FIRE RISER ROOM 1019 - NORTH | 1/4" = 1'-0" | 11

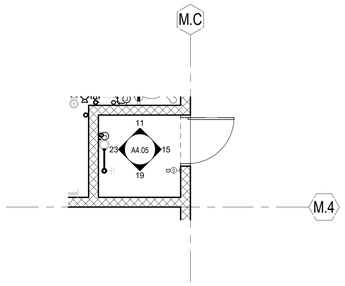

1019 - FIRE RISER ROOM FLOOR PLAN | 1/4" = 1'-0" | 07

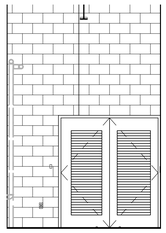

STORAGE ROOM 1005 - WEST | 1/4" = 1'-0" | 22

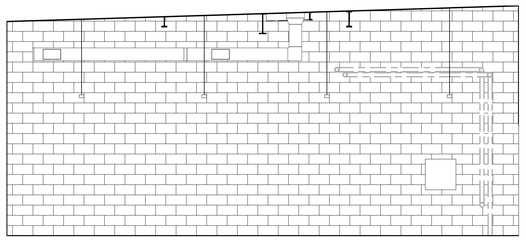

STORAGE ROOM 1005 - SOUTH | 1/4" = 1'-0" | 14

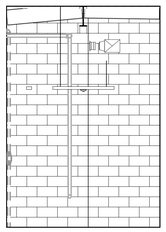

STORAGE ROOM 1005 - EAST | 1/4" = 1'-0" | 21

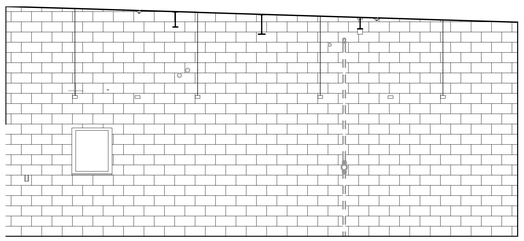

STORAGE ROOM 1005 - NORTH | 1/4" = 1'-0" | 13

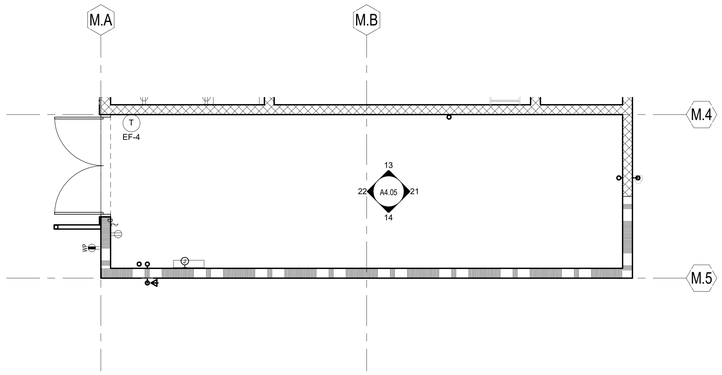

1005 - STORAGE ROOM FLOOR PLAN | 1/4" = 1'-0" | 05

KEYNOTES

LEGEND

ALIGN FINISHES

XX FINISH TAG, REFER TO FINISH PLANS.

1i RESTROOM ACCESSORY TAG, SEE SCHEDULE BELOW

GENERAL NOTES

1. FOR INTERIOR FINISHES SEE FINISH FLOOR PLANS & FINISH LEGEND.
2. ALL DIMENSIONS OF WALLS ARE FROM FACE OF STUD U.N.O. FOR WALL TYPE, SEE FLOOR PLAN.
3. ALL DIMENSIONS OF FIXTURES ARE FROM FACE OF FINISH TO CENTER OF FIXTURE U.N.O.
4. ALL PLUMBING FIXTURES TO HAVE SOLID BLOCKING AS REQUIRED BY CODE.
5. FOR TOILET FIXTURES AND MOUNTING HEIGHTS, RE:05/G0.81
6. CONTRACTOR COORDINATE WITH TOILET ACCESSORIES SCHEDULE TO PROVIDE RECESSED/ SEMI-RECESSED CONDITIONS (WHERE OCCURS) AND COORDINATE MOUNTING LOCATION FOR BACKING PLATES. FOR BACKING DETAIL, RE:
7. FLOOR DRAIN DETAILS, RE: 01/A9.71
8. REFER TO MANUFACTURER'S TOILET ACCESSORY INSTALLATION AND OTHER MOUNTING INSTRUCTIONS AND PROVIDE WALL BACKING AND OTHER REQUIRED SUPPORT AS INDICATED THEREIN.
9. ALL ACCESSIBLE STALLS: TOILET PARTITION DOOR WIDTHS TO BE 36" (34" MIN. CLEAR) PARTITION STILE WIDTH SHALL NOT EXCEED 4". FLUSH VALVE TO BE LOCATED AT WIDE SIDE OF SPACE.
10. FOR SIGNAGE DETAILS AND MOUNTING HEIGHTS, RE: 13/A10.11
11. FOR TOILET PARTITION DETAILS, RE: 06/A9.41

IDENTIFICATION STAMP
DIV. OF THE STATE ARCHITECT
APP: 02-119490 INC:
REVIEWED FOR
SS ☑ FLS ☑ ACS ☑
DATE: 09/13/2022

LPA
ARCHITECTURE ENGINEERING INTERIORS
LANDSCAPE ARCHITECTURE PLANNING

916-287-2400 Office
916-287-2401 Fax
LPADesignStudios.com
431 I Street,
Suite 107
Sacramento, California 95814

LICENSED ARCHITECT
JIANG WEIN
C-33172
REN 05-31-23
STATE OF CALIFORNIA

This document and all other project documents, ideas, aesthetics and designs incorporated therein are instruments of service. All project documents are copyright protected, are the property of LPA, Inc. (LPA) and cannot be lawfully used in whole or in part for any project or purpose except as set forth in the contractual agreement between LPA and its Client. The unauthorized disclosure and/or use of the project documents (including the creation of derivative works), may give rise to liability for copyright infringement, unlawful disclosure, use or misappropriation of property rights held by LPA. The unauthorized use of the project documents will give rise to the recovery of monetary losses and damages including attorney fees and costs for which the unauthorized user will be held liable.
Project documents describe the design intent of the work and are not a representation of as-built or existing conditions. LPA is not responsible for any discrepancies between the project documents and the existing conditions.

© LPA, Inc.

DAVIS SR HIGH SCHOOL
AQUATICS CENTER
315 W 14TH ST., DAVIS, CA 95616

Developed for
DAVIS JOINT UNIFIED SCHOOL DISTRICT

Revision	Date

Submittal	Date
50% DD REVIEW	06/15/2021
100% DD SUBMITTAL	07/26/2021
50% CD REVIEW	10/08/2021
100% CD DSA SUBMITTAL	10/22/2021
DSA SUBMITTAL	03/24/2022

Job Number	1904413
Date Published	03/24/2022
Checked By	Checker
Scale	

ENLARGED FLOOR PLANS

A4.05

DOOR SCHEDULE

DOOR NUMBER	HARDWARE GROUP	DOOR TYPE	DETAILS				DIMENSION		DOOR PANEL				DOOR FRAME		FIRE RATING	REMARKS
			HEAD	JAMB 1	JAMB 2	THRESHOLD	WIDTH	HEIGHT	THICKNESS	CORE	MATERIAL	FINISH	MATERIAL	FINISH		
1001A	05	A1	07/A8.51	16/A8.01	17/A8.51	05/A8.51	6' - 4"	7' - 2"	1 1/2"		HM	PT	HM	PT	NR	3' - 2" (PAIR)
1001B	05	A1	07/A8.51	17/A8.51	17/A8.51	05/A8.51	6' - 4"	7' - 2"	1 1/2"		HM	PT	HM	PT	NR	3' - 2" (PAIR)
1002	06	A1	07/A8.51	17/A8.51	16/A8.01	05/A8.51	6' - 4"	6' - 8"	1 1/2"		HM	PT	HM	PT	NR	3' - 2" (PAIR)
1003	06	A1	07/A8.51	17/A8.51	17/A8.51	05/A8.51	6' - 4"	6' - 8"	1 1/2"		HM	PT	HM	PT	NR	3' - 2" (PAIR)
1004	06	A3	07/A8.51	16/A8.01	17/A8.51	05/A8.51	6' - 4"	7' - 2"	1 1/2"		HM	PT	HM	PT	NR	3' - 2" (PAIR), PH
1005	07	A1	07/A8.51	17/A8.51	16/A8.01	05/A8.51	6' - 4"	7' - 2"	1 1/2"		HM	PT	HM	PT	45 MINS	3' - 2" (PAIR)
1006	01	D	07/A8.51	17/A8.51	17/A8.51	05/A8.51	3' - 0"	7' - 2"	1 1/2"		HM	PT	HM	PT	NR	
1007	02	B	07/A8.51	17/A8.51	17/A8.51	05/A8.51	3' - 0"	7' - 2"	1 1/2"		HM	PT	HM	PT	NR	
1008	02	B	07/A8.51	17/A8.51	17/A8.51	05/A8.51	3' - 0"	7' - 2"	1 1/2"		HM	PT	HM	PT	NR	
1009	04	B	07/A8.51	17/A8.51	17/A8.51	05/A8.51	3' - 0"	7' - 2"	1 1/2"		HM	PT	HM	PT	NR	
1010	03	C	07/A8.51	17/A8.51	17/A8.51	05/A8.51	3' - 0"	7' - 2"	1 1/2"		HM	PT	HM	PT	NR	
1011	07	B	07/A8.51	17/A8.51	17/A8.51	05/A8.51	3' - 0"	7' - 2"	1 1/2"		HM	PT	HM	PT	NR	
1012	08	B	14/A9.11	13/A9.11	13/A9.11	-	3' - 0"	7' - 2"	1 1/2"		HM	PT	HM	PT	NR	
1013	04	B	07/A8.51	17/A8.51	17/A8.51	05/A8.51	3' - 0"	7' - 2"	1 1/2"		HM	PT	HM	PT	NR	
1014	04	B	07/A8.51	16/A8.01	17/A8.51	05/A8.51	3' - 0"	7' - 2"	1 1/2"		HM	PT	HM	PT	NR	
1015	08	B	14/A9.11	13/A9.11	13/A9.11	-	3' - 0"	7' - 2"	1 1/2"		HM	PT	HM	PT	NR	
1016	02	B	07/A8.51	17/A8.51	17/A8.51	05/A8.51	3' - 0"	7' - 2"	1 1/2"		HM	PT	HM	PT	NR	
1017	02	B	07/A8.51	17/A8.51	17/A8.51	05/A8.51	3' - 0"	7' - 2"	1 1/2"		HM	PT	HM	PT	NR	
1018	10	C	07/A8.51	16/A8.01	17/A8.51	05/A8.51	3' - 0"	7' - 2"	1 1/2"		HM	PT	HM	PT	NR	
1019	10	B	11/A8.51	06/A8.51	06/A8.51	05/A8.51	3' - 0"	7' - 2"	1 1/2"		HM	PT	HM	PT	NR	

DOOR NOTES

GENERAL

1. WEATHER-STRIP ALL EXTERIOR DOORS.
2. ALL EXIT DOORS SHALL BE CAPABLE OF BEING OPENED FROM INSIDE THE SPACE TO BE EXITED WITHOUT THE USE OF A KEY OR ANY SPECIAL KNOWLEDGE OR EFFORT - 2019 CBC SECTION 1010.1.9. DOOR OPERATIONS.
3. EXIT DOORS SHALL SWING IN THE DIRECTION OF THE PATH OF EXIT TRAVEL WHERE THE AREA SERVED HAS AN OCCUPANT LOAD OF 50 OR MORE. 2019 CBC SECTION 1010.1.2.1 DIRECTION OF SWING.
4. SEE SHEET G0.82 FOR TYPICAL DOOR CLEARANCES

WINDOW NOTES

GENERAL NOTES

1. ROUGH OPENING DIMENSION TO BE FIELD VERIFIED BEFORE FABRICATION

IDENTIFICATION STAMP
DIV. OF THE STATE ARCHITECT
APP: 02-119490 INC:
REVIEWED FOR
SS ☑ FLS ☑ ACS ☑
DATE: 09/13/2022

DOOR TYPES

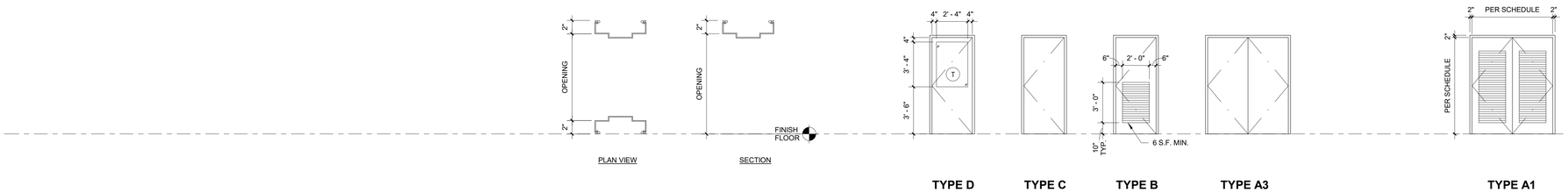

TYPE D TYPE C TYPE B TYPE A3 TYPE A1

ABBREVIATIONS

CORE

GL = GLASS (T = TEMPERED)
SC = SOLID CORE
HC = HOLLOW CORE
HCI = HOLLOW CORE INSULATED

DOOR PANEL FINISH

PT = PAINT (MORNING GLORY SW 6971 SEMI-GLOSS)
FF = FACTORY FINISH
PL = PLASTIC LAMINATE
ST =STAIN

DOOR FRAME FINISH

PT = PAINT (MORNING GLORY SW 6971)
FF = FACTORY FINISH

CLOSER

OH = OVERHEAD
FLR = FLOOR
C-OH = CONCEALED OVERHEAD

DOOR PANEL MATERIAL

AL = ALUMINUM
WD = WOOD
HM = HOLLOW METAL

DOOR FRAME MATERIAL

AL = ALUMINUM
HM = HOLLOW METAL

GLASS FINISH

FM = FILM ON DOOR & SIDELIGHT GLAZING

REMARKS

PH = PANIC HARDWARE
HO = HOLD OPEN
CR = CARD READER
BG = BULLET-RESISTANT GLASS
DS = DOOR STOP

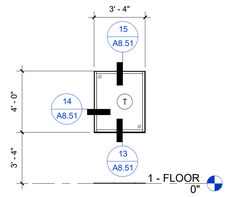

01 EXTERIOR GLAZING WALL SYSTEM
LOCATION: EXTERIOR
GLAZING: 1" IGU

ABBREVIATIONS

CORE

GL = GLASS
T = TEMPERED

WINDOW FRAME MATERIAL

AL = ALUMINUM

GLASS FINISH

FM = FILM ON DOOR & SIDELIGHT GLAZING

LPA
ARCHITECTURE ENGINEERING INTERIORS
LANDSCAPE ARCHITECTURE PLANNING

916-287-2400 Office
916-287-2401 Fax
LPADesignStudios.com
431 I Street,
Suite 107
Sacramento, California 95814

LICENSED ARCHITECT
DARNING W. KIN
No. C-33172
REN: 05-31-23
STATE OF CALIFORNIA

This document and all other project documents, ideas, aesthetics and designs incorporated therein are instruments of service. All project documents are copyright protected, are the property of LPA, Inc. (LPA) and cannot be lawfully used in whole or in part for any project or purpose except as set forth in the contractual agreement between LPA and its Client. The unauthorized disclosure and/or use of the project documents (including the creation of derivative works), may give rise to liability for copyright infringement, unlawful disclosure, use or misappropriation of property rights held by LPA. The unauthorized use of the project documents will give rise to the recovery of monetary losses and damages including attorney fees and costs for which the unauthorized user will be held liable.
Project documents describe the design intent of the work and are not a representation of as-built or existing conditions. LPA is not responsible for any discrepancies between the project documents and the existing conditions.

© LPA, Inc.

DAVIS SR HIGH SCHOOL
AQUATICS CENTER
315 W 14TH ST., DAVIS, CA 95616

Developed for
DAVIS JOINT UNIFIED SCHOOL DISTRICT

Revision	Date

Submittal	Date
50% DD REVIEW	06/15/2021
100% DD SUBMITTAL	07/26/2021
50% CD REVIEW	10/08/2021
100% CD DSA SUBMITTAL	10/22/2021
DSA SUBMITTAL	03/24/2022

Job Number	1904413
Date Published	03/24/2022
Checked By	Checker
Scale	As indicated

SCHEDULES & OPENING TYPES

A6.01

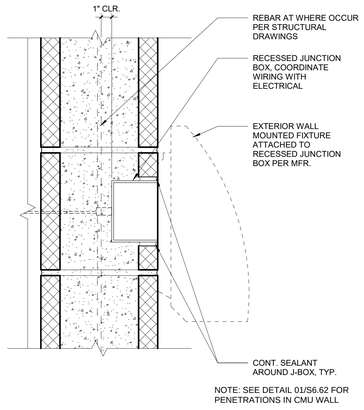

CMU WALL SURFACE MOUNTED FIXTURE | 24

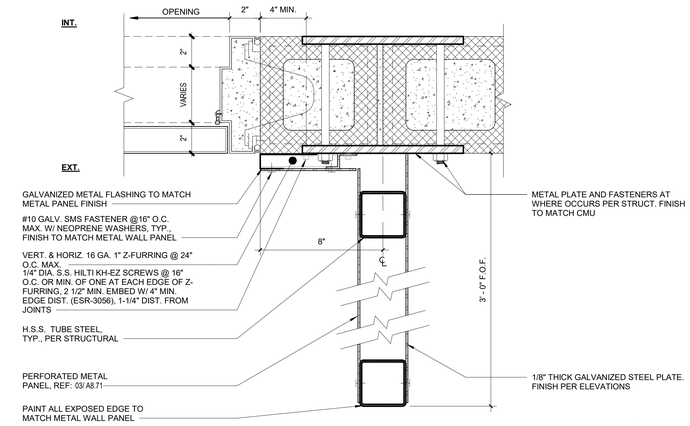

PLAN SECTION @ METAL WALL PANEL | 3" = 1'-0" | 16

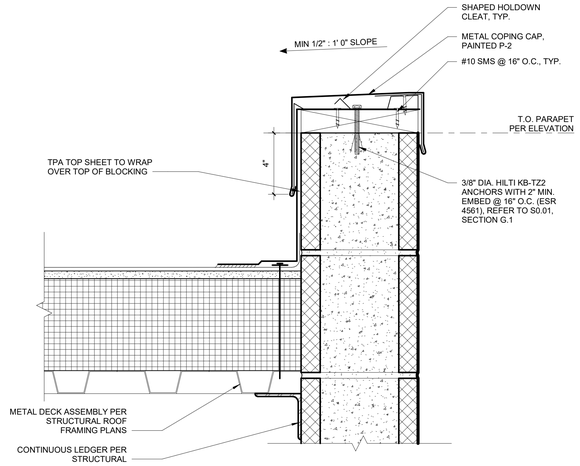

COPING @ PARAPET | 3" = 1'-0" | 08

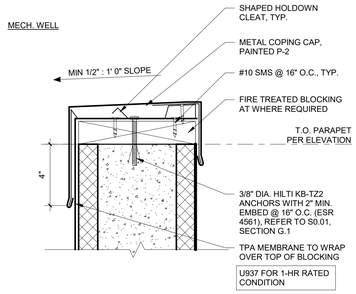

COPING @ PARAPET | 04

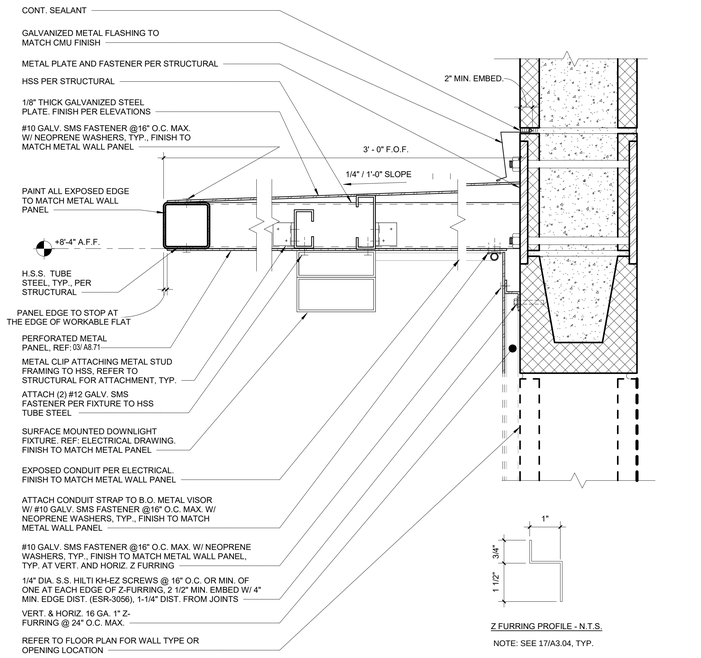

METAL PANEL VISOR @ HSS OUTRIGGER | 3" = 1'-0" | 18

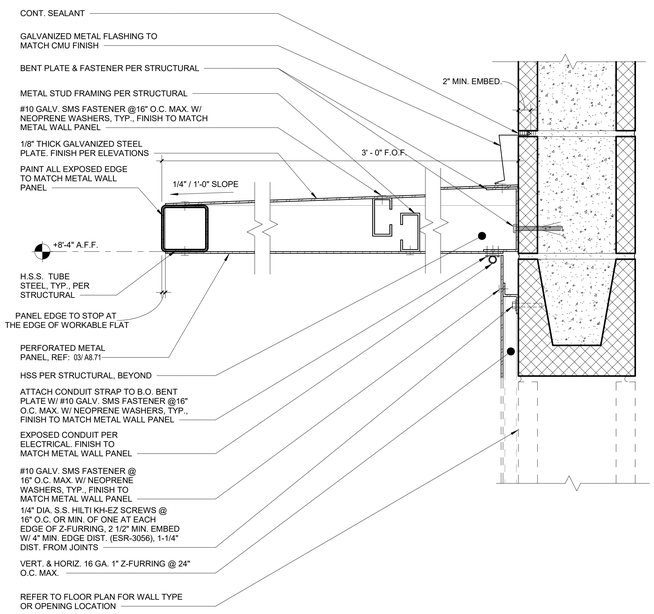

METAL PANEL VISOR | 3" = 1'-0" | 10

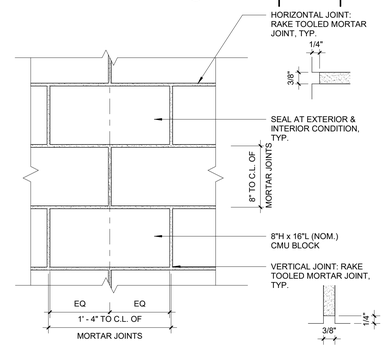

CMU RUNNING BOND PATTERN | 07

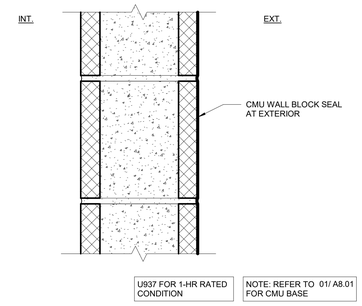

TYP. CMU WALL ASSEMBLY | 03

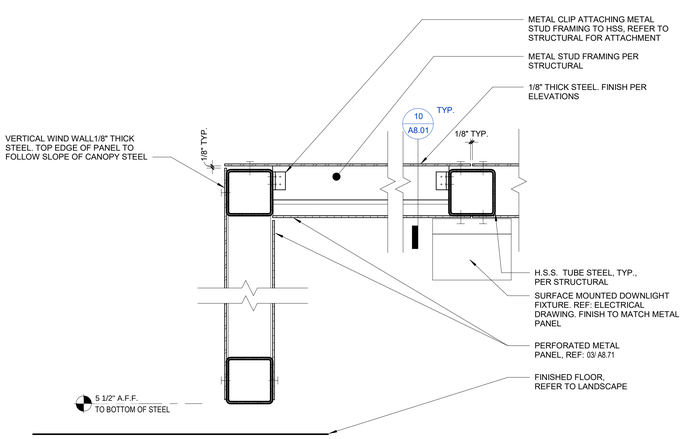

METAL PANEL WING WALL & VISOR | 3" = 1'-0" | 17

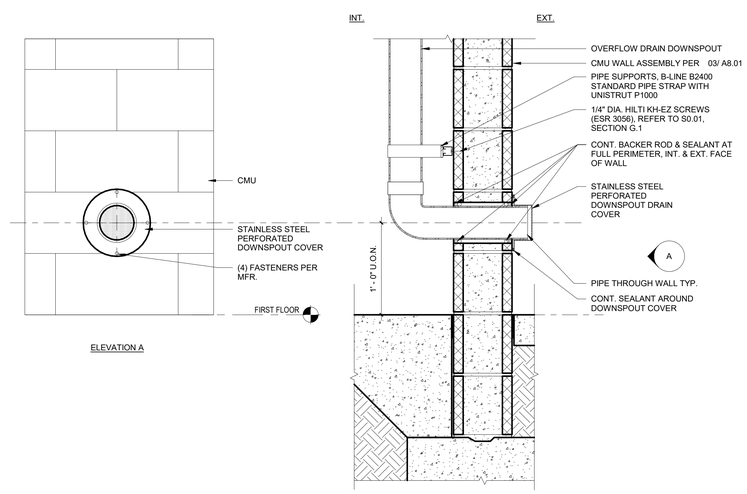

OVERFLOW ROOF DRAIN AT EXT. CMU WALL | 1 1/2" = 1'-0" | 09

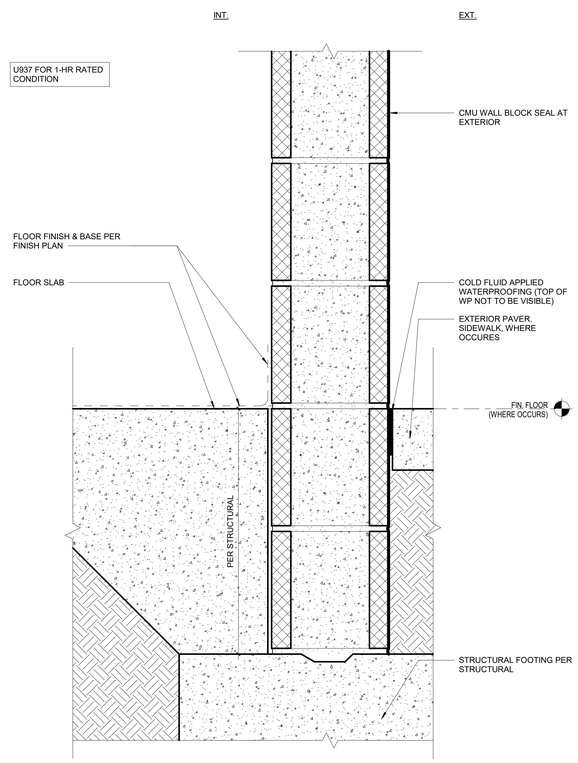

EXTERIOR CMU WALL BASE | 3" = 1'-0" | 01

IDENTIFICATION STAMP
DIV. OF THE STATE ARCHITECT
APP: 02-119490 INC:
REVIEWED FOR
SS ☑ FLS ☑ ACS ☑
DATE: 09/13/2022

LPA
ARCHITECTURE ENGINEERING INTERIORS
LANDSCAPE ARCHITECTURE PLANNING

916-287-2400 Office
916-287-2401 Fax
LPADesignStudios.com
431 I Street,
Suite 107
Sacramento, California 95814

LICENSED ARCHITECT
DARING W. MIN
No. C-33172
REN 05-31-23
STATE OF CALIFORNIA

This document and all other project documents, ideas, aesthetics and designs incorporated therein are instruments of service. All project documents are copyright protected, are the property of LPA, Inc. (LPA) and cannot be lawfully used in whole or in part for any project or purpose except as set forth in the contractual agreement between LPA and its Client. The unauthorized disclosure and/or use of the project documents (including the creation of derivative works), may give rise to liability for copyright infringement, unlawful disclosure, use or misappropriation of property rights held by LPA. The unauthorized use of the project documents will give rise to the recovery of monetary losses and damages including attorney fees and costs for which the unauthorized user will be held liable.
Project documents describe the design intent of the work and are not a representation of as-built or existing conditions. LPA is not responsible for any discrepancies between the project documents and the existing conditions.

© LPA, Inc.

DAVIS SR HIGH SCHOOL
AQUATICS CENTER
315 W 14TH ST., DAVIS, CA 95616

Developed for
DAVIS JOINT UNIFIED SCHOOL DISTRICT

Revision	Date

Submittal	Date
50% DD REVIEW	06/15/2021
100% DD SUBMITTAL	07/26/2021
50% CD REVIEW	10/08/2021
100% CD DSA SUBMITTAL	10/22/2021
DSA SUBMITTAL	03/24/2022

Job Number	1904413
Date Published	03/24/2022
Checked By	Checker
Scale	As indicated

EXTERIOR DETAILS

A8.01

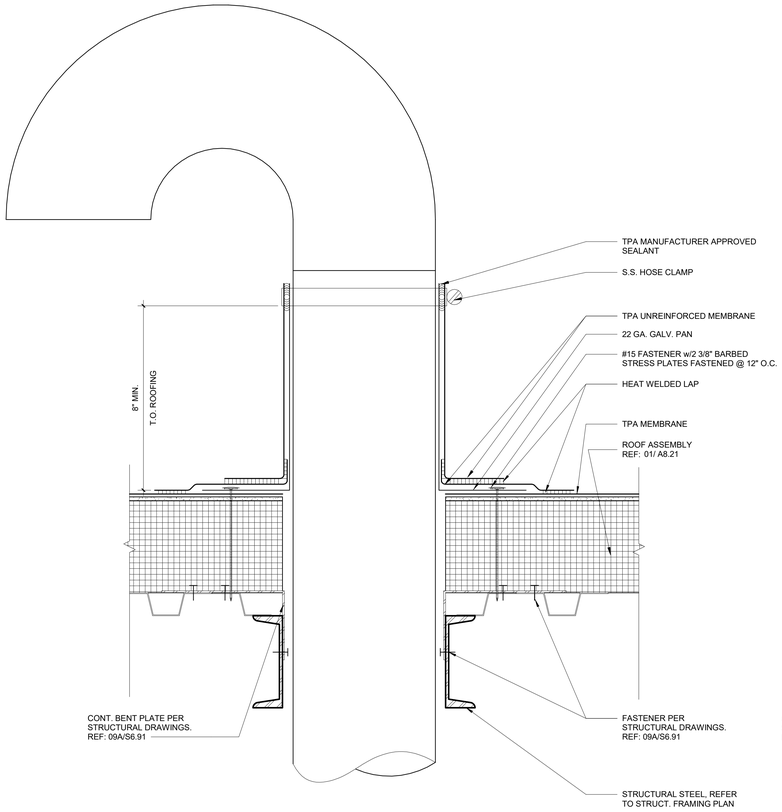

COMBUSTION AIR INTAKE ROOF PENETRATION | 3" = 1'-0" | 15

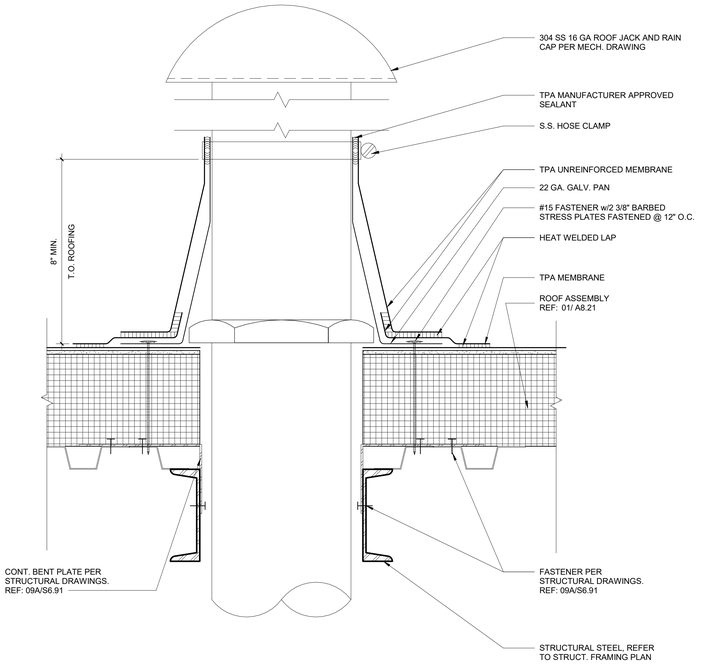

DUCT ROOF PENETRATION WITH ROOF CAP | 3" = 1'-0" | 07

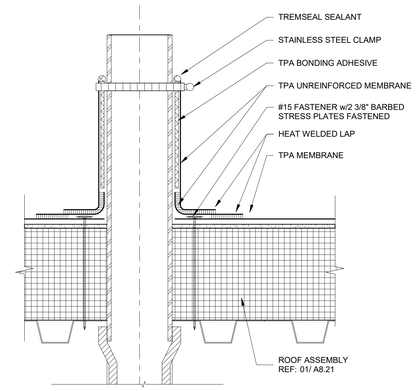

TYP PIPE PENETRATION | 3" = 1'-0" | 03

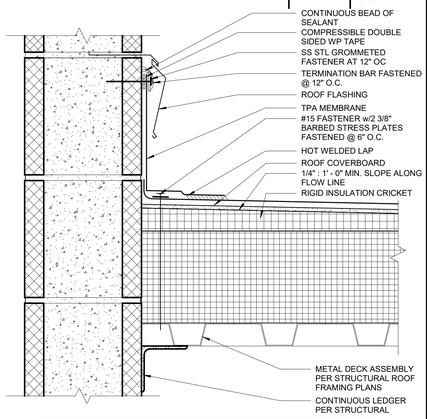

ROOF CRICKET | 3" = 1'-0" | 02

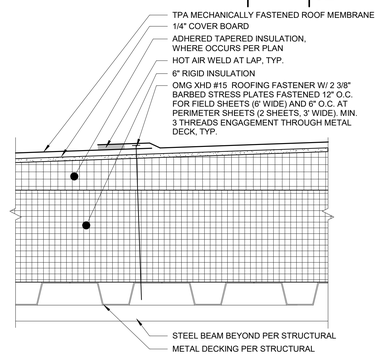

NOTE:
SEE DETAIL 21/ A8.21FOR WIND UPLIFT ZONE DIAGRAMS

WIND UPLIFT:
p= 16psf * (-0.9 - 0.18) = -17.3 psf @ ZONE 1'
16psf * (-1.7 - 0.18) = -30.1 psf @ ZONE 1
16psf * (-2.3 - 0.18) = -39.7 psf @ ZONE 2
16psf * (-3.2 - 0.18) = -54.1 psf @ ZONE 3

TYP. ROOF SECTION - METAL DECK | 3" = 1'-0" | 01

MECHANICAL BUILDING

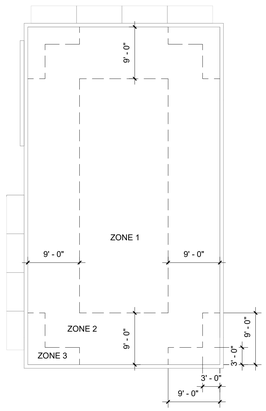

RESTROOM BUILDING

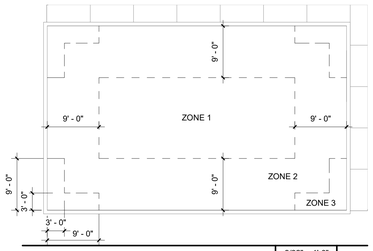

ROOF WIND UPLIFT ZONES | 3/32" = 1'-0" | 21

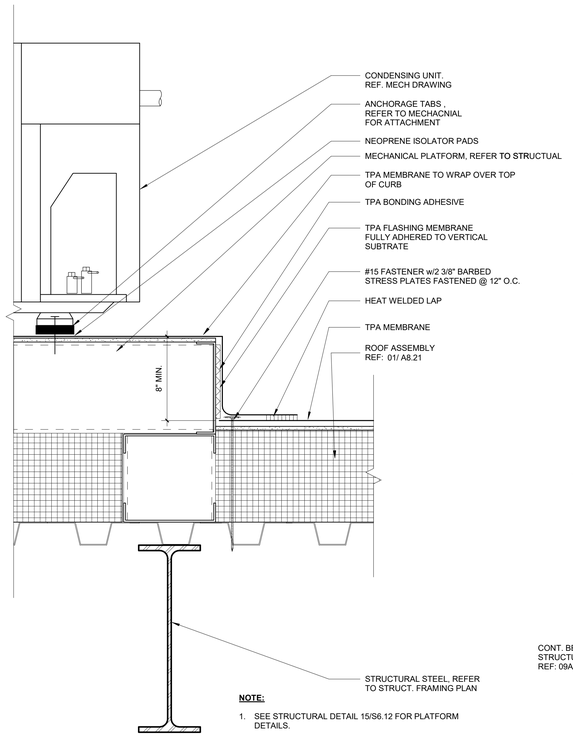

NOTE:

1. SEE STRUCTURAL DETAIL 15/S6.12 FOR PLATFORM DETAILS.

CONDENSING UNIT ON CONCRETE PAD | 3" = 1'-0" | 13

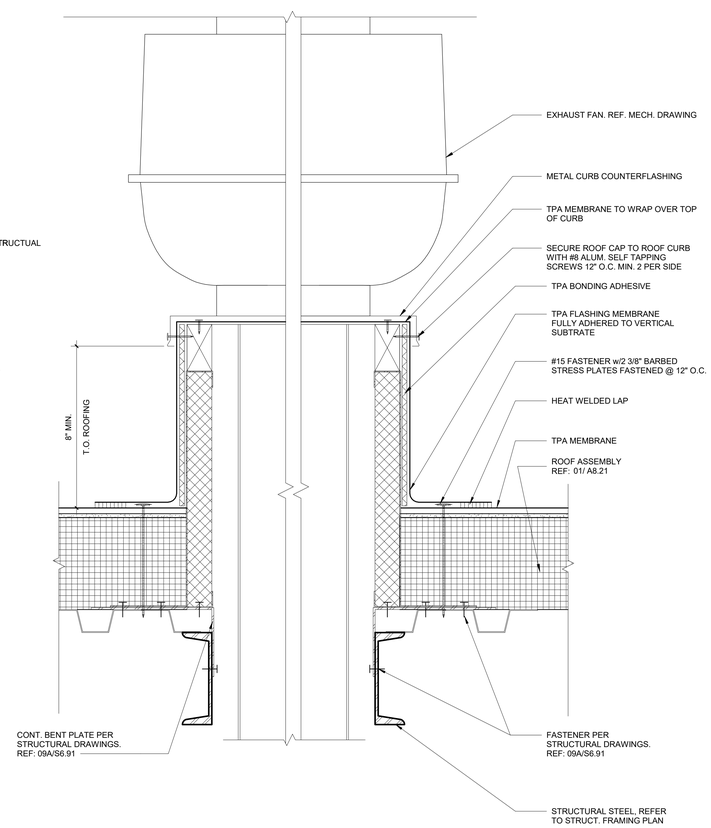

UPBLAST EXHAUST FAN FLASHING | 3" = 1'-0" | 05

IDENTIFICATION STAMP
DIV. OF THE STATE ARCHITECT
APP: 02-119490 INC:
REVIEWED FOR
SS ☑ FLS ☑ ACS ☑
DATE: 09/13/2022

LPA

ARCHITECTURE ENGINEERING INTERIORS
LANDSCAPE ARCHITECTURE PLANNING

916-287-2400 Office
916-287-2401 Fax
LPADesignStudios.com
431 I Street,
Suite 107
Sacramento, California 95814

LICENSED ARCHITECT
DOUG W. MYR
No. C-33172
REN. 05-31-23
STATE OF CALIFORNIA

This document and all other project documents, ideas, aesthetics and designs incorporated therein are instruments of service. All project documents are copyright protected, are the property of LPA, Inc. (LPA) and cannot be lawfully used in whole or in part for any project or purpose except as set forth in the contractual agreement between LPA and its Client. The unauthorized disclosure and/or use of the project documents (including the creation of derivative works), may give rise to liability for copyright infringement, unlawful disclosure, use or misappropriation of property rights held by LPA. The unauthorized use of the project documents will give rise to the recovery of monetary losses and damages including attorney fees and costs for which the unauthorized user will be held liable.
Project documents describe the design intent of the work and are not a representation of as-built or existing conditions. LPA is not responsible for any discrepancies between the project documents and the existing conditions.

© LPA, Inc.

DAVIS SR HIGH SCHOOL AQUATICS CENTER
315 W 14TH ST., DAVIS, CA 95616

Developed for
DAVIS JOINT UNIFIED SCHOOL DISTRICT

Revision	Date

Submittal	Date
50% DD REVIEW	06/15/2021
100% DD SUBMITTAL	07/26/2021
50% CD REVIEW	10/08/2021
100% CD DSA SUBMITTAL	10/22/2021
DSA SUBMITTAL	03/24/2022

Job Number	1904413
Date Published	03/24/2022
Checked By	Checker
Scale	3" = 1'-0"

ROOF DETAILS

A8.21

TT

ENGINEERING JUDGMENT FIRESTOP DETAIL

PROJECT : DAVIS HS AQUATICS
CONTRACTOR : LPA, INC.
F-RATING = 1-HR. (SEE NOTE NO. 3 BELOW)

CROSS-SECTIONAL VIEW

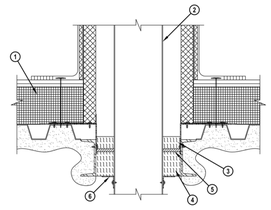

Hilti Firestop Systems	HILTI, Inc. Plano, Texas USA (800) 879-8000	Sheet 1 of 2	Drawing No.
	Designed by Raymond Bennett V.	Scale 3/32" = 1"	548479a
		Date Mar. 02, 2022	

Saving Lives through Innovation and Education

TT

ENGINEERING JUDGMENT FIRESTOP DETAIL

PROJECT : DAVIS HS AQUATICS
CONTRACTOR : LPA, INC.
F-RATING = 1-HR. (SEE NOTE NO. 3 BELOW)

1. INSULATED METAL ROOF DECK ASSEMBLY (UL CLASSIFIED DESIGN P753) (1-HR. FIRE-RATING).
2. MAXIMUM 14" x 14" RECTANGULAR SHEET METAL DUCT (MIN. 24 GA.).
3. MINIMUM 2" THICKNESS MINERAL WOOL (MIN. 4 PCF DENSITY) TIGHTLY PACKED.
4. MINIMUM 4" THICKNESS MINERAL WOOL (MIN. 4 PCF DENSITY) TIGHTLY PACKED, RECESSED TO ACCOMMODATE SEALANT, AND FLUSH WITH BOTTOM OF STEEL CHANNEL.
5. MINIMUM 1/2" DEPTH HILTI FS-ONE MAX INTUMESCENT FIRESTOP SEALANT.
6. AFTER SEALING SPACE BETWEEN DUCT AND ROOF DECK ASSEMBLY WITH HILTI FS-ONE MAX, FASTEN STEEL ANGLE (L2 x 2 x MIN. 18 GA.) TO DUCT WITH NO. 8 (OR LARGER) STEEL SHEET METAL SCREWS ON ALL FOUR SIDES OF DUCT (SPACED MAX. 6" C/C). ANGLE DOES NOT HAVE TO BE FASTENED TO ROOF DECK ASSEMBLY.

NOTES : 1. MAXIMUM SIZE OF OPENING = 24" x 24".
2. ANNULAR SPACE = MINIMUM 2". MAXIMUM 5".
3. FIRE-RATING OF ASSEMBLY IS DEPENDENT UPON THE PERFORMANCE OF ROOF ASSEMBLY UNDER FIRE CONDITIONS.

THIS ENGINEERING JUDGMENT REPRESENTS A FIRESTOP SYSTEM THAT WOULD BE EXPECTED TO PASS THE STATED RATINGS IF TESTED. (REFERENCE : UL/cUL SYSTEM NO. C-AJ-8143 & C-AJ-7104)

Hilti Firestop Systems	HILTI, Inc. Plano, Texas USA (800) 879-8000	Sheet 2 of 2	Drawing No.
	Designed by Raymond Bennett V.	Scale	548479a
		Date Mar. 02, 2022	

Saving Lives through Innovation and Education

DUCT PENETRATION AT RATED BARE METAL DECK | 3" = 1'-0" | 16

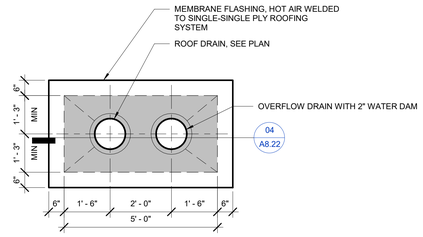

NOTES:
1. ROOF AND OVERFLOW DRAIN LOCATIONS & CONFIGURATION PER ARCHITECTURAL & PLUMBING ROOF PLAN.

ROOF - OVERFLOW DRAIN | 12

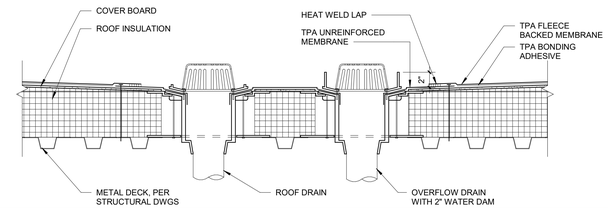

ROOF DRAIN AT METAL DECK | 1 1/2" = 1'-0" | 04

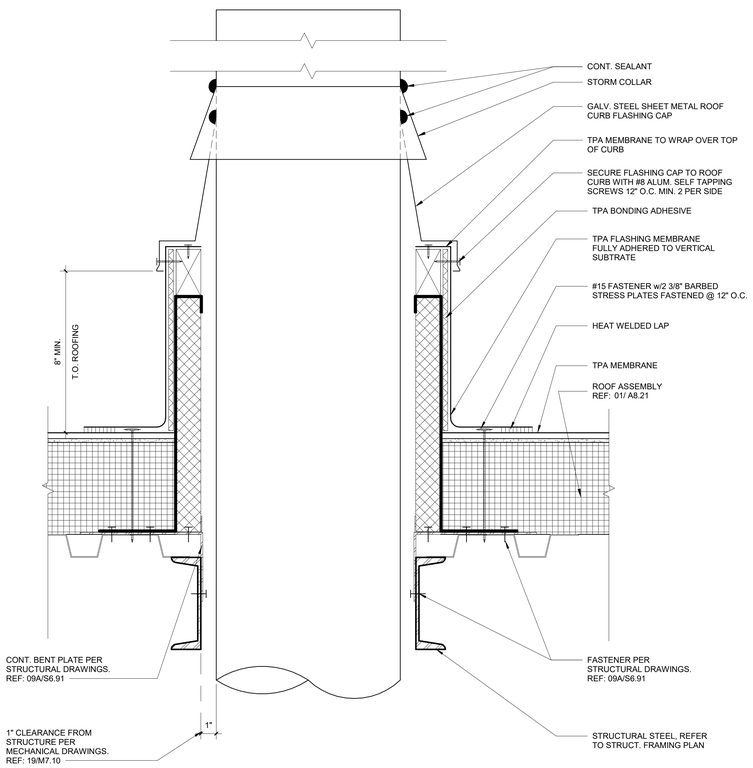

VENT ROOF PENETRATION | 3" = 1'-0" | 18

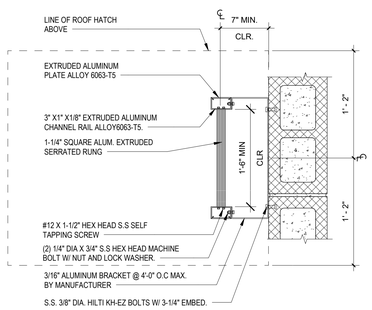

INTERIOR PREMANUFACTURED LADDER PLAN | 17

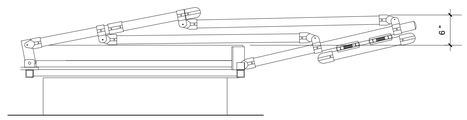

CLOSED POSITION

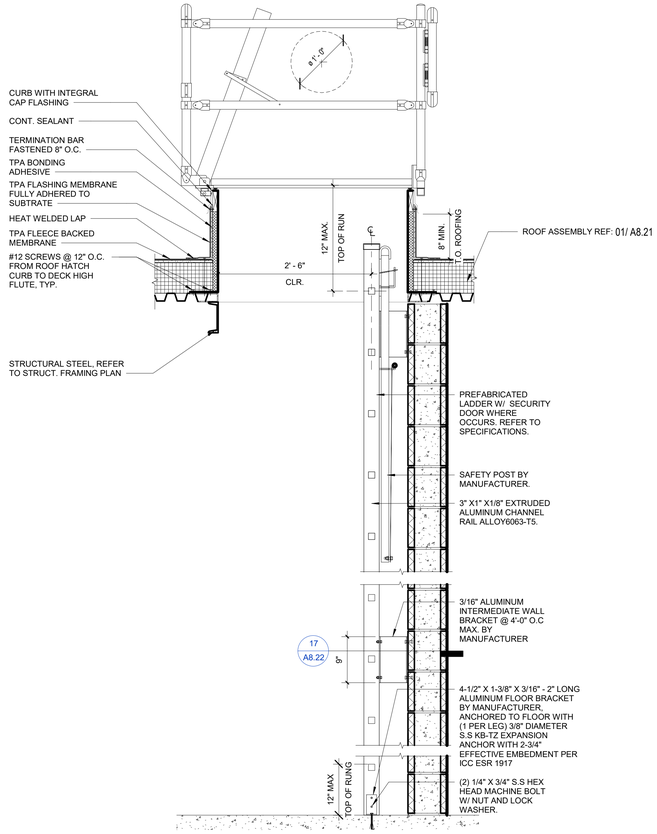

ROOF HATCH & LADDER AT METAL DECK | 1" = 1'-0" | 09

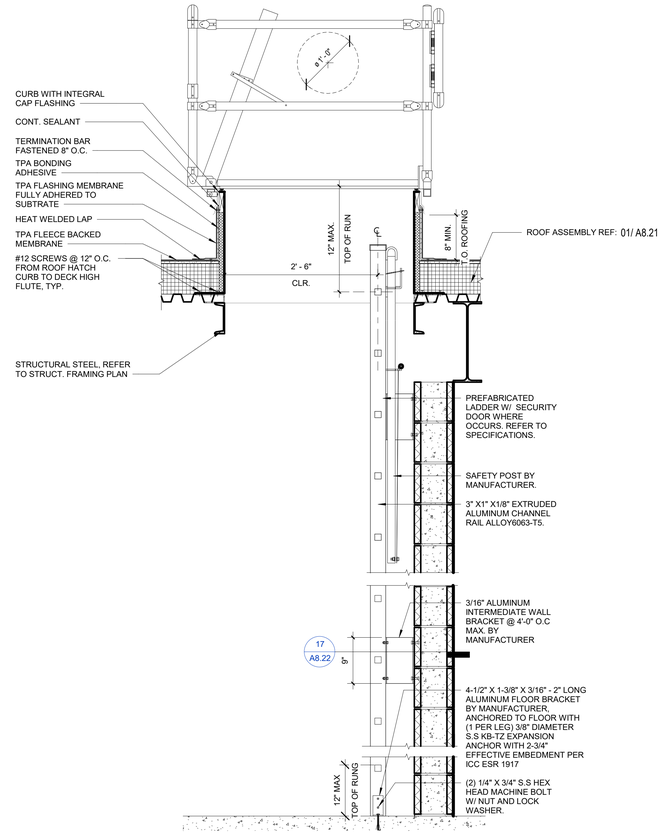

ROOF HATCH & LADDER AT METAL DECK @ NON-LOAD BEARING WALL | 1" = 1'-0" | 01

IDENTIFICATION STAMP
DIV. OF THE STATE ARCHITECT
APP: 02-119490 INC:
REVIEWED FOR
SS ☑ FLS ☑ ACS ☑
DATE: 09/13/2022

LPA

ARCHITECTURE ENGINEERING INTERIORS
LANDSCAPE ARCHITECTURE PLANNING

916-287-2400 Office
916-287-2401 Fax
LPADesignStudios.com
431 I Street,
Suite 107
Sacramento, California 95814

LICENSED ARCHITECT
Chong W. Ai Pa
No. C-33172
Exp. 05-31-23
STATE OF CALIFORNIA

This document and all other project documents, ideas, aesthetics and designs incorporated therein are instruments of service. All project documents are copyright protected, are the property of LPA, Inc. (LPA) and cannot be lawfully used in whole or in part for any project or purpose except as set forth in the contractual agreement between LPA and its Client. The unauthorized disclosure and/or use of the project documents (including the creation of derivative works), may give rise to liability for copyright infringement, unlawful disclosure, use or misappropriation of property rights held by LPA. The unauthorized use of the project documents will give rise to the recovery of monetary losses and damages including attorney fees and costs for which the unauthorized user will be held liable.
Project documents describe the design intent of the work and are not a representation of as-built or existing conditions. LPA is not responsible for any discrepancies between the project documents and the existing conditions.

© LPA, Inc.

DAVIS SR HIGH SCHOOL
AQUATICS CENTER
315 W 14TH ST., DAVIS, CA 95616

Developed for
DAVIS JOINT UNIFIED SCHOOL DISTRICT

Revision	Date

Submittal	Date
50% DD REVIEW	06/15/2021
100% DD SUBMITTAL	07/26/2021
50% CD REVIEW	10/08/2021
100% CD DSA SUBMITTAL	10/22/2021
DSA SUBMITTAL	03/24/2022

Job Number	1904413
Date Published	03/24/2022
Checked By	Checker
Scale	As indicated

ROOF DETAILS

A8.22

IDENTIFICATION STAMP
DIV. OF THE STATE ARCHITECT
APP: 02-119490 INC:
REVIEWED FOR
SS ☑ FLS ☑ ACS ☑
DATE: 09/13/2022

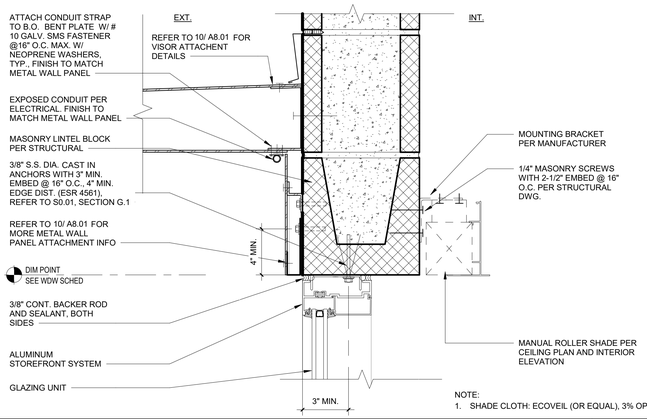

NOTE:
1. SHADE CLOTH: ECOVEIL (OR EQUAL), 3% OPENING.

ALUM. STOREFRONT HEAD | 3" = 1'-0" | 15

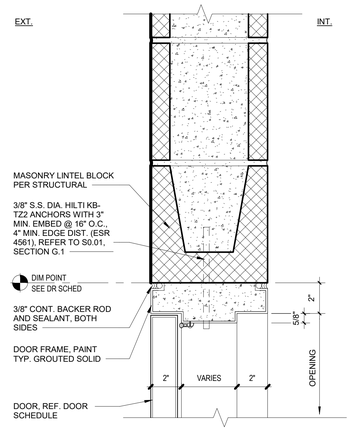

EXT. H.M. DOOR HEAD | 11

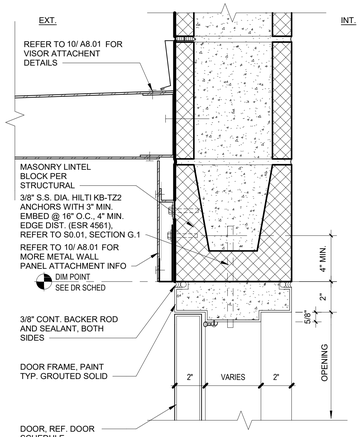

EXT. H.M. DOOR HEAD | 07

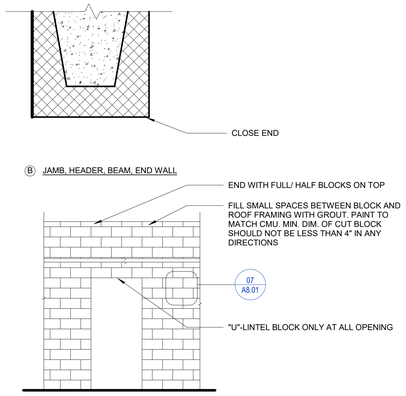

TYP. CMU OPENING OR END WALL | 03

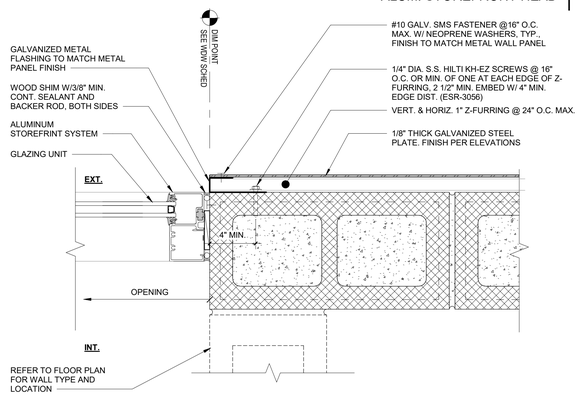

ALUM. STOREFRONT JAMB | 3" = 1'-0" | 14

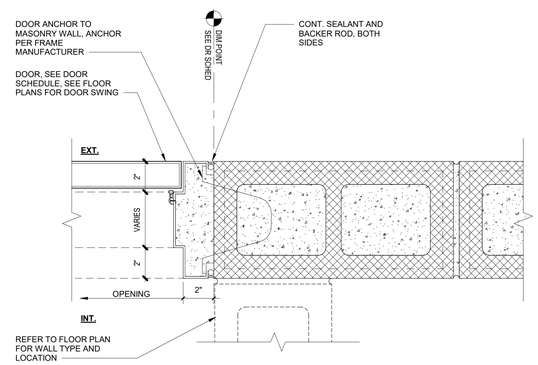

EXT. H.M. DOOR JAMB | 3" = 1'-0" | 06

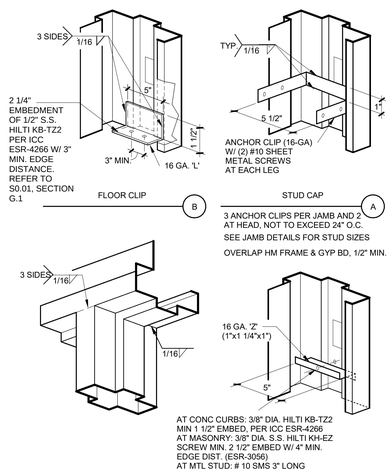

NOTES

1. REFER TO PROFILES.
2. ALL HOLLOW METAL FRAME/JAMBS SHALL BE CUT FOR STANDARD UNIT LOCK STRIKES 3/4" HIGH.
3. FRAME DIMENSIONS ARE FROM FINISH PAVING. FRAME DIMENSIONS MAY VARY DUE TO FINISH MATERIALS.
4. SEE 'LABELS' ON DOOR SCHEDULE FOR REQUIRED RATED DOORS.
5. VERIFY ALL DOOR AND FRAME OPENING SIZES AND WALL AND DOOR FRAME WIDTHS ON SITE.
6. PER CBC 716.5, APPROVED FIRE DOOR HARDWARE AND FIRE DOOR FRAMES INCLUDING THE ANCHORAGE THEREOF SHALL BE INSTALLED IN ACCORDANCE WITH THEIR LISTING.
7. ADHERE TO UL10C AND NFPA 252 FOR INSTALLATION OF FIRE DOOR ASSEMBLIES.

TYP. HM DOOR AND FRAME DETAILS | 01

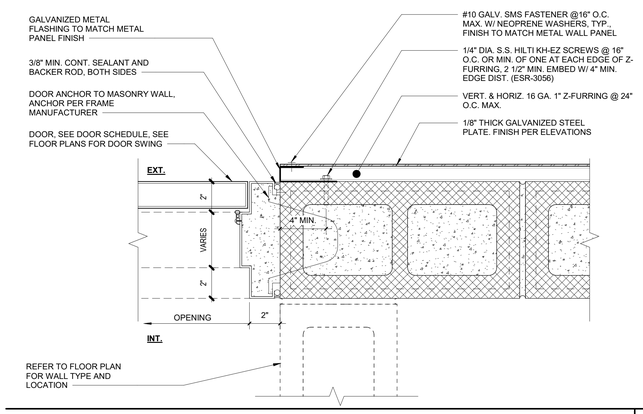

EXT. H.M. DOOR JAMB | 3" = 1'-0" | 17

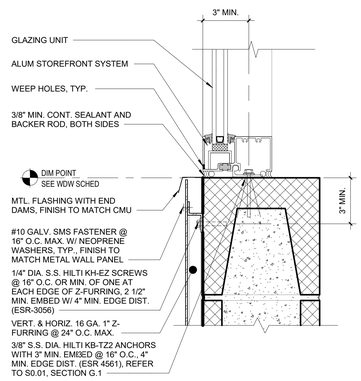

ALUM. STOREFRONT SILL | 13

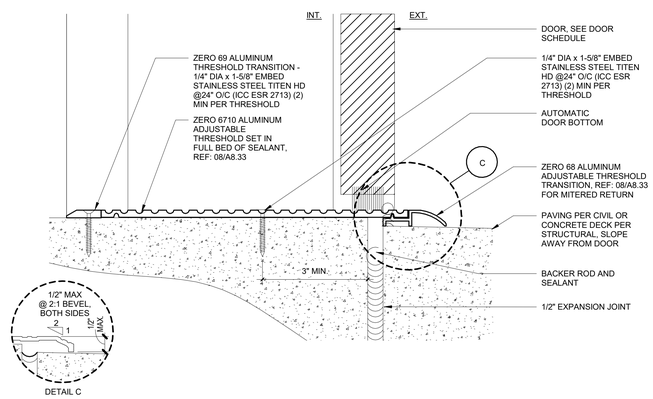

EXTERIOR HM DOOR THRESHOLD | 6" = 1'-0" | 05

LPA
ARCHITECTURE ENGINEERING INTERIORS
LANDSCAPE ARCHITECTURE PLANNING

916-287-2400 Office
916-287-2401 Fax
LPADesignStudios.com
431 I Street,
Suite 107
Sacramento, California 95814

LICENSED ARCHITECT
C-33172
REN 06-31-22
STATE OF CALIFORNIA

This document and all other project documents, ideas, aesthetics and designs incorporated therein are instruments of service. All project documents are copyright protected, are the property of LPA, Inc. (LPA) and cannot be lawfully used in whole or in part for any project or purpose except as set forth in the contractual agreement between LPA and its Client. The unauthorized disclosure and/or use of the project documents (including the creation of derivative works), may give rise to liability for copyright infringement, unlawful disclosure, use or misappropriation of property rights held by LPA. The unauthorized use of the project documents will give rise to the recovery of monetary losses and damages including attorney fees and costs for which the unauthorized user will be held liable.
Project documents describe the design intent of the work and are not a representation of as-built or existing conditions. LPA is not responsible for any discrepancies between the project documents and the existing conditions.

© LPA, Inc.

DAVIS SR HIGH SCHOOL AQUATICS CENTER
315 W 14TH ST., DAVIS, CA 95616

Developed for
DAVIS JOINT UNIFIED SCHOOL DISTRICT

Revision	Date

Submittal	Date
50% DD REVIEW	06/15/2021
100% DD SUBMITTAL	07/26/2021
50% CD REVIEW	10/08/2021
100% CD DSA SUBMITTAL	10/22/2021
DSA SUBMITTAL	03/24/2022

Job Number	1904413
Date Published	03/24/2022
Checked By	Checker
Scale	As indicated

OPENING DETAILS

A8.51

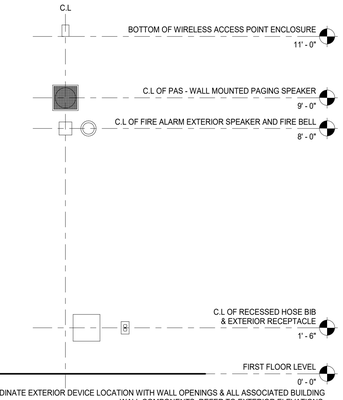

NOTE: COORDINATE EXTERIOR DEVICE LOCATION WITH WALL OPENINGS & ALL ASSOCIATED BUILDING WALL COMPONENTS; REFER TO EXTERIOR ELEVATIONS.

EXTERIOR MOUNTING HEIGHTS | 04

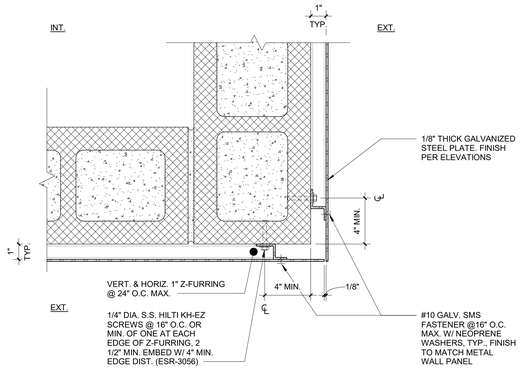

METAL WALL PANEL CORNER CONDITION | 3" = 1'-0" | 07

NOTE: STEEL GRADE, ASTM A36

DIAMETER: 1/4"
CENTER SPACING: 1/2" STAGGER CENTER
OPEN AREA PERCENTAGE: 23%
HOLES PER SQUARE INCH: 4.69
THICKNESS: 1/8"

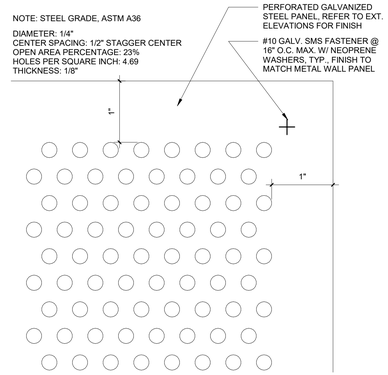

PERFORATED MTL PANEL ENLARGEMENT | 12" = 1'-0" | 03

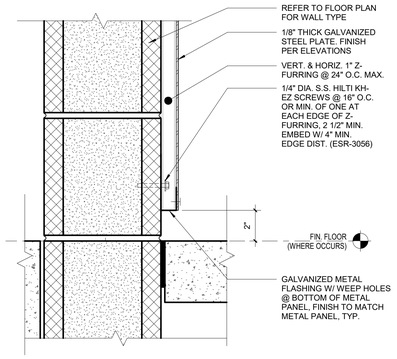

MTL. WALL PANEL BOTTOM CONDITION | 3" = 1'-0" | 10

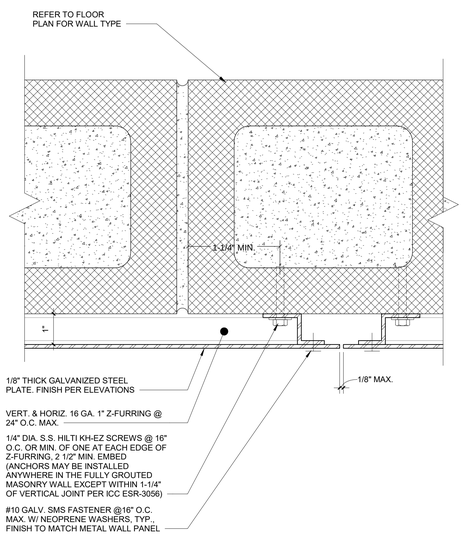

METAL WALL PANEL JOINTS | 6" = 1'-0" | 13

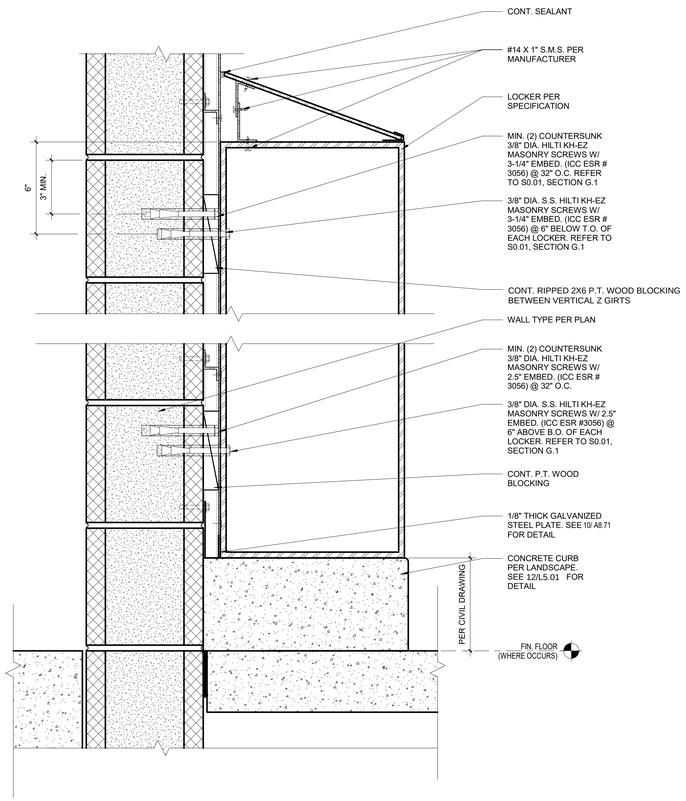

METAL LOCKER ANCHORAGE | 3" = 1'-0" | 01

IDENTIFICATION STAMP
DIV. OF THE STATE ARCHITECT
APP: 02-119490 INC:
REVIEWED FOR
SS ☑ FLS ☑ ACS ☑
DATE: 09/13/2022

LPA

ARCHITECTURE ENGINEERING INTERIORS
LANDSCAPE ARCHITECTURE PLANNING

916-287-2400 Office

916-287-2401 Fax

LPADesignStudios.com

431 I Street,
Suite 107
Sacramento, California 95814

LICENSED ARCHITECT
CHING W. MIN
C-33172
REN 05-31-23
STATE OF CALIFORNIA

This document and all other project documents, ideas, aesthetics and designs incorporated therein are instruments of service. All project documents are copyright protected, are the property of LPA, Inc. (LPA) and cannot be lawfully used in whole or in part for any project or purpose except as set forth in the contractual agreement between LPA and its Client. The unauthorized disclosure and/or use of the project documents (including the creation of derivative works), may give rise to liability for copyright infringement, unlawful disclosure, use or misappropriation of property rights held by LPA. The unauthorized use of the project documents will give rise to the recovery of monetary losses and damages including attorney fees and costs for which the unauthorized user will be held liable.
Project documents describe the design intent of the work and are not a representation of as-built or existing conditions. LPA is not responsible for any discrepancies between the project documents and the existing conditions.

© LPA, Inc.

DAVIS SR HIGH SCHOOL
AQUATICS CENTER
315 W 14TH ST., DAVIS, CA 95616

Developed for
DAVIS JOINT UNIFIED SCHOOL DISTRICT

Revision	Date

Submittal	Date
50% DD REVIEW	06/15/2021
100% DD SUBMITTAL	07/26/2021
50% CD REVIEW	10/08/2021
100% CD DSA SUBMITTAL	10/22/2021
DSA SUBMITTAL	03/24/2022

Job Number	1904413
Date Published	03/24/2022
Checked By	Checker
Scale	As indicated

MISC. DETAILS

A8.71

IDENTIFICATION STAMP
DIV. OF THE STATE ARCHITECT
APP: 02-119490 INC:
REVIEWED FOR
SS ☑ FLS ☑ ACS ☑
DATE: 09/13/2022

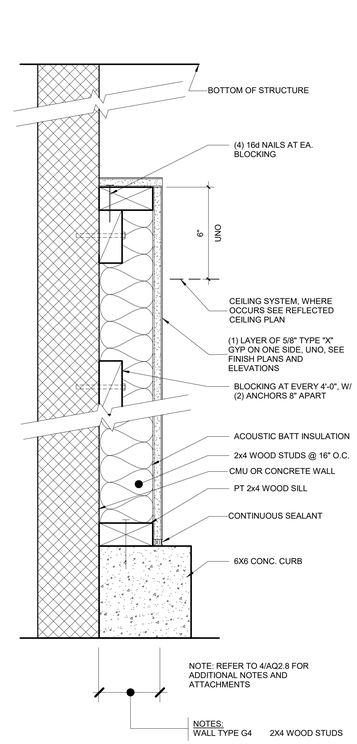

WALL TYPE "G" | G

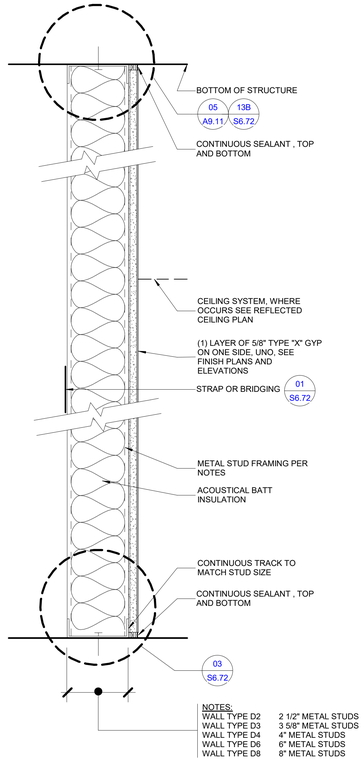

WALL TYPE "D" | 3" = 1'-0" | D

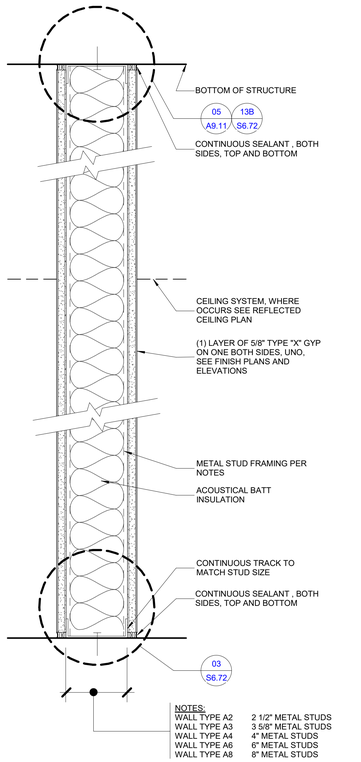

WALL TYPE "A" | A

LPA

ARCHITECTURE ENGINEERING INTERIORS
LANDSCAPE ARCHITECTURE PLANNING

916-287-2400 Office

916-287-2401 Fax

LPADesignStudios.com

431 I Street,
Suite 107
Sacramento, California 95814

LICENSED ARCHITECT
CHUNG W. MIX
C-33172
REN 05-31-23
STATE OF CALIFORNIA

This document and all other project documents, ideas, aesthetics and designs incorporated therein are instruments of service. All project documents are copyright protected, are the property of LPA, Inc. (LPA) and cannot be lawfully used in whole or in part for any project or purpose except as set forth in the contractual agreement between LPA and its Client. The unauthorized disclosure and/or use of the project documents (including the creation of derivative works), may give rise to liability for copyright infringement, unlawful disclosure, use or misappropriation of property rights held by LPA. The unauthorized use of the project documents will give rise to the recovery of monetary losses and damages including attorney fees and costs for which the unauthorized user will be held liable.
Project documents describe the design intent of the work and are not a representation of as-built or existing conditions. LPA is not responsible for any discrepancies between the project documents and the existing conditions.

© LPA, Inc.

DAVIS SR HIGH SCHOOL
AQUATICS CENTER
315 W 14TH ST., DAVIS, CA 95616

Developed for
DAVIS JOINT UNIFIED SCHOOL DISTRICT

Revision	Date

Submittal	Date
50% DD REVIEW	06/15/2021
100% DD SUBMITTAL	07/26/2021
50% CD REVIEW	10/08/2021
100% CD DSA SUBMITTAL	10/22/2021
DSA SUBMITTAL	03/24/2022

Job Number	1904413
Date Published	03/24/2022
Checked By	Checker
Scale	3" = 1'-0"

WALL TYPES

A9.01

Design No. P753

December 16, 2021

Restrained Assembly Ratings — 1, 1-1/2, 2 or 3 Hr (See Item 10)
Unrestrained Assembly Ratings — 3/4, 1, 1-1/2, 2 or 3 Hr (See Item 10)
Unrestrained Beam Ratings — 1, 1-1/2, 2 or 3 Hr (See Item 10)
Restricted Load Condition — See Items 1 and 10C
Loading Determined by Allowable Stress Design Method or Load and Resistance Factor Design Method published by the American Institute of Steel Construction, or in accordance with the relevant Limit State Design provisions of Part 4 of the National Building Code of Canada
*** Indicates products shall bear the UL or cUL Certification Mark for jurisdictions employing the UL or cUL Certification (such as Canada), respectively.**

3/12, 1:39 PM BKUVP753 | UL Product iQ

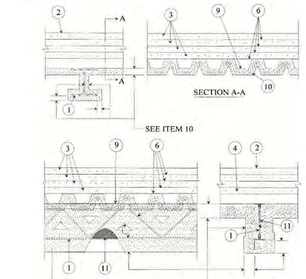

1. **Beam —** Min W8x28 or Steel Joist — Min 10K1 welded or bolted to end supports. Designed per S.I.I specifications for a yield strength of 50,000 psi. Top chords shall consist of two angles measuring 1-1/2 by 1-1/2 by 0.168 in. thick, min. Bottom chords shall consist of two angles measuring 1 by 1 by 0.109 in. thick, min. The first diagonal web member at each end shall consist of a min 0.625 in. dia. round bar. All remaining web members shall consist of 0.30 in. dia. round bars, min. Bridging per S.J.I specifications.

2. **Roof Covering* —** Consisting of hot mopped or cold application bituminous materials compatible with the insulation(s) described herein which provide Class A, B or C coverings. See Roofing Materials and Systems Directory — Roof Covering Materials (TEVT).

2A. **In lieu of Item 2, roof covering consisting of single-ply Roofing Membrane*** — that is either fastened, adhered or mechanically attached as permitted under the respective manufacturer's Classification. See Fire Resistance Directory — Roof Membrane (CKCI).

2B. **Metal Roof Deck Panels*** — (Not shown) — In addition to or in lieu of Item 2 or 2A, the roof covering may consist of a mechanically fastened metal roof deck panel assembly. See Fire Resistance Directory — Metal Roof Deck Panels (CETW).

3/12, 1:39 PM BKUVP753 | UL Product iQ

1. **Roof Insulation — Foamed Plastic —** Polyisocyanurate foamed plastic insulation boards nom 48 by 48 or 96 in., to be applied in one or more layers. Boards to be installed with end joints staggered a min of 6 in. Min thickness shall be selected from the Table below. No limit on max overall thickness.

Restrained or Unrestrained Assembly Rating Hr	Min Insulation Thkns In. With Gypsum Wallboard	Without Gypsum Wallboard
1	1	2
1-1/2	1-1/2	3
2	2	3
3	2	3

ATLAS ROOFING CORP — Type ACFoam II, Tapered ACFoam II, ACFoam II FHX, Tapered ACFoam II FHX, ACFoam III, ACFoam III FHX, Tapered ACFoam III FHX, ACFoam IV, ACFoam Supreme, ACFoam Supreme FHX, AC Foam Recover Board, ACFoam Recover Board FHX

MULE-HIDE PRODUCTS CO INC — PCI-1 ISO 2

CARLISLE SYNTEC SYSTEMS, A DIVISION OF CARLISLE CONSTRUCTION MATERIALS, LLC — Types HP, HP-H, HP-N, HP-W, ThermaCOR ISO, InsulBase NH, SecurShield NH, SecurShield HD Polyiso HP-F FM, InsulBase RL, SecurShield RL, Polyiso HP-F.

DOW ROOFING SYSTEMS L L C — "Dow Tenrico Polyisocyanurate Insulation", "Dow Tenrico ISO 3000 Insulation", "Dow Tenrico ISO HP-FR".

FIRESTONE BUILDING PRODUCTS CO L L C — "ISO 95+ GL", "ISO 95+ FR", "ISO 95+ CAN", "ISO 95+ GL NH", "ISOGARD HD Composite Board" or "RESISTA", "ISOGARD GL", "ISOGARD GS".

GAF — EnergyGuard™ RA.

HUNTER PANELLA, A DIVISION OF CARLISLE CONSTRUCTION MATERIALS, LLC — H Shield, H Shield-F, H Shield-CG, H Shield-C, H Shield Premier, H Shield HD Composite, H Shield HD Composite CG, H Shield RL, H Shield CG RL, H Shield NH, H Shield-F NH, H Shield-CG NH, H Shield-C NH, H Shield Premier NH, H Shield HD Composite CG NH

MULE-HIDE PRODUCTS CO INC — Poly ISO 1, Tapered Poly ISO 1, Poly ISO 1 CNID, Tapered Poly ISO 1 CNID, Poly ISO 1 HD, Poly ISO 1-HD90, Poly ISO 1-HD Composite

JOHNS MANVILLE — EnviroX 3.25 psi, EnviroX 3, Tapered EnviroX 3, Tapered EnviroX 3.25 psi, EnviroX 3 AGF, Tapered EnviroX 3 AGF, EnviroX 3.25 psi AGF, Tapered EnviroX 3.25 psi AGF, EnviroX 2 CGF, Tapered EnviroX 2 CGF, EnviroX 2.25 psi CGF, Tapered EnviroX 2.25 psi CGF, ISO-3, Tapered ISO-3, Vda.Therm, Tapered Vda.Therm, Vda.Therm 25 psi, Tapered Vda.Therm 25 psi, Vda.Therm AGF, Tapered Vda.Therm AGF, Vda.Therm 25 psi AGF, Tapered Vda.Therm 25 psi AGF, Tapered Vda.Therm CGF, Tapered Vda.Therm CGF, Vda.Therm 25 psi CGF, Tapered Vda.Therm 25 psi CGF

LOADMASTER SYSTEMS INC — Type Loadmaster polyisocyanurate insulation

MARTIN FIREPROOFING CORP — "Perform-A-Deck I"

RMAX, A BUSINESS UNIT OF SIKA CORPORATION — Type Multi-Max 3, Multi-Max FA-3, Ultra-Max, Ultra-Max Plus, Tapered Ultra-Max Plus, Tapered Thermaroof 3, Tapered Thermaroof FA-3, Tapered Ultra-Max.

SIKA SARNAFIL INC — Sarnatherm-R Insulation, Sarnatherm-R CG Insulation, Sarnatherm-R Tapered Insulation, Sarnatherm-R CG Tapered Insulation.

https://iq.ulprospector.com/en/profile?e=14713 3/12

3/12, 1:39 PM BKUVP753 | UL Product iQ

SOPREMA INC — Sopra ISO-L Sopra ISO-L Tapered, Sopra ISO+ L Sopra ISO+ L Tapered, Sopra ISO HI+ L, Sopra ISO HI+ L Tapered.

VERSICO INC — MMR-H, VersiCore MP-H; WeatherBond XP; MP-HF, WeatherBond XP-HF, SecurShield, WeatherBond XP9, SecurShield CD, WeatherBond XP9 CD, SecurShield HD Composite, WeatherBond XP9 HD Composite, VersiCore MP-H NH, WeatherBond XP NH, SecurShield NH, WeatherBond XP NH, VersiCore RL, SecurShield RL, Polyiso MP-HF NH.

3A. **Roofing Insulation —** Polyisocyanurate foamed plastic insulation boards, nom 48 by 48 or 96 in., to be applied on the top surface with oriented strand board or plywood. Min thickness of the polyisocyanurate core is per Item 3. No limit on max overall thickness. Boards to be installed with end joints staggered a min of 6 in. in adjacent rows. Adhesive (Item 6) may be applied between the building units and the vapor retarder (or gypsum wallboard if vapor retarder is not used).
ATLAS ROOFING CORP — ACFoam Nail Base Insulation, ACFoam Nail Base Insulation NH, Vented K, ACFoam Crosslent, ACFoam Crosslent NH, ACFoam IV Nail Base Insulation, ACFoam IV Nail Base Insulation NH, ACFoam IV Crosslent, ACFoam IV Crosslent NH.

FIRESTONE BUILDING PRODUCTS CO L L C — Halgard, "ISOGARD HCI".

SOPREMA INC — Sopra ISO CV s.

3B. **Roof Insulation-Mineral and Fiber Boards*** — (Not Shown) — Optional. Applied in one or more layers over the Foamed Plastic (Item 3) to be applied with adhesive (Item 6), asphalt or coal tar pitch (Item 7) or mechanically fastened (Item 8).
JOHNS MANVILLE - Fesco, Retro-Fit, RetroPlus, Duraboard (1/2"), Duraboard (3/4"), Duraboard (1"), Fesco HD

ROCKWOOL — Mondoboard™, Mondoboard™ Plus, "Mondoboard Plus 5", Topbock®-FOD, Topbock® -DD Plus or Topbock-DD Plus 5.

SOPREMA INC — Sopraflock P-OD and Sopraflock P-OD Plus.

3C. **Building Units*** — As an alternate to Item 3, polyisocyanurate foamed plastic insulation boards, nom 48 by 48 or 96 in., faced on the top surface with oriented strand board. Min thickness of the polyisocyanurate core shall be selected from Table in Item 3. No limit on max overall thickness. Boards to be installed with end joints staggered a min of 6 in. in adjacent rows.
HUNTER PANELLA, A DIVISION OF CARLISLE CONSTRUCTION MATERIALS, LLC — H Shield NH, H Shield HD NH

3D. **Building Units*** — As an alternate to Item 3, polyisocyanurate foamed plastic insulation boards faced on the underside (or both sides) with mineral fiber board. Min thickness of the polyisocyanurate core is 1.3 in. for the 1 hr rating without gypsum wallboard (Item 4) and for the 1-1/2 and 2 hr ratings with wallboard and 2.6 in. for the 1-1/2 hr rating without gypsum wallboard. No limit on max overall thickness. Boards to be installed with end joints staggered a min of 6 in. in adjacent rows. Adhesive (Item 6) may be applied between the building units and the vapor retarder (or gypsum wallboard if vapor retarder is not used).
FIRESTONE BUILDING PRODUCTS CO L L C — "ISO 95+ Composite"

JOHNS MANVILLE — Fesco Foam.

3E. **Building Units*** — As an alternate to Item 3, polyisocyanurate foamed plastic insulation boards faced on the underside with wood fiber board. Min thickness of the polyisocyanurate core is 1.3 in. for the 1 hr rating without gypsum wallboard (Item 4) and for the 1-1/2 and 2 hr ratings with wallboard and 2.6 in. for the 1-1/2 hr ratings without gypsum wallboard. No limit on max overall thickness. Boards to be installed with end joints staggered a min of 6 in. in adjacent rows.
CARLISLE SYNTEC SYSTEMS, A DIVISION OF CARLISLE CONSTRUCTION MATERIALS, LLC — Polyiso HP-H CD, Polyiso HP-HCD NH

HUNTER PANELLA, A DIVISION OF CARLISLE CONSTRUCTION MATERIALS, LLC — H Shield CD, H Shield CD NH

VERSICO INC — MP-HRP NH, WeatherBond XP-NP NH

3H. **Building Units*** — As an alternate to Item 3, polyisocyanurate foamed plastic insulation boards, nom 48 by 48 or 96 in., faced on the top surface with gypsum fiber board. Min thickness of the polyisocyanurate core shall be selected from Table in Item 3. No limit on max overall thickness. Boards to be installed with end joints staggered a min of 6 in. in adjacent rows.
CARLISLE SYNTEC SYSTEMS, A DIVISION OF CARLISLE CONSTRUCTION MATERIALS, LLC — Polyiso HP-H Composite NH

3I. **Building Units*** — As an alternate to Item 3, polyisocyanurate foamed plastic insulation boards, nom 48 by 48 or 96 in., faced on the top surface with glass mat faced gypsum panel. Min thickness of the polyisocyanurate core shall be selected from Table in Item 3. No limit on max overall thickness. Boards to be installed with end joints staggered a min of 6 in. in adjacent rows.
CARLISLE SYNTEC SYSTEMS, A DIVISION OF CARLISLE CONSTRUCTION MATERIALS, LLC — Polyiso HP-H CGD NH

HUNTER PANELLA, A DIVISION OF CARLISLE CONSTRUCTION MATERIALS, LLC — H Shield CG NH, H Shield-C CG NH

VERSICO INC — MP-HRP, MP-HRP NH, WeatherBond XP-NP NH

3J. **Building Units*** — As an alternate to Item 3, polyisocyanurate foamed plastic insulation boards, nom 48 by 48 or 96 in., faced on the top surface with gypsum fiber board. Min thickness of the polyisocyanurate core shall be selected from Table in Item 3. No limit on max overall thickness. Boards to be installed with end joints staggered a min of 6 in. in adjacent rows.
HUNTER PANELLA, A DIVISION OF CARLISLE CONSTRUCTION MATERIALS, LLC — H Shield HD, H Shield HD NH, H Shield-RP NH

3K. **Building Units*** — As an alternate to Item 3, polyisocyanurate foamed plastic insulation boards, nom 48 by 48 or 96 in., faced on the top surface with fiberglass mat faced gypsum panel. Min thickness of the polyisocyanurate core shall be selected from Table in Item 3. No limit on max overall thickness. Boards to be installed with end joints staggered a min of 6 in. in adjacent rows.
CARLISLE SYNTEC SYSTEMS, A DIVISION OF CARLISLE CONSTRUCTION MATERIALS, LLC — Polyiso HP-HCD, Polyiso HP-HCD NH

HUNTER PANELLA, A DIVISION OF CARLISLE CONSTRUCTION MATERIALS, LLC — H Shield-DD, H Shield-DD NH

VERSICO INC — MP-HDD, MP-HDD NH

4. **Gypsum Board —** (Not shown) — (Classified or Unclassified) — May be used to obtain various Restrained or Unrestrained Assembly Ratings as described in Item 10. Supplied in sheets nom 4 by 8 or 12 ft by 5/8 in. thick. Min weight 2.2 pcf. Applied perpendicular to steel roof deck direction with end joints staggered 2 ft in adjacent rows. End joints to occur over crests of steel roof units.
CAROT MANUFACTURING LU (View Classification)

AMERICAN GYPSUM CO (View Classification)

BEIJING NEW BUILDING MATERIALS PUBLIC LTD CO (View Classification)

CERTAINTEED GYPSUM INC (View Classification)

CGC INC (View Classification)

CERTAINTEED GYPSUM INC (View Classification)

3/12, 1:39 PM BKUVP753 | UL Product iQ

GEORGIA-PACIFIC GYPSUM L L C (View Classification)

LOADMASTER SYSTEMS INC (View Classification)

NATIONAL GYPSUM CO (View Classification)

PABCO BUILDING PRODUCTS L L C, d/b/a PABCO GYPSUM (View Classification)

PANEL REY S A (View Classification)

SIAM GYPSUM INDUSTRY (LARABURI) CO LTD (View Classification)

THAI GYPSUM PRODUCTS PCL (View Classification)

UNITED STATES GYPSUM CO (View Classification)

USG MEXICO S A DE C V (View Classification)

5. **Vapor Retarder — Sheathing Material**** — (Optional) — (Not shown) — Vinyl film or paper scrim vapor barrier, applied to steel roof deck or gypsum wallboard with adhesive (Item 6), hot asphalt (Item 7) or laid loosely, overlapped approx 2 in. on adjacent sheets. See **Sheathing Material** (QHZ) category for names of manufacturers.

5A. **Sheathing Material*** — (Optional) — In lieu of Item 5, a self-adhered rubberized asphalt roofing underlayment membrane which may be placed on top of steel roof deck, gypsum wallboard or on the roof insulation.
GCP APPLIED TECHNOLOGIES INC — Grace Ice and Water Shield, Grace Ice and Water Shield HT-P, Grace Select, Grace Ultra, and Grace Basis.

6. **Adhesive* — (Optional) —** The vapor retarder, the gypsum wallboard or the first layer of roof insulation may be secured with adhesive to the steel roof surfaces. Also used to attach the vapor retarder to gypsum wallboard, the first layer of insulation to vapor retarder or gypsum wallboard and each additional layer of insulation. Applied in 1/2 in. wide ribbons 6 in. OC at 0.4 gal/100 sq ft. See **Adhesives** (BYWR) category for names of manufacturers.

6A. **Adhesive* - (Optional) —** (Bearing the UL Classification Marking for Roof Systems (TGFU)) - When FAST 100 adhesive is used, the Unrestrained Assembly Ratings are limited to 1, 1-1/2 and 2 hr. The vapor retarder, the gypsum wallboard or the first layer of roof insulation may be secured with adhesive to the steel roof surfaces. Also used to attach the vapor retarder to gypsum wallboard, the first layer of insulation to vapor retarder or gypsum wallboard and each additional layer of insulation. Applied at a max rate of 19.8 g/ft^2. When FAST 100 adhesive is used, additional **Spray-Applied Fire Resistance Materials* (CHPO)** is required on the deck for the 1-1/2 and 2 hr Unrestrained Assembly Ratings. The thickness specified for the deck shall be increased by 1/16 in. for 1-1/2 hr Unrestrained Assembly Rating and 1/4 in. for 2 hr Unrestrained Assembly Rating.
CARLISLE SYNTEC SYSTEMS, A DIVISION OF CARLISLE CONSTRUCTION MATERIALS, LLC — FAST 100

7. **Asphalt or Coal Tar Pitch**** — (Optional) — (Not shown) — The vapor retarder, the gypsum wallboard of the first layer of roof insulation may be secured with asphalt or coal tar pitch to the steel roof surfaces at a max rate of 15 lb/100 sq ft. Also used to attach the vapor retarder to gypsum wallboard, the first layer of insulation to vapor retarder or gypsum wallboard and each additional layer of roof insulation, applied at a max rate of 25 lb/100 sq ft.

8. **Mechanical Fasteners —(Optional)—** (Not shown) — Mechanical screw-type fastener with metal or plastic washer designed for the purpose may be used to attach one or more layers of insulation to steel roof deck.

9. **Steel Roof Deck —**(Unclassified) — Min 1.5 in. deep, min 28 in. wide galv fluted steel deck. Min gauge is No. 22 MSG. Ends overlapped at supports a min 1-1/2 in. and welded to supports 12 in. OC and at side laps. Side laps fastened with 1/2 in. long hex head, self-drilling, self-tapping steel screws spaced a max of 36 in. OC. **Classified Steel Floor and Form Units*** — Noncomposite 1-1/2 to 3 in. deep, 24 to 36 in. wide, min 22 MSG galvanized steel fluted units. Ends overlapped at supports a min 1-1/2 in. and welded to supports 12 in. OC and at side laps. Side laps fastened with 3/4 in. long No. 12 self-drilling, self-tapping steel screws at 36 in. OC. As alternate to screw fasteners adjacent units may be button-punched or welded together 36 in. OC along side joints.

ASC STEEL DECK, DIV OF ASC PROFILES L L C — Types BH-36, BHN-36, BHN-35-1/4, DGB-36, B-36, BN-36, BN-35-1/4, NH-32, NHN-32, DGN-32, N-32 and NN-32. All units may be galvanized or Prime Shield*. Non-cellular decks may be vented designated with a "V" suffix to the product name.

https://iq.ulprospector.com/en/profile?e=14713 7/12

3/12, 1:39 PM BKUVP753 | UL Product iQ

BASF CORP — Types P-3450, P-3615, P-2436, and P-2404 noncompressible; 36 in. wide Types 1.5B, 1.5B;

CANAM STEEL CORP — Types B, F, N. Units may be phos,(zd or pd/zd/d.

NEW MILLENNIUM BUILDING STEEL L L C — Types B, BD; BI, F, FD, N, ND, NW32 and NW32I. - Units may be phos/painted, pd/pd/d, or galvanized. Painted units may be used for ratings up to 2 h.

VERCO DECKING INC - A McJOR CO — Types PLB, HSB, PLN and N; or Types PLN3, H3N3. Phos/pd units may be used for ratings up to 2 h.

VULCRAFT, DIV OF NUCOR CORP — Types BHF, F, High Strength B, High Strength BN; N, pd/zd/d units may be used for ratings up to 2 h.

VULCRAFT, DIV OF NUCOR CORP — Gafv Types 1.5B, 1.5BI, 1.5PLB, 1.5F, 3N, 3N6, 3.0PLN; 3N1, 3J2, 3N-32, 3PLN-32, pd/zd/d units may be used for ratings up to 2 h.

Note: Type 2-106 Spray-Applied Fire Resistive Materials to be used with galv steel roof units only.

10. **Spray-Applied Resistive Material*** — Applied by mixing with water and spraying in more than one coat to final thicknesses as shown in the illustration above and in the table below to steel surfaces which must be clean and free of dirt, loose scale and oil. When Types NH, 6/4NT, MK-6/HY Extended Set, ML-10 HB, ML-10 HB Extended Set, MK-6/HB, MK-6L, MK-6 GP, MK-6 GP Extended Set, MK-1000/HB, MK-1000/HB Extended Set and Z-106/G are used: steel deck surface must be "spatter" coated with Type SK-3 Spray-Applied Fire Resistive Materials prior to application of spray-applied resistive material. Type SK-3 Spray-applied resistive material applied in accordance with the manufacturer's application instructions. When steel deck is used the area between the steel deck and the beams top flange shall be filled. When Types Z-146, Z-146T, Z-156, Z-156T and Z-156PC are applied to steel deck, installation of expanded metal lath is required per Item 1B. Min average and min individual density of 15/14 psf respectively for Types MK-6/HY, MK-6/HY Extended Set, MK-10 HB, ML-10 HB Extended Set, MK-6/HB, MK-6L, MK-6 GP, MK-6 GP Extended Set, MK-1000/HB, MK-1000/HB Extended Set. Min avg and min ind density of 22/19 psf respectively for Types Z-106, Z-106/G, Z-106/HY. Min avg and min ind density of 40/36 psf respectively for Types Z-146, Z-146PC and Z-146T. Min avg and min ind density of 50/45 psf respectively for Types Z-156, Z-156T and Z-156PC. For method of density determination, see Design Information Section. Thickness of the spatter coat is included in the total final thickness of the protection material.

Restrained Assembly Rating Hr	Unrestrained Assembly Rating Hr	Unrestrained Beam Rating Hr	Steel deck thickness # with Gypsum Wallboard	Without Gypsum Wallboard	Beam Thickness (in) W8x28 Beam
1	0@	1	N/A	1	5/8
1	1	1	9/16 ***	1	5/8
1	1	1	5/8	1	5/8
1	1	1	1 *	1-5/8 *	5/8
1 1/2	1	1	3/4	1 1/4	9/16
1 1/2	1 1/2	1 1/2	15/16	1 3/8	11/16
1 1/2	1 1/2	1 1/2	1 1/2 *	2 1/8 *	11/16
2	1	1	1	1 1/2	7/8
2	1 1/2	1 1/2	1	1 1/2	7/8
2	2	2	1 1/8	1 11/16	1
2	2	2	2 *	2 5/8 *	1

3/12, 1:39 PM BKUVP753 | UL Product iQ

3	1 1/2	1 1/2	1 1/2	2 1/8	1 1/2
3	2	2	1 1/2	2 1/8	1 1/2
3	3	3	1 5/8	2 3/8	1 5/8

The required minimum thickness of Spray-Applied Fire Resistive Materials on the steel deck is increased by 1/16 inch for 1-1/2 hr Un-restrained assembly rating and 1/4 inch for 2 hr Unrestrained Assembly rating when beam W4 is used.

When the thickness required to the lower flange edges is reduced by one half, the 1/2 flange thickness is applicable.

* No minimum insulation thickness required.

***Minimum insulation thickness then 3/ 2 inches.

@ When the maximum clear span of the steel decking is 5 ft. 2 in. or less, the Unrestrained Assembly Rating is 1- hour.

Restrained Assembly Rating Hr	Unrestrained Assembly Rating Hr	Unrestrained Beam Rating Hr	Joist thickness (in) 50K1 more than 4 ft OC	Joist thickness (in) 10K1 less than 4 ft OC
1	0@	1	1 1/8	1
1	1	1	1 1/8	1
1 1/2	1	1	1 5/8	1 7/16
1 1/2	1 1/2	1 1/2	1 5/8	1 7/16
2	1	1	2 3/16	1 7/8
2	1 1/2	1 1/2	2 3/16	1 7/8
2	2	2	2 3/16	1 7/8
3	1 1/2	1 1/2	3 1/4	2 13/16
3	2	2	3 1/4	2 13/16
3	3	3	3 1/4	2 13/16

@ When the maximum clear span of the steel decking is 5 ft. 2 in. or less, the Unrestrained Assembly Rating is 1- hour.

ARABIAN VERMICULITE INDUSTRIES — Types MK-6/HY, MK-6/HY Extended Set, MK-10 HB, MK-10 HB Extended Set, MK-6/HB, MK-6L, MK-6 GP, MK-6 GP Extended Set, MK-1000/HB, MK-1000/HB Extended Set, SK-1, Types Z-106, Z-106/G, Z-106/HY and Type Z-146 (investigated for exterior use).

GCP KOREA INC — Types MK-6/HY, MK-6/HY Extended Set, MK-6/HB, MK-6L, MK-6 GP, MK-6 GP Extended Set, MK-10 HB, MK-10 HB Extended Set, MK-1000/HB, MK-1000/HB Extended Set, SK-1, Types Z-106, Z-106/G, Z-106/HY and Type Z-146 (investigated for exterior use).

GCP APPLIED TECHNOLOGIES INC — Types MK-6/HY, MK-6/HY Extended Set, MK-6/HB, MK-6L, MK-6 GP, MK-6 GP Extended Set, MK-10 HB, MK-10 HB Extended Set, MK-1000/HB, MK-1000/HB Extended Set, RG, SK-1, Types Z-106, Z-106/G, Z106/HY, Z-146, Z-146T, Z146PC, Z-156, Z-156T and Z-156PC. Type Z-146, Z-146T, Z146PC, Z-156, Z-156T and Z-156PC investigated for exterior use.

10A. **Alternate Spray-Applied Fire Resistive Materials*** — Applied by mixing with water and spraying in one or more coats to final thicknesses as shown in the table below to steel beam surfaces which must be clean and free of dirt, loose scale and oil. When Type Z-

https://iq.ulprospector.com/en/profile?e=14713 9/12

3/12, 1:39 PM BKUVP753 | UL Product iQ

106/G is used, the steel deck surface must be "spatter" coated with Type SK-3 Spray-Applied Fire Resistive Materials prior to application of spray-applied resistive material. Type SK-3 spray-applied resistive material applied in accordance with the manufacturer's application instructions. When steel deck is used the area between the steel deck and the beams top flange shall be filled. Min avg and min ind density of 22/19 pcf, respectively. For method of density determination, refer to Design Information Section.

10B. **Alternate Spray-Applied Fire Resistive Materials*** — Applied by mixing with water and spraying in one or more coats to final thicknesses as shown in the table below to steel beam surfaces which must be clean and free of dirt, loose scale and oil. When steel deck is used, the area between the steel deck and the beams top flange shall be filled. Application to steel roof deck requires the installation of expanded metal lath. See Item 11A. Min avg and min ind density of 40/36 pcf respectively for Types Z-146, Z-146PC and Z-146T cementitious mixes. Min avg and min ind density of 50/45 pcf respectively for Types Z-156, Z-156T and Z-156PC. For method of density determination, refer to Design Information Section.

11. **Nonmetallic Fabric Mesh —** (Optional) — As an alternate to the optional use of metal lath, glass fiber fabric mesh, weighing approx 2.5 oz/sq yd, polypropylene fabric mesh, weighing approx 1.25 oz/sq yd or equivalent, may be used to facilitate the spray application. The mesh is secured to one side of each joist with the weaver mesh. The method of attaching the mesh must be sufficient to hold the mesh and the spray applied Spray-Applied Fire Resistive Materials material in place during application until it has cured. An acceptable method to attach the mesh is by embedding the mesh in min 1/4 in. long beads of hot melted glue. The beads of glue shall be spaced a max of 12 in. OC along the top chord of the bar joist. Another method to secure the mesh is by 1-1/4 in. long by 1/2 in. wide hairpin clips formed from No. 18 SWG or heavier steel wire.

The method of attaching the mesh must be sufficient to hold the mesh and the spray applied Spray-Applied Fire Resistive Materials material in place during application until it has cured. An acceptable method to attach the mesh is by embedding the mesh in min 1/4 in. long beads of hot melted glue. The beads of glue shall be spaced a max of 12 in. OC along the top chord of the bar joist. Another method to secure the mesh is by 1-1/4 in. long by 1/2 in. wide hairpin clips formed from No. 18 SWG or heavier steel wire.

11A. **Metal Lath —** (Not Shown) — (Required with Item 10B, otherwise optional) — Metal lath shall be 3/8 in. expanded diamond mesh, weighing 2.5 lb per sq yd. Secured to underside of joists with No. 12 by 2 in. gal head self-drilling, self-tapping screws and steel washers with an outside diam of 1/2 in. screws spaced 12 in. OC in both directions with lath edges overlapped approx 3 in.

11B. **Metal Lath —** (Not Shown) — (Required on both sides of joists with Z-146, Z-146T, Z146PC, Z-156, Z-156T and Z-156PC, otherwise optional) — Metal lath may be used to facilitate the spray application of Spray-Applied Fire Resistive Materials on steel bar joists and trusses. The diamond mesh, 3/8 in. expanded steel lath, 1.7 to 3.4 lb/sq yd is secured to one side of each steel joist with No. 18 SWG galv steel wire at joist web and bottom chord members spaced 15 in. OC max. When used, the metal lath is to be fully covered with Spray-Applied Fire Resistive Materials with no min thickness requirements.

12. **Sprayed Fiber*** — (Optional, Not Shown) Sprayed Fiber, Classified for Surface Burning Characteristics (BNST), having a maximum applied density of 2.5 pcf applied over Spray-Applied Fire Resistive Material (Item 10 through 10B), or Steel Deck or Steel Floor and Form Units (Item 9) and Beams (Item 1) in accordance with the following tables:

Allowable Sprayed Fiber Thickness over SFRM applied to Steel Roof Deck or Steel Floor and Form Units (Item 9)

Installed SFRM Thickness (in.) on Joist	SFRM Density (lb/ft^3) 15	22	40	50
	Sprayed Fiber Thickness (in.)			
9/16	8	8	8	8
5/8	8	8	8	8
3/4	8	8	8	8
13/16	7-3/4	8	8	8
1	6-15/16	8	8	8
1-1/16	6-11/16	8	8	8

https://iq.ulprospector.com/en/profile?e=14713 10/12

3/12, 1:39 PM BKUVP753 | UL Product iQ

Installed SFRM Thickness (in.) on Joist	SFRM Density (lb/ft^3) 15	22	40	50
	Sprayed Fiber Thickness (in.)			
1	8	8	8	8
1 1/8	8	8	8	8
1 3/16	7 3/4	8	8	8
1 1/4	7 7/16	8	8	8
1 5/16	7 1/8	8	8	8
1 3/8	6 13/16	8	8	8
1 7/16	6 9/16	8	8	8
1 1/2	6 5/16	8	8	8
1 9/16	6 1/16	8	7 7/8	8

Allowable Sprayed Fiber Thickness over SFRM applied to Joists (Item 1)

Installed SFRM Thickness (in.) on Joist	SFRM Density (lb/ft^3) 15	22	40	50
	Sprayed Fiber Thickness (in.)			
1	8	8	8	8
1 1/8	8	8	8	8
1 1/16	7 3/4	8	8	8
1 1/4	7 1/2	8	8	8
1 5/16	7 1/4	8	8	8
1 3/8	7 1/16	8	8	8
1 7/16	6 13/16	8	8	8
1 1/2	6 9/16	8	8	8
1 9/16	6 5/16	8	8	8
1 5/8	6 1/16	8	7 7/8	8
1 11/16	5 13/16	8	7 3/16	8
1 3/4	5 5/8	8	7 1/8	8
1 13/16	5 3/8	8	6 13/16	8
1 7/8	5 1/8	8	6 1/2	8
1 15/16	4 15/16	8	6 1/16	8
2	4 11/16	8	5 11/16	8
2 1/16	4 1/16	8	5 1/4	8
2 1/8	3 1/2	8	4 7/8	8
2 3/16	2 15/16	8	4 1/2	8
2 1/4	2 1/8	8	3 7/8	8
2 5/16	1 1/16	8	3 1/8	8
2 3/8	0	8	0	8

Allowable Sprayed Fiber Thickness over SFRM applied to Beams (Item 1)

Installed SFRM Thickness (in.) on Joist	SFRM Density (lb/ft^3) 15	22	40	50
	Sprayed Fiber Thickness (in.)			
5/8	8	8	8	8
9/16	8	8	8	8
5/8	8	8	8	8
11/16	8	8	8	8
3/4	8	8	8	8
13/16	8	8	8	8
7/8	8	8	8	8
15/16	8	8	8	8
1	8	8	8	8
1 1/16	8	8	8	8
1 1/8	8	8	8	8
1 3/16	8	8	8	8
1 1/4	8	8	8	8
1 5/16	8	8	8	8
1 3/8	8	8	8	8
1 7/16	8	8	8	8
1 1/2	8	8	8	8
1 9/16	8	8	8	8
1 5/8	8	8	8	8
1 11/16	8	8	8	8
1 3/4	8	8	8	8
1 13/16	8	8	8	8
1 7/8	8	8	8	8
1 15/16	8	8	8	8
2	8	8	8	8
2 1/16	8	8	8	8
2 1/8	8	8	8	8
2 3/16	8	8	8	8
2 1/4	8	8	8	8
2 5/16	8	8	8	8
2 3/8	8	8	8	8

https://iq.ulprospector.com/en/profile?e=14713 11/12

3/12, 1:39 PM BKUVP753 | UL Product iQ

Installed SFRM Thickness (in.) on Joist	SFRM Density (lb/ft^3) 15	22	40	50
	Sprayed Fiber Thickness (in.)			
1	8	8	8	8
1 1/8	8	8	8	8
1 1/16	7 1/2	8	8	8
1 1/4	7 1/16	8	8	8
1 5/16	6 15/16	8	8	8
1 3/8	6 7/8	8	8	8
1 7/16	6 3/16	8	8	8
1 1/2	5 11/16	8	8	8
1 9/16	5 1/4	8	8	8
1 5/8	4 7/8	8	8	8
1 11/16	4 1/2	8	8	8
1 3/4	3 7/8	8	8	8
1 13/16	3 1/8	8	8	8
1 7/8	0	8	0	8

**INTERNATIONAL CELLULOS

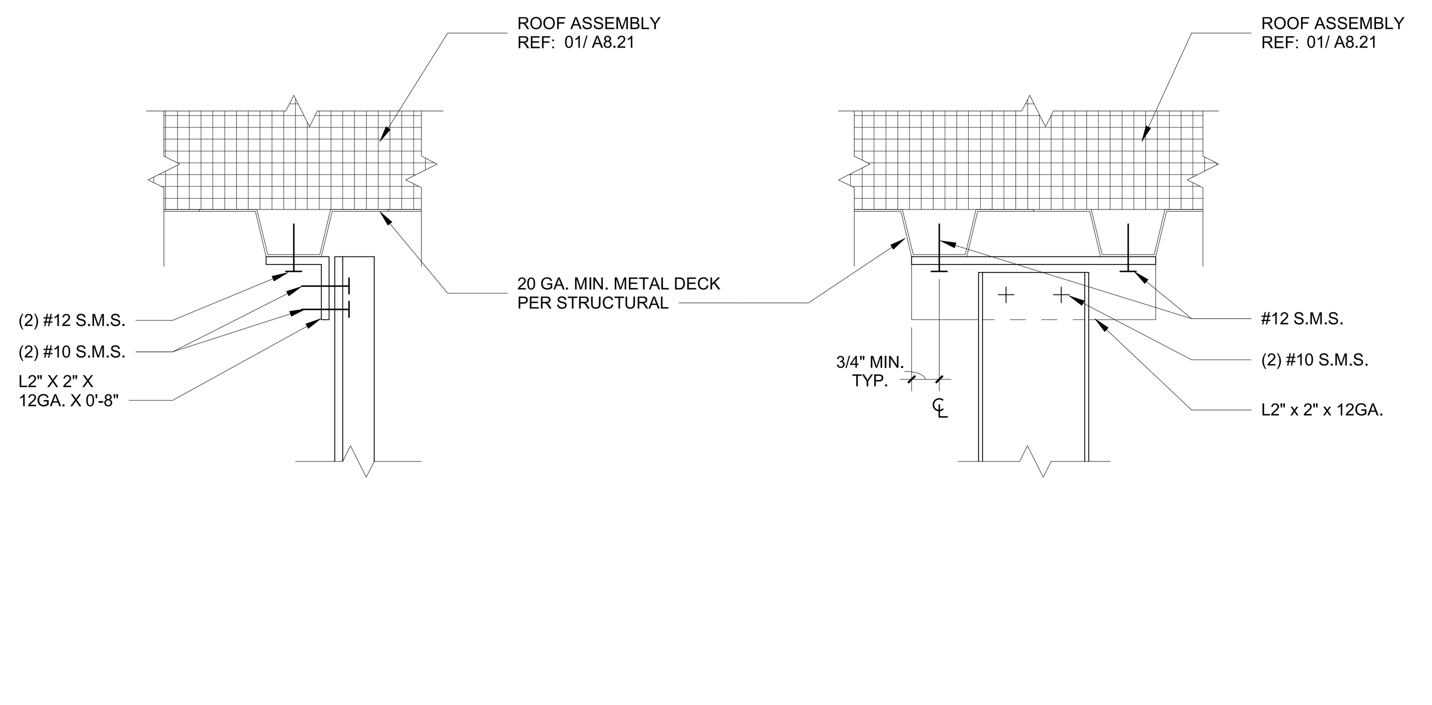

CHANNEL STRUT ATTACHMENT DETAIL AT METAL DECK 3" = 1'-0" 20

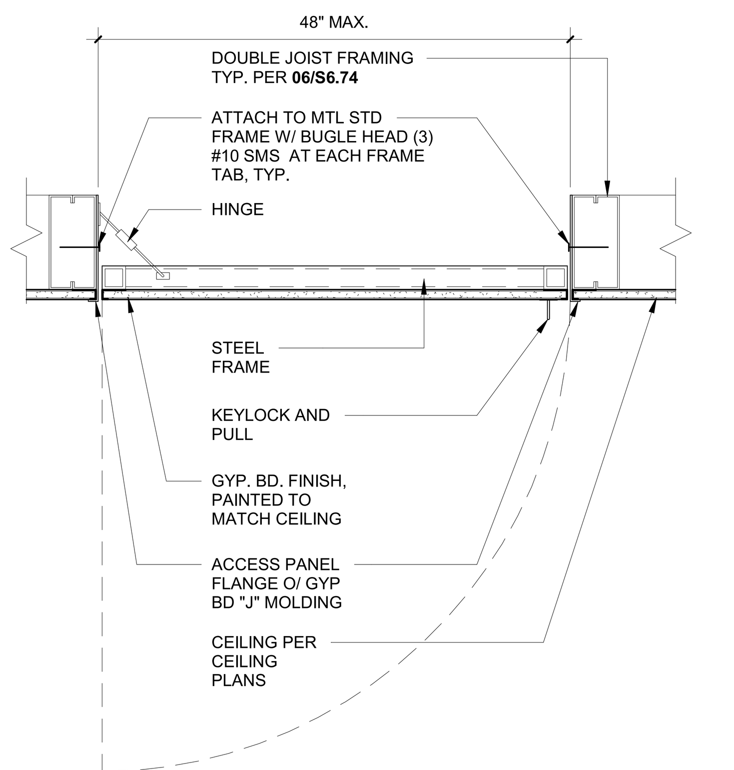

HORIZONTAL ACCESS PANEL 1 1/2" = 1'-0" 16

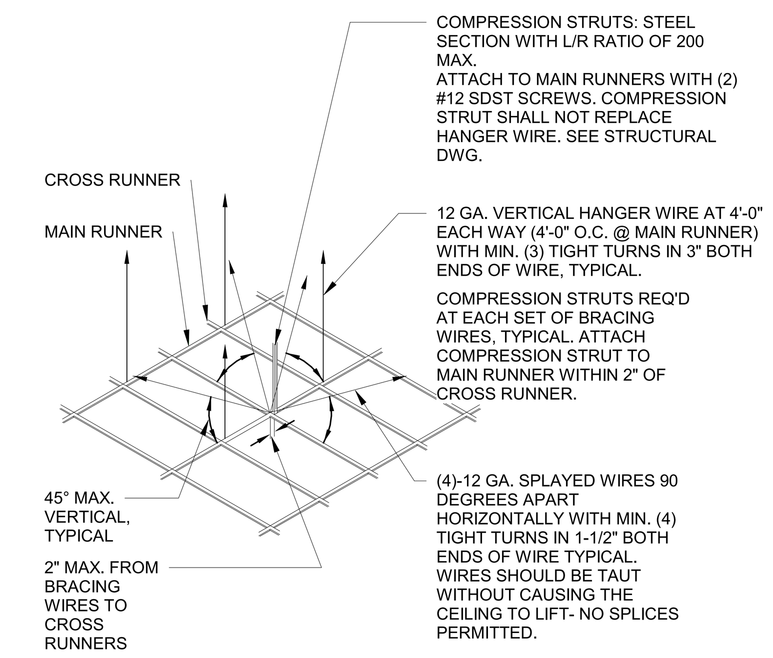

NOTE:

1. FOR CONNECTIONS OF HANGER WIRES @ BARE MTL DECK, SEE 13 A9.21

SPLAY BRACING DETAIL 08

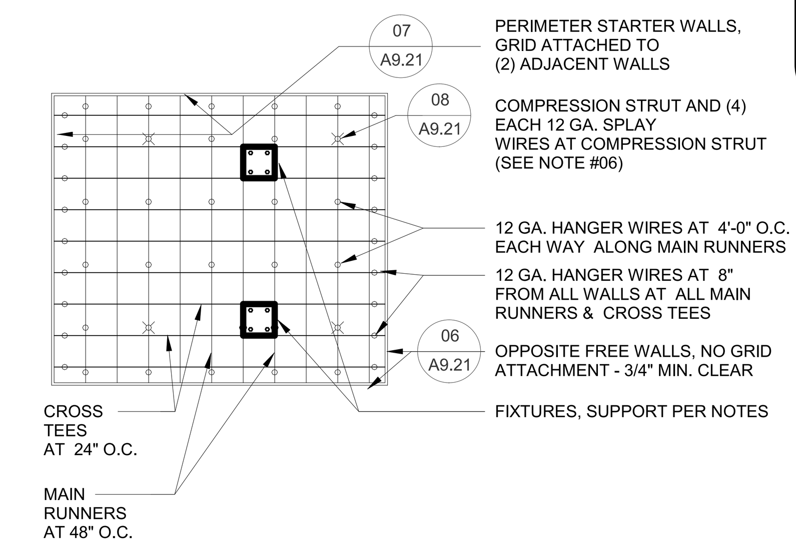

NOTES:

1. THESE PLANS AND SPECIFICATIONS ARE FOR FLAT AND LEVEL CEILING SYSTEMS, WHOSE TOTAL WEIGHT INCLUDING CEILING MOUNTED AIR TERMINALS, SERVICES AND LIGHT FIXTURES DO NOT EXCEED FOUR (4) P.S.F. HEAVIER SYSTEMS, SYSTEMS THAT ARE NOT FLAT AND LEVEL, AND THOSE SUPPORTING LATERAL LOADS FROM PARTITIONS WILL REQUIRE SPECIAL DESIGN DETAILS.
2. SPLICES WILL NOT BE PERMITTED IN ANY HANGER WIRES.
3. CEILING PANELS SHALL NOT SUPPORT ANY LIGHT FIXTURES, AIR TERMINALS OR DEVICES.
4. PROVIDE TRAPEZE OR OTHER SUPPLEMENTARY SUPPORT MEMBERS AT OBSTRUCTION TO MAINTAIN HANGER SPACING. PROVIDE ADDITIONAL HANGERS, STRUTS OR BRACES AS REQUIRED AT ALL CEILING BREAKS, SOFFITS OR DISCONTINUOUS AREAS. HANGER WIRES THAT ARE MORE THAN 1 IN 6 OUT OF PLUMB SHALL HAVE COUNTER-SLOPING WIRES.
5. MAIN RUNNERS, CROSS RUNNERS, SPLICES, EXPANSION DEVICES, AND INTERSECTION CONNECTORS SHALL BE DESIGNED TO CARRY A MEAN ULTIMATE TEST LOAD OF NOT LESS THAN 180 LBS IN COMPRESSION AND TENSION.
6. PROVIDE COMPRESSION STRUT WITH SETS OF FOUR (4) 12 GA. SPLAYED BRACING WIRES ORIENTED 90 DEGREES FROM EACH OTHER AT THE FOLLOWING SPACING:
   - A: PLACE SETS OF COMPRESSION STRUT & BRACING WIRES NOT MORE THAN 12'x12' O.C.
   - B: PROVIDE COMPORESSION STRUT & BRACING WIRES AT LOCATIONS NOT MORE THAN 1/2 THE SPACING GIVEN IN 'A' ABOVE FROM EACH PERIMETER WALL AND AT THE EDGE OF VERTICAL CEILING OFFSETS.
7. FASTEN HANGER WIRES WITH NOT LESS THAN THREE (3) TIGHT TURNS. FASTEN BRACING WIRES WITH FOUR (4) TIGHT TURNS IN 1 1/2". HANGER OR BRACING WIRE ANCHORED TO THE STRUCTURE SHALL BE INSTALLED IN SUCH A MANNER THAT THE DIRECTION OF THE WIRE ALIGNS AS CLOSELY AS POSSIBLE WITH THE DIRECTION OF THE FORCES ACTING ON THE WIRE.
8. SEPARATE ALL CEILING HANGER AND BRACING WIRES AT LEAST SIX (6) INCHES FROM ALL UNBRACED DUCTS, PIPES. CONDUIT, ETC. IT IS ACCEPTABLE TO ATTACH LIGHTWEIGHT ITEMS, SUCH AS STROBE LIGHTS, OCCUPANCY SENSORS, SPEAKERS, EXIT SIGNS, ETC. SHALL BE ATTACHED TO THE CEILING GRID. ALL FIXTURES, TERMINALS AND OTHER DEVICES SHALL BE MOUNTED IN A MANNER THAT WILL NOT COMPROMISE CEILING PERFORMANCE IN ACCORDANCE WITH SECTION 13.5.6.2.2 I TEM 5 OF ASCE 7 AS AMENDED BY CBC SECTION 1616A.1.20 (1616.10.16*) AND ASTM E580 SECTIONS 5.3 AND 5.4. IN ADDITION DEVICES WEIGHING MORE THAN 10 LBS SHALL HAVE A #12 GAGE SLACK SAFETY WIRE ANCHORED TO THE STRUCTURE ABOVE. DEVICES WEIGHING MORE THAN 20 LB SHALL BE SUPPORTED I NDEPENDENTLY FROM THE CEILING AND TO THE STRUCTURE ABOVE.
9. ATTACH ALL LIGHT FIXTURES TO THE CEILING GRID RUNNERS WITH TWO (2) SCREWS TO RESIST A HORIZONTAL FORCE EQUAL TO THE WEIGHT OF THE FIXTURES. ALL LIGHT FIXTURES SHALL BE ATTACHED SECURELY TO THE GRID WITH FOUR (4) SCREWS, ONE AT EACH CORNER OF THE FIXTURE.
10. FLUSH OR RECESSED LIGHT FIXTURES AND AIR TERMINALS OR SERVICES WEIGHING LESS THAN OR EQUAL TO 20LB. SHALL HAVE ONE (1) #12 GA. SLACK SAFETY WIRE ATTACHED FROM THE TERMINAL OR SERVICE TO THE STRUCTURE ABOVE AND (2) SCREWS ATTACHING COMPONENT TO GRID TO RESIST HORIZONTAL FORCES.
11. FLUSH OR RECESSED LIGHT FIXTURES AND AIR TERMINALS OR SERVICES WEIGHING MORE THAN 20LB. BUT LESS THAN 56 POUNDS MAY BE SUPPORTED DIRECTLY ON THE RUNNERS OF A HEAVY DUTY GRID SYSTEM BUT, IN ADDITION, THEY MUST HAVE A MINIMUM OF TWO (2) 12 GA. SLACK SAFETY WIRES ATTACHED TO THE FIXTURES AT DIAGONAL CORNERS AND ANCHORED TO THE STRUCTURE ABOVE. ALL 4'x4' LIGHT FIXTURES MUST HAVE SLACK SAFETY WIRES AT EACH CORNER.
12. ALL FLUSH OR RECESSED LIGHT FIXTURES AND AIR TERMINALS OR SERVICES WEIGHING 56 POUNDS OR MORE MUST BE INDEPENDENTLY SUPPORTED BY NOT LESS THAN FOUR (4) TAUT 12 GA. WIRES EACH, ATTACHED TO THE FIXTURE AND TO THE STRUCTURE ABOVE REGARDLESS OF THE TYPE OF CEILING GRID SYSTEM USED. THE FOUR (4) TAUT 12 GA. WIRES INCLUDING THEIR ATTACHMENT TO THE STRUCTURE ABOVE MUST BE CAPABLE OF SUPPORTING FOUR (4) TIMES THE WEIGHT OF THE UNIT.
13. SUPPORT SURFACE MOUNTED LIGHT FIXTURES BY AT LEAST TWO (2) POSITIVE DEVICES WHICH SURROUND THE MAIN CEILING RUNNER AND WHICH ARE EACH SUPPORTED FROM THE STRUCTURE ABOVE BY A 12 GA. WIRE. SPRING CLIPS OR CLAMPS THAT CONNECT ONLY TO THE RUNNER ARE NOT ACCEPTABLE. PROVIDE ADDITIONAL SUPPORTS WHEN LIGHT FIXTURES ARE EIGHT (8) FEET OR LONGER.
14. SUPPORT PENDANT MOUNTED LIGHT FIXTURES DIRECTLY FROM THE STRUCTURE ABOVE WITH HANGER WIRES OR CABLES PASSING THROUGH EACH PENDANT HANGER AND CAPABLE OF SUPPORTING FOUR (4) TIMES THE WEIGHT OF THE FIXTURE. ATTACH ALL LIGHT FIXTURES TO THE CEILING GRID RUNNERS TO RESIST A HORIZONTAL FORCE EQUAL TO THE WEIGHT OF THE FIXTURES. SPECIAL DETAILS ARE NECESSARY FOR THIS CONDITION AT THE CEILING GRID.
15. EXPANSION JOINTS SHALL BE PROVIDED IN THE CEILING AT INTERSECTIONS OF CORRIDORS AND AT JUNCTIONS OF CORRIDORS AND LOBBIES OR OTHER SIMILAR AREAS.
16. FOR CEILING AREAS EXCEEDING 2,500 SQUARE FEET, A SEISMIC SEPARATION JOINT SHALL BE PROVIDED TO DIVIDE THE CEILING INTO AREAS NOT EXCEEDING 2,500 SQUARE FEET.
17. CEILING SYSTEM COMPONENTS SHALL COMPLY WITH ASTM C635-07 AND SECTION 5.1 OF ASTM E580-10A.
18. THE CEILING GRID SYSTEM MUST BE RATED HEAVY DUTY AS DEFINED BY ASTM C635-08.
19. CEILING SUSPENSION SYSTEMS. THE FOLLOWING CEILING SYSTEM IS PART OF THE SCOPE OF THIS PROJECT:

    MANUFACTURER'S CATALOG NUMBER - MAIN RUNNER : ARMSTRONG 7301
    MANUFACTURER'S CATALOG NUMBER - CROSS RUNNER : ARMSTRONG XL7328/XL7342
    EVALUATION REPORT NUMBER : ICC-ESR-1308
20. SEISMIC WALL CLIP:

    MANUFACTURER'S MODEL : BERC2; ESR 1308

CEILING REQUIREMENTS 01

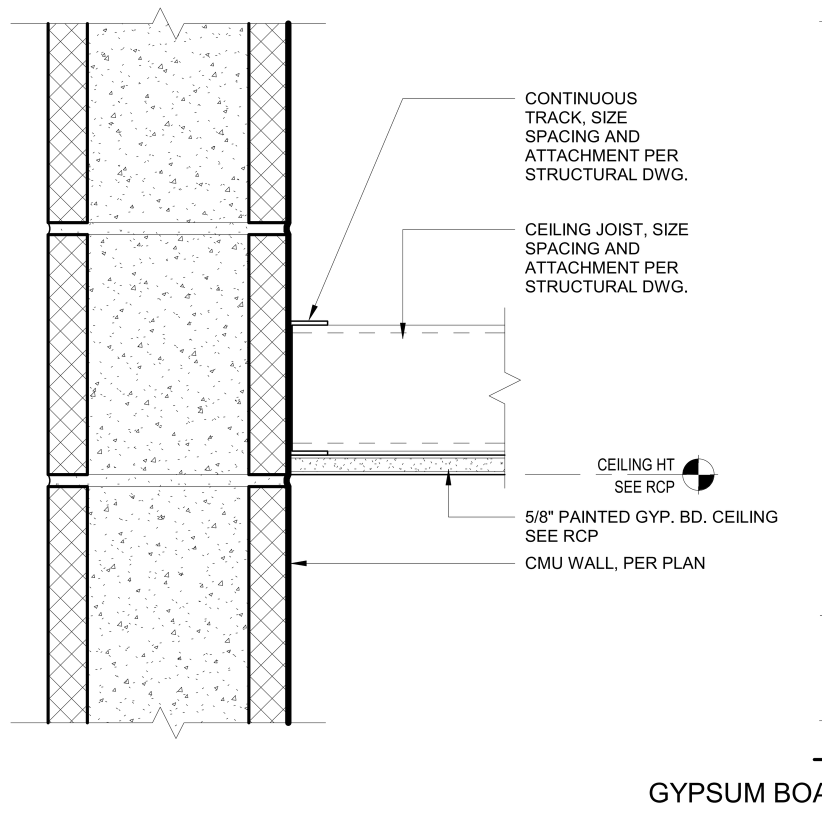

GYPSUM BOARD CEILING @ CMU WALL 3" = 1'-0" 19

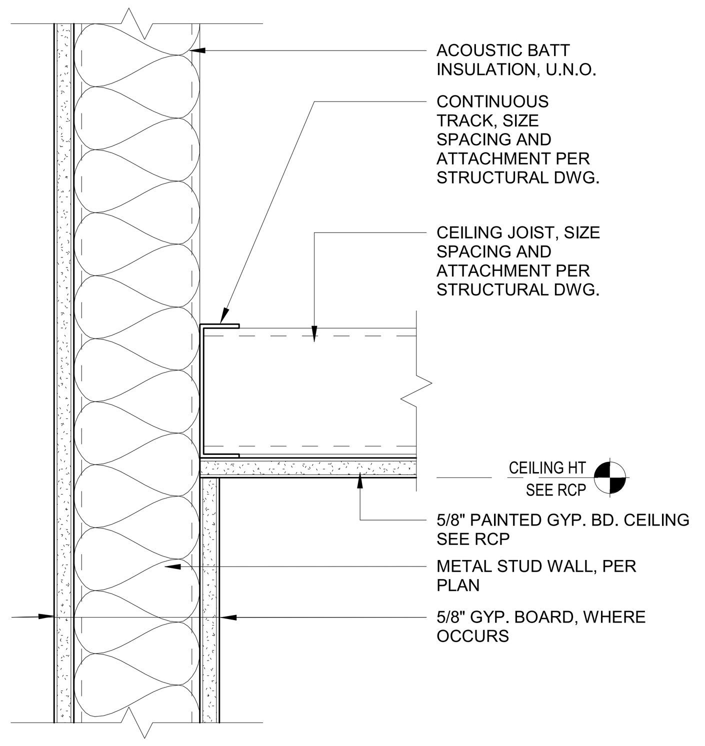

GYPSUM BOARD CEILING NON-RATED PARTITION 3" = 1'-0" 15

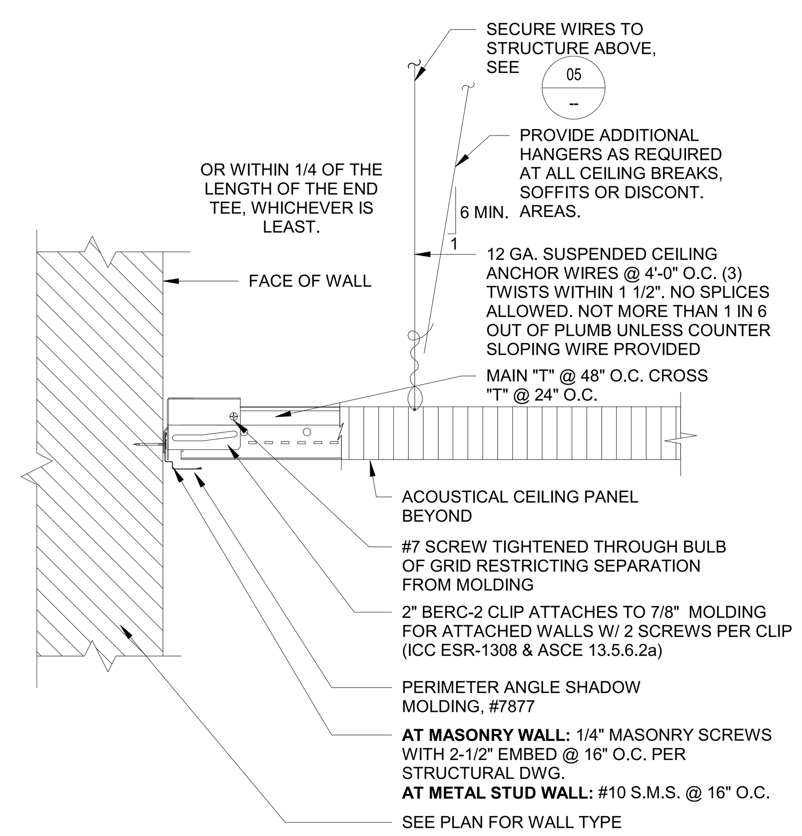

PERIMETER STARTER WALL (FIXED END) 3" = 1'-0" 07

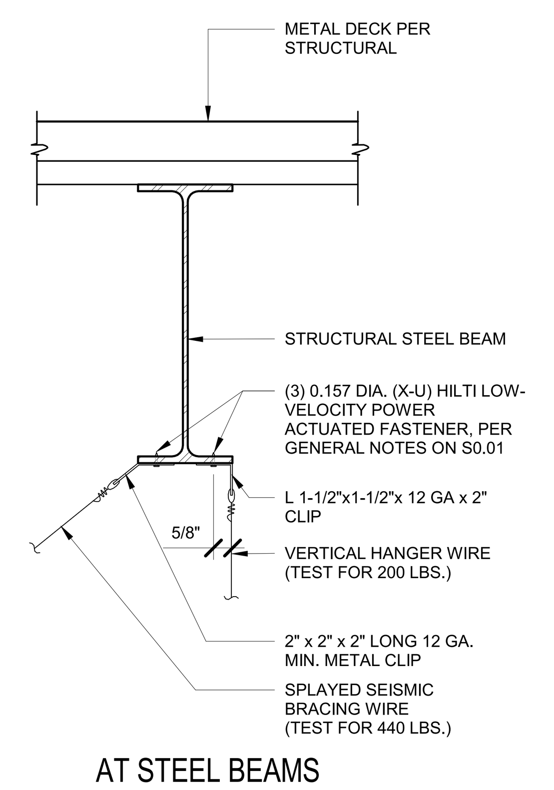

WIRE CONNECTIONS TO STEEL BEAMS 18

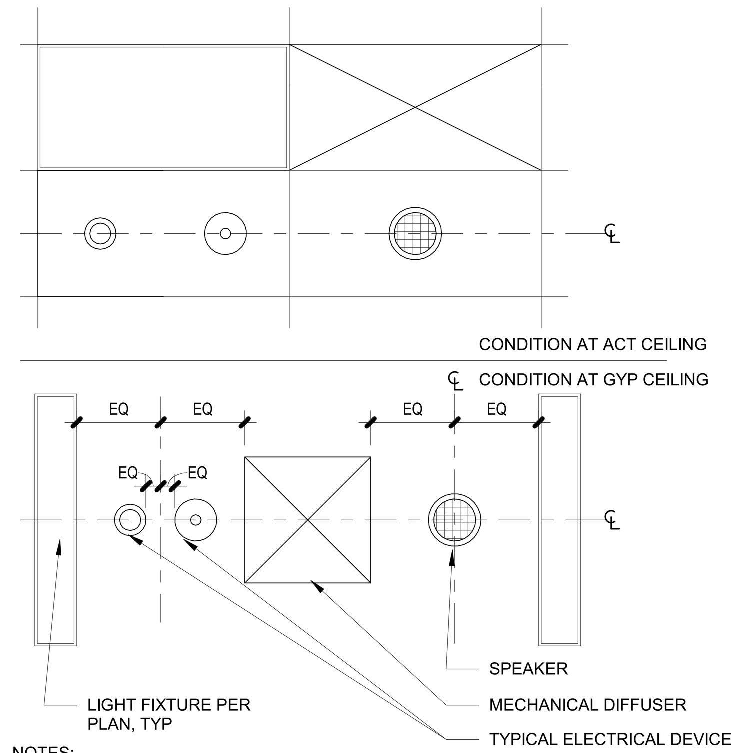

NOTES:

1. CENTER DEVICE ON LIGHT FIXTURE OR MECHANICAL DIFFUSER WHERE OCCURS.
2. IN ACT CEILINGS, CENTER DEVICES IN CEILING TILE, NO MORE THAN TWO DEVICES PER 2x4 TILE.
3. IN ACP CEILINGS, IF ONLY ONE DEVICE OCCURS, CENTER DEVICE IN TILE, BOTH DIRECTIONS.
4. WHERE MULTIPLE DEVICES OCCUR, CONSOLIDATE INTO ONE AREA WHERE POSSIBLE.

TYPICAL DEVICE LAYOUT 14

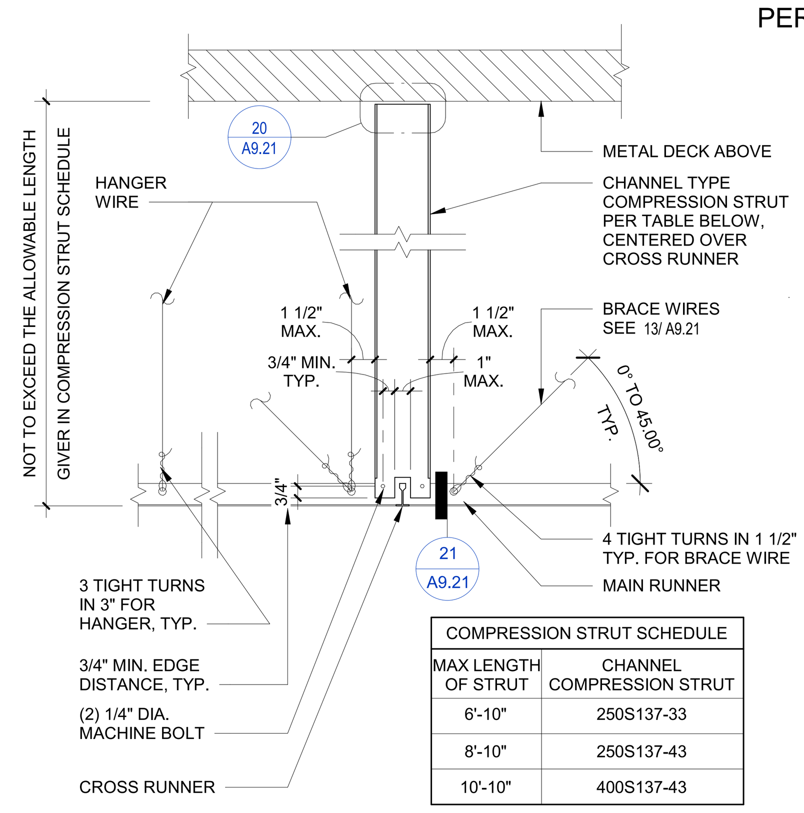

COMPRESSION STRUT SCHEDULE	
MAX LENGTH OF STRUT	CHANNEL COMPRESSION STRUT
6'-10"	250S137-33
8'-10"	250S137-43
10'-10"	400S137-43

NOTE:

1. COMPRESSION STRUTS SHALL NOT REPLACE HANGER WIRE.
2. CEILING TILE NOT SHOWN FOR CLARITY.
3. SPLAY BRACING PER 08/ A9.21

COMPRESSION STRUT @ DECK 1 1/2" = 1'-0" 10

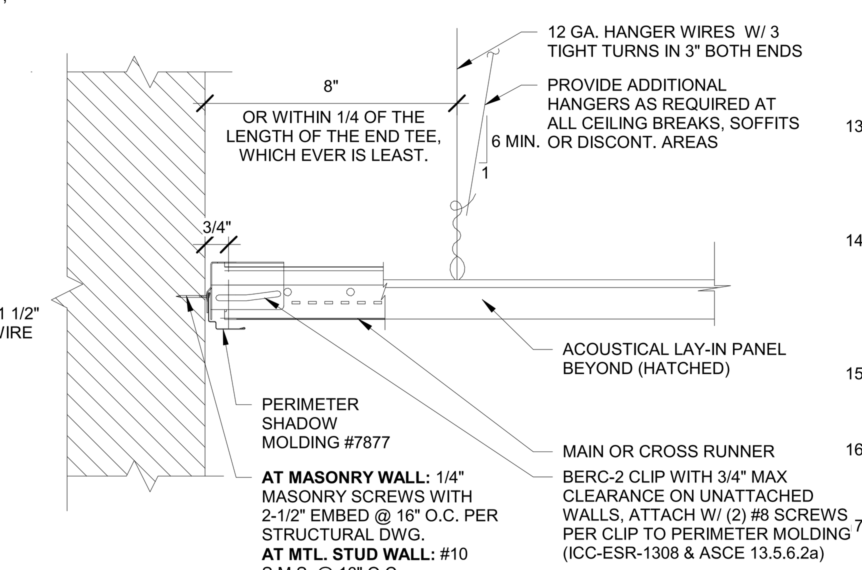

NOTES:
1. WHERE THE PERPENDICULAR DISTANCE FROM THE WALL TO THE FIRST PARALLEL RUNNER IS 8" OR LESS, THIS INTERLOCK IS NOT REQUIRED.
2. NAILS AT ENDS OF HORIZONTAL STRUTS ARE TO BE PLACED WITH NAIL HEAD TOWARD CENTER LINE OF SPAN OF STRUT.

OPP. WALL OF STARTER WALL (FREE END) 3" = 1'-0" 06

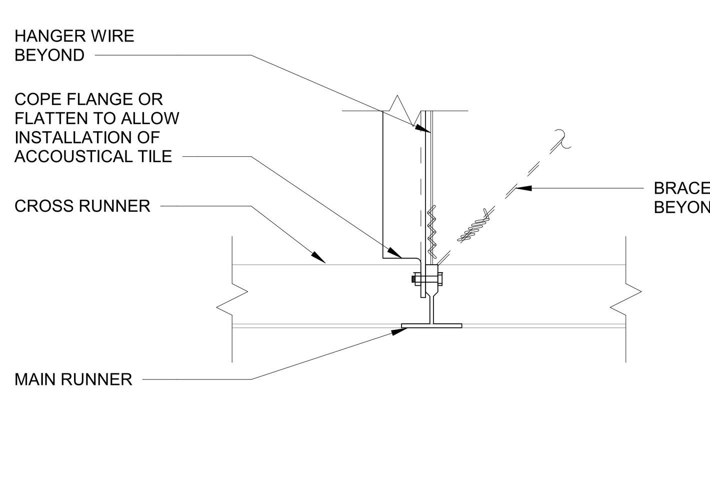

SECTION AT HANGER RUNNER 6" = 1'-0" 21

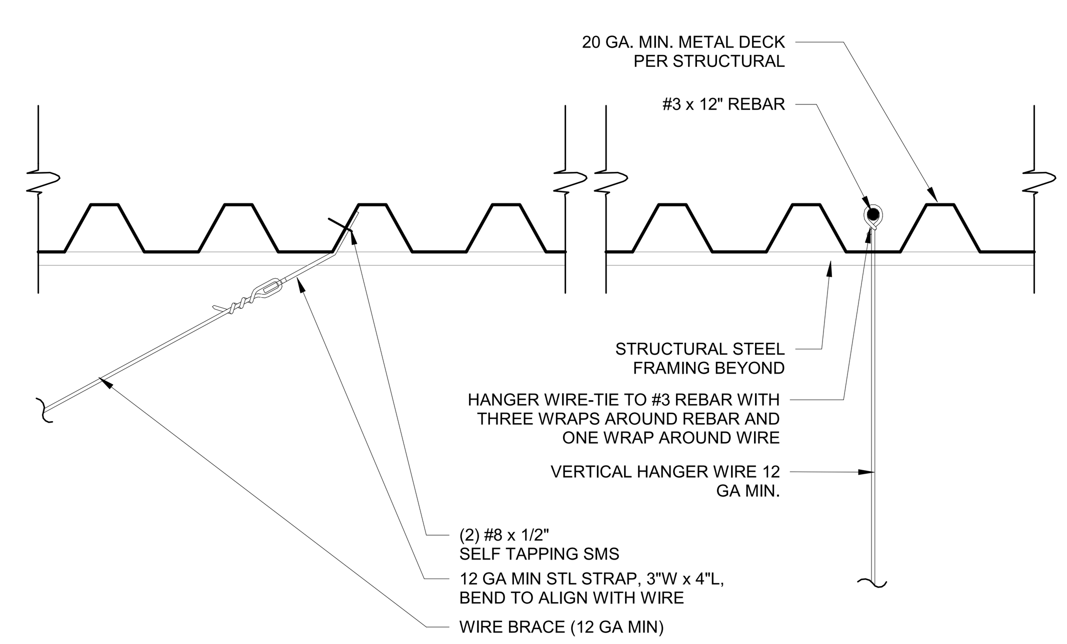

NOTE: HANGER WIRE CONNECTION TO THE STRUCTURE ABOVE SHALL BE CAPABLE OF CARRYING NOT LESS THAN A 90# ALLOWABLE LOAD WHEN TESTED PER ASTM E3090 (SEE ASTM E580 SECTION 5.2.7.2)

WIRE CONNECTION TO METAL DECK 3" = 1'-0" 13

IDENTIFICATION STAMP
DIV. OF THE STATE ARCHITECT
APP: 02-119490 INC:
REVIEWED FOR
SS ☑ FLS ☑ ACS ☑
DATE: 09/13/2022

LPA
ARCHITECTURE ENGINEERING INTERIORS LANDSCAPE ARCHITECTURE PLANNING
916-287-2400 Office
916-287-2401 Fax
LPADesignStudios.com
431 I Street,
Suite 107
Sacramento, California 95814

This document and all other project documents, ideas, aesthetics and designs incorporated therein are instruments of service. All project documents are copyright protected, are the property of LPA, Inc. (LPA) and cannot be lawfully used in whole or in part for any project or purpose except as set forth in the contractual agreement between LPA and its Client. The unauthorized disclosure and/or use of the project documents (including the creation of derivative works) may give rise to liability for copyright infringement, unlawful disclosure, use or misappropriation of property rights held by LPA. The unauthorized use of the project documents will give rise to the recovery of monetary losses and damages including attorney fees and costs for which the unauthorized user will be held liable. Project documents describe the design intent of the work and are not a representation of as-built or existing conditions. LPA is not responsible for any discrepancies between the project documents and the existing conditions.
© LPA, Inc.

LICENSED ARCHITECT C-33172 REN.06-01-23 STATE OF CALIFORNIA

DAVIS SR HIGH SCHOOL AQUATICS CENTER
315 W 14TH ST., DAVIS, CA 95616
Developed for
DAVIS JOINT UNIFIED SCHOOL DISTRICT

Submittal	Date
50% DD REVIEW	06/15/2021
100% DD SUBMITTAL	07/26/2021
50% CD REVIEW	10/08/2021
100% CD DSA SUBMITTAL	10/22/2021
DSA SUBMITTAL	03/24/2022

Revision	Date

Job Number	1904413
Date Published	03/24/2022
Checked By	Checker
Scale	As indicated

INTERIOR CEILING DETAILS

A9.21

IDENTIFICATION STAMP
DIV. OF THE STATE ARCHITECT
APP: 02-119490 INC:
REVIEWED FOR
SS ☑ FLS ☑ ACS ☑
DATE: 09/13/2022

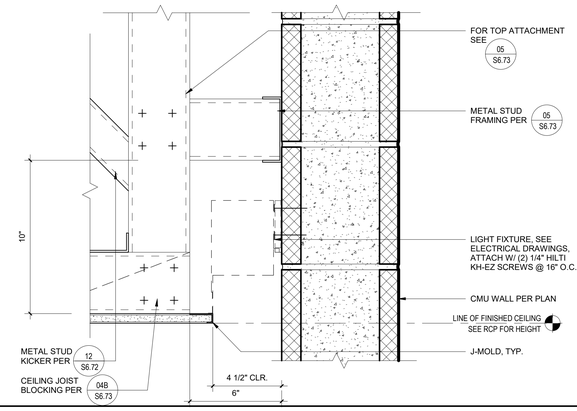

LIGHT COVE @ CMU WALL | 3" = 1'-0" | 3

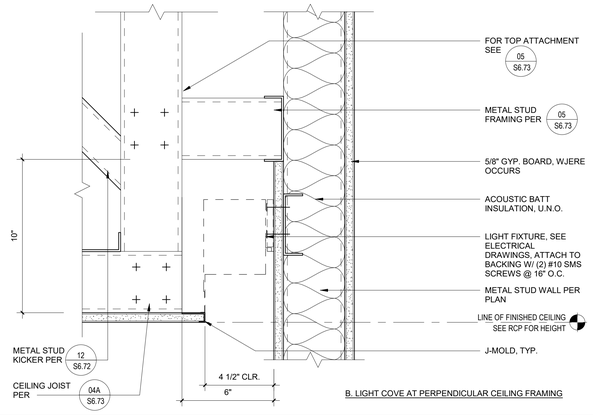

B. LIGHT COVE AT PERPENDICULAR CEILING FRAMING

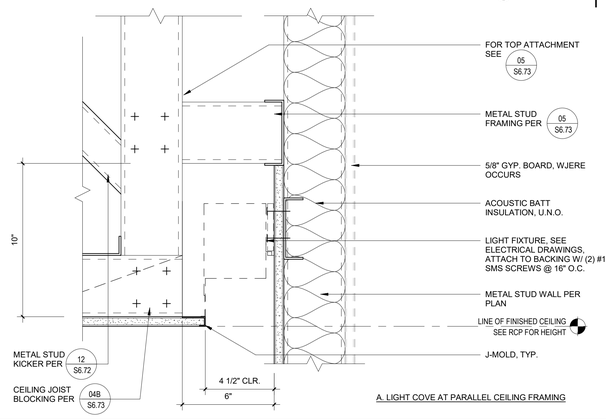

A. LIGHT COVE AT PARALLEL CEILING FRAMING

LIGHT COVE @ MTL STUD WALL | 3" = 1'-0" | 2

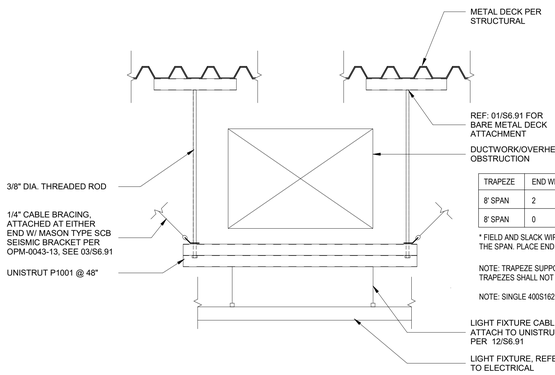

NOTE: MAX. SYSTEM DEAD LOAD = 4PSF

TRAPEZE	END WIRES	FIELD WIRES	SLACK WIRES
8' SPAN	2	1	2
8' SPAN	0	2	3

* FIELD AND SLACK WIRES CAN BE PLACED ANYWHERE WITHIN THE SPAN. PLACE END WIRES WITHIN 12" OF ENDS.

NOTE: TRAPEZE SUPPORT LIMITED TO CEILING SUPPORT SYSTEM ONLY. THESE TRAPEZES SHALL NOT BE USED TO SUPPORT LATERAL BRACE OR SPLAY WIRES.

NOTE: SINGLE 400S162-54 MAY BE USED WHERE SPAN IS LESS THAN 4'-0"

OVERHEAD OBSTRUCTION TRAPEZE DETAIL | 1 1/2" = 1'-0" | 01

LPA
ARCHITECTURE ENGINEERING INTERIORS
LANDSCAPE ARCHITECTURE PLANNING

916-287-2400 Office
916-287-2401 Fax
LPADesignStudios.com
431 I Street,
Suite 107
Sacramento, California 95814

LICENSED ARCHITECT
JAMING W. KIM
No. C-33172
SEN 05-31-23
STATE OF CALIFORNIA

This document and all other project documents, ideas, aesthetics and designs incorporated therein are instruments of service. All project documents are copyright protected, are the property of LPA, Inc. (LPA) and cannot be lawfully used in whole or in part for any project or purpose except as set forth in the contractual agreement between LPA and its Client. The unauthorized disclosure and/or use of the project documents (including the creation of derivative works), may give rise to liability for copyright infringement, unlawful disclosure, use or misappropriation of property rights held by LPA. The unauthorized use of the project documents will give rise to the recovery of monetary losses and damages including attorney fees and costs for which the unauthorized user will be held liable.
Project documents describe the design intent of the work and are not a representation of as-built or existing conditions. LPA is not responsible for any discrepancies between the project documents and the existing conditions.

© LPA, Inc.

DAVIS SR HIGH SCHOOL
AQUATICS CENTER
315 W 14TH ST., DAVIS, CA 95616

Developed for
DAVIS JOINT UNIFIED SCHOOL DISTRICT

Revision	Date

Submittal	Date
50% DD REVIEW	06/15/2021
100% DD SUBMITTAL	07/26/2021
50% CD REVIEW	10/08/2021
100% CD DSA SUBMITTAL	10/22/2021
DSA SUBMITTAL	03/24/2022

Job Number	1904413
Date Published	03/24/2022
Checked By	Checker
Scale	As indicated

INTERIOR CEILING DETAILS

A9.22

SIGNAGE SCHEDULE						
Mark	Type Mark	Sign Text Line 1	Sign Text Line 2	Mounting Location	Detail Reference	Comments
1001-01	A1	1001	POOL MECHANICAL	WALL	05/A10.11	
1001-02	D	N/A	EXIT	WALL	08/A10.11	
1001-03	A1	1001	POOL MECHANICAL	WALL	05/A10.11	
1002-01	A1	1002	CHEMICAL	WALL	05/A10.11	
1003-01	A1	1003	CHEMICAL	WALL	05/A10.11	
1004-01	C	1004	ELECTRICAL ROOM	DOOR	19/A10.11	
1005-01	A1	1005	STORAGE	WALL	05/A10.11	
1005-03	L	EMERGENCY	GAS SHUT-OFF	WALL	03/A10.12	
1006-01	B	1006	OFFICE	WALL	07/A10.11	
1007-01	F(C)	N/A	N/A	DOOR	20/A10.11	
1007-02	J	N/A	N/A	WALL	16/A10.11	
1008-01	F(C)	N/A	N/A	DOOR	13/A10.11	
1008-02	J	N/A	N/A	WALL	16/A10.11	
1009-01	F(C)	N/A	N/A	DOOR	20/A10.11	
1009-02	J	N/A	N/A	WALL	16/A10.11	
1010 -01	A1	1010	CUSTODIAL	WALL	05/A10.11	
1011-01	A1	1011	STORAGE	WALL	05/A10.11	
1011-02	L	EMERGENCY	GAS SHUT-OFF	WALL	02/A10.12	
1012-01	A2	1012	CHANGING ROOM	WALL	06/A10.11	
1013-01	F(B)	N/A	N/A	DOOR	20/A10.11	
1013-02	H	N/A	N/A	WALL	15/A10.11	
1014-01	F(A)	N/A	N/A	DOOR	20/A10.11	
1014-02	G	N/A	N/A	WALL	14/A10.11	
1015-01	A2	1015	CHANGING ROOM	WALL	06/A10.11	
1016-01	F(C)	N/A	N/A	DOOR	20/A10.11	
1016-02	J	N/A	N/A	WALL	16/A10.11	
1017-01	F(C)	N/A	N/A	DOOR	20/A10.11	
1017-02	J	N/A	N/A	WALL	16/A10.11	
1018-01	C	1011	IDF	WALL	19/A10.11	
1019	I	1019	FIRE RISER INSIDE	DOOR	18/A10.11	

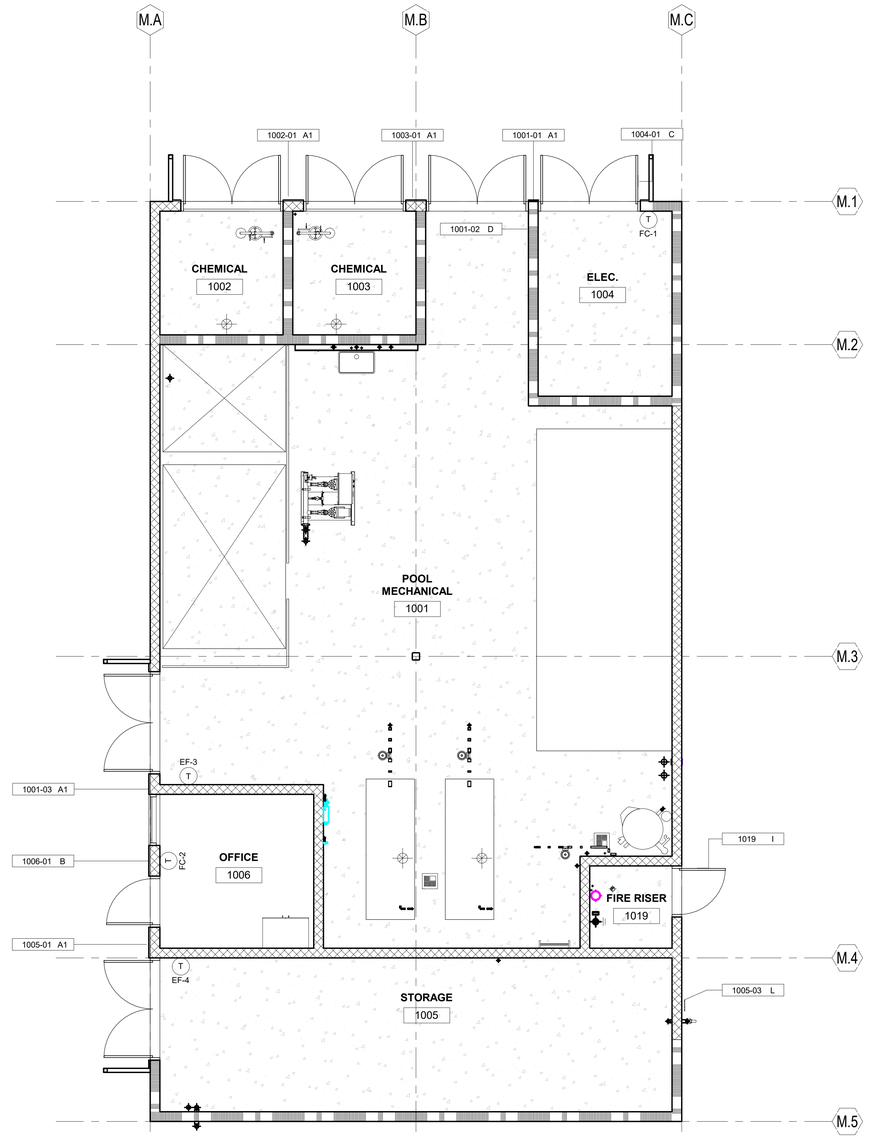

SIGNAGE PLAN - POOL MECHANICAL BUILDING | 1/4" = 1'-0" | 05

KEYNOTES

IDENTIFICATION STAMP
DIV. OF THE STATE ARCHITECT
APP: 02-119490 INC:
REVIEWED FOR
SS ☑ FLS ☑ ACS ☑
DATE: 09/13/2022

LEGEND

XXX-XX-XX
- SIGN TYPE
- SIGN TYPE
- SIGN NUMBER
- ROOM NUMBER

GENERAL NOTES

1. FOR SIGNAGE DETAILS, REF: A10.11
2. FOR ACCESSIBILITY SIGNAGE NOTES, REF: 01/A10.11
3. FOR SIGNAGE MOUNTING CRITERIA, REF: 13/A10.11
4. FOR SIGN MATERIAL, COLOR, LETTERING, TYPEFACE, SUBMITTAL REQUIREMENTS, REFER TO SPECIFICATIONS SECTION 10 14 00
5. FOR SIGNAGE NOT INDICATING TEXT ALLOW FOR 12 LETTERS/NUMBERS.
6. VERIFY ALL SIGN TEXT, COLOR, AND GRAPHICS WITH ARCHITECT PRIOR TO FABRICATION OF ALL SIGNS
7. REFER TO POOL DRAWINGS FOR REQUIRE HAZARD CHEMICAL SIGNAGE

KEY PLAN

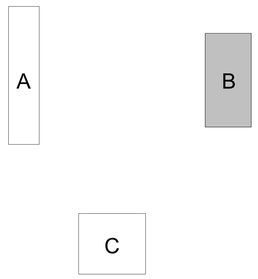

LPA
ARCHITECTURE ENGINEERING INTERIORS
LANDSCAPE ARCHITECTURE PLANNING

916-287-2400 Office
916-287-2401 Fax
LPADesignStudios.com
431 I Street,
Suite 107
Sacramento, California 95814

LICENSED ARCHITECT
JAMING W. MAY
C-33172
REN 05-31-23
STATE OF CALIFORNIA

This document and all other project documents, ideas, aesthetics and designs incorporated therein are instruments of service. All project documents are copyright protected, are the property of LPA, Inc. (LPA) and cannot be lawfully used in whole or in part for any project or purpose except as set forth in the contractual agreement between LPA and its Client. The unauthorized disclosure and/or use of the project documents (including the creation of derivative works), may give rise to liability for copyright infringement, unlawful disclosure, use or misappropriation of property rights held by LPA. The unauthorized use of the project documents will give rise to the recovery of monetary losses and damages including attorney fees and costs for which the unauthorized user will be held liable.
Project documents describe the design intent of the work and are not a representation of as-built or existing conditions. LPA is not responsible for any discrepancies between the project documents and the existing conditions.

© LPA, Inc.

DAVIS SR HIGH SCHOOL AQUATICS CENTER
315 W 14TH ST., DAVIS, CA 95616

Developed for
DAVIS JOINT UNIFIED SCHOOL DISTRICT

Revision	Date

Submittal	Date
50% DD REVIEW	06/15/2021
100% DD SUBMITTAL	07/26/2021
50% CD REVIEW	10/08/2021
100% CD DSA SUBMITTAL	10/22/2021
DSA SUBMITTAL	03/24/2022

Job Number	1904413
Date Published	03/24/2022
Checked By	Checker
Scale	As indicated

SIGNAGE PLAN - POOL MECHANICAL BUILDING

A10.01

SIGNAGE SCHEDULE

Mark	Type Mark	Sign Text Line 1	Sign Text Line 2	Mounting Location	Detail Reference	Comments
1001-01	A1	1001	POOL MECHANICAL	WALL	05/A10.11	
1001-02	D	N/A	EXIT	WALL	08/A10.11	
1001-03	A1	1001	POOL MECHANICAL	WALL	05/A10.11	
1002-01	A1	1002	CHEMICAL	WALL	05/A10.11	
1003-01	A1	1003	CHEMICAL	WALL	05/A10.11	
1004-01	C	1004	ELECTRICAL ROOM	DOOR	19/A10.11	
1005-01	A1	1005	STORAGE	WALL	05/A10.11	
1005-02	K	EMERGENCY	GAS SHUT-OFF	WALL	02/A10.12	
1006-01	B	1006	OFFICE	WALL	07/A10.11	
1007-01	F(C)	N/A	N/A	DOOR	20/A10.11	
1007-02	J	N/A	N/A	WALL	16/A10.11	
1008-01	F(C)	N/A	N/A	DOOR	13/A10.11	
1008-02	J	N/A	N/A	WALL	16/A10.11	
1009-01	F(C)	N/A	N/A	DOOR	20/A10.11	
1009-02	J	N/A	N/A	WALL	16/A10.11	
1010 -01	A1	1010	CUSTODIAL	WALL	05/A10.11	
1011-01	A1	1011	STORAGE	WALL	05/A10.11	
1011-02	L	EMERGENCY	GAS SHUT-OFF	WALL	02/A10.12	
1012-01	A2	1012	CHANGING ROOM	WALL	06/A10.11	
1013-01	F(B)	N/A	N/A	DOOR	20/A10.11	
1013-02	H	N/A	N/A	WALL	15/A10.11	
1014-01	F(A)	N/A	N/A	DOOR	20/A10.11	
1014-02	G	N/A	N/A	WALL	14/A10.11	
1015-01	A2	1015	CHANGING ROOM	WALL	06/A10.11	
1016-01	F(C)	N/A	N/A	DOOR	20/A10.11	
1016-02	J	N/A	N/A	WALL	16/A10.11	
1017-01	F(C)	N/A	N/A	DOOR	20/A10.11	
1017-02	J	N/A	N/A	WALL	16/A10.11	
1018-01	C	1011	IDF	WALL	19/A10.11	
1019	I	1019	FIRE RISER INSIDE	DOOR	18/A10.11	

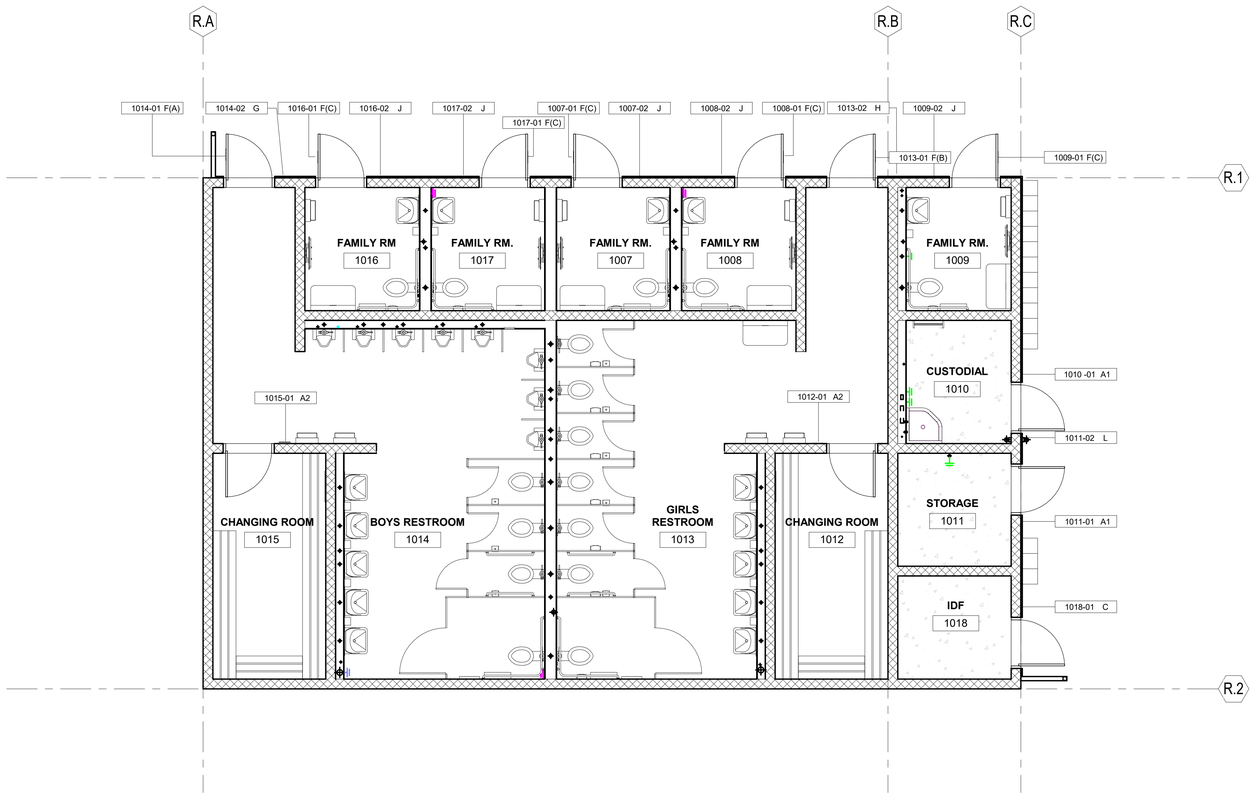

SIGNAGE PLAN - POOL RESTROOM BUILDING | 1/4" = 1'-0" | 05

KEYNOTES

IDENTIFICATION STAMP
DIV. OF THE STATE ARCHITECT
APP: 02-119490 INC:
REVIEWED FOR
SS ☑ FLS ☑ ACS ☑
DATE: 09/13/2022

LEGEND

XXX-XX-XX

- SIGN TYPE
- SIGN TYPE
- SIGN NUMBER
- ROOM NUMBER

GENERAL NOTES

1. FOR SIGNAGE DETAILS, REF: A10.11
2. FOR ACCESSIBILITY SIGNAGE NOTES, REF: 01/A10.11
3. FOR SIGNAGE MOUNTING CRITERIA, REF: 13/A10.11
4. FOR SIGN MATERIAL, COLOR, LETTERING, TYPEFACE, SUBMITTAL REQUIREMENTS, REFER TO SPECIFICATIONS SECTION 10 14 00
5. FOR SIGNAGE NOT INDICATING TEXT ALLOW FOR 12 LETTERS/NUMBERS.
6. VERIFY ALL SIGN TEXT, COLOR, AND GRAPHICS WITH ARCHITECT PRIOR TO FABRICATION OF ALL SIGNS
7. REFER TO POOL DRAWINGS FOR REQUIRE HAZARD CHEMICAL SIGNAGE

KEY PLAN

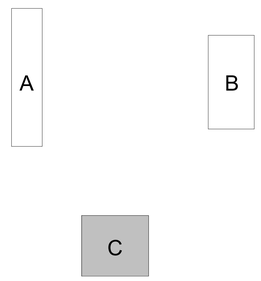

LPA

ARCHITECTURE ENGINEERING INTERIORS
LANDSCAPE ARCHITECTURE PLANNING

916-287-2400 Office

916-287-2401 Fax

LPADesignStudios.com

431 I Street,
Suite 107
Sacramento, California 95814

LICENSED ARCHITECT
JIANG W. WEN
C-33172
REN 06-31-23
STATE OF CALIFORNIA

This document and all other project documents, ideas, aesthetics and designs incorporated therein are instruments of service. All project documents are copyright protected, are the property of LPA, Inc. (LPA) and cannot be lawfully used in whole or in part for any project or purpose except as set forth in the contractual agreement between LPA and its Client. The unauthorized disclosure and/or use of the project documents (including the creation of derivative works), may give rise to liability for copyright infringement, unlawful disclosure, use or misappropriation of property rights held by LPA. The unauthorized use of the project documents will give rise to the recovery of monetary losses and damages including attorney fees and costs for which the unauthorized user will be held liable.
Project documents describe the design intent of the work and are not a representation of as-built or existing conditions. LPA is not responsible for any discrepancies between the project documents and the existing conditions.

© LPA, Inc.

DAVIS SR HIGH SCHOOL
AQUATICS CENTER
315 W 14TH ST., DAVIS, CA 95616

Developed for
DAVIS JOINT UNIFIED SCHOOL DISTRICT

Revision	Date

Submittal	Date
50% DD REVIEW	06/15/2021
100% DD SUBMITTAL	07/26/2021
90% CD REVIEW	10/08/2021
100% CD DSA SUBMITTAL	10/22/2021
DSA SUBMITTAL	03/24/2022

Job Number	1904413
Date Published	03/24/2022
Checked By	Checker
Scale	As indicated

SIGNAGE PLAN - POOL RESTROOM BUILDING

A10.02

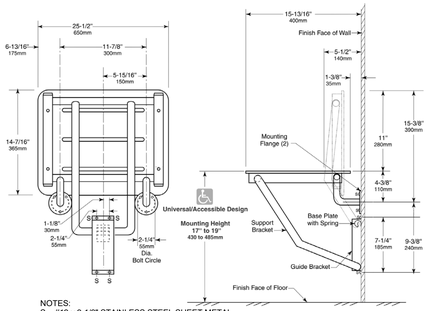

NOTES:
S = #12 x 2-1/2" STAINLESS STEEL SHEET METAL SCREWS WITH BACKING AT METAL STUD WALL.

S = 3/8" HILTI KWIK HUS-EZ W/ 3 1/4" MIN. EMBED AT MASONARY WALL.

NOTE: REFER TO 11/S6.92 FOR BACKING AT METAL STUD WALL

FOLDABLE SEAT | 1" = 1'-0" | 20

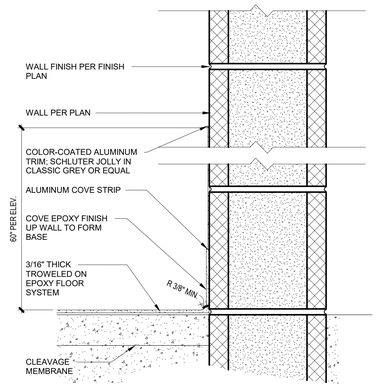

EPOXY FLOORING / BASE @ CMU WALL | 3" = 1'-0" | 08

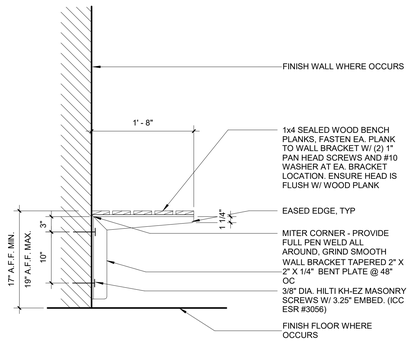

WOOD BENCH SUPPORT | 1" = 1'-0" | 19

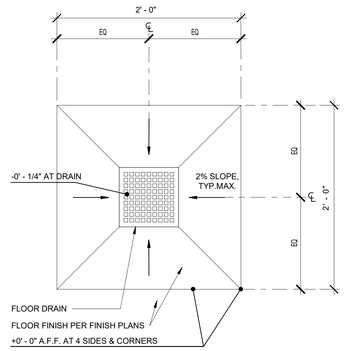

PLAN @ CONCRETE FLOOR

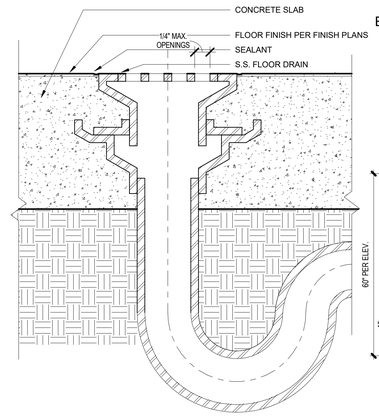

SECTION @ FINISHED CONCRETE FLOOR

N.T.S.

FLOOR DRAIN DETAILS | 3" = 1'-0" | 11

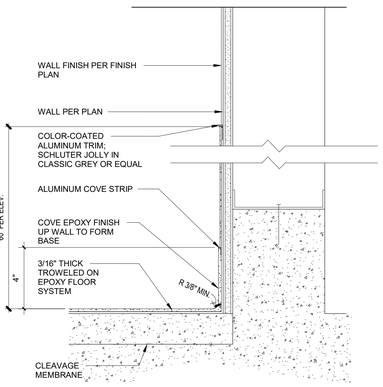

EPOXY FLOORING / BASE @ METAL STUD | 3" = 1'-0" | 07

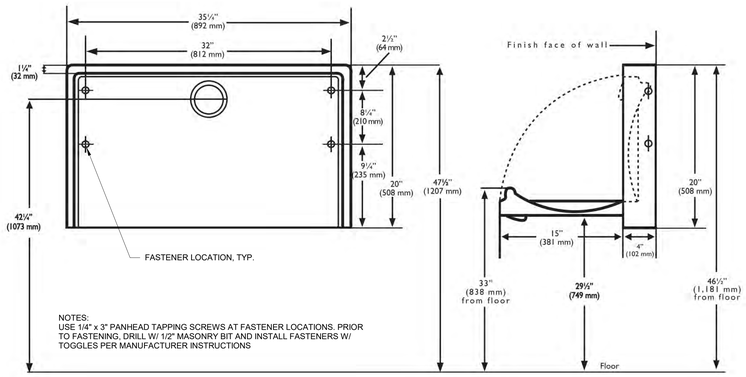

NOTES:
USE 1/4" x 3" PANHEAD TAPPING SCREWS AT FASTENER LOCATIONS. PRIOR TO FASTENING, DRILL W/ 1/2" MASONRY BIT AND INSTALL FASTENERS W/ TOGGLES PER MANUFACTURER INSTRUCTIONS

BABY CHANGING STATION | 1 1/2" = 1'-0" | 18

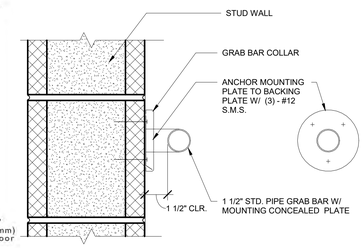

GRAB BAR @ CMU WALL | 3" = 1'-0" | 14

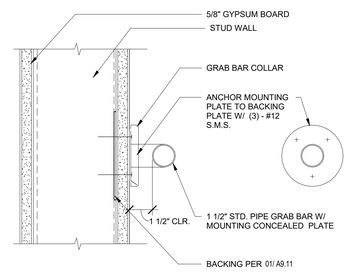

GRAB BAR @ METAL STUD | 3" = 1'-0" | 10

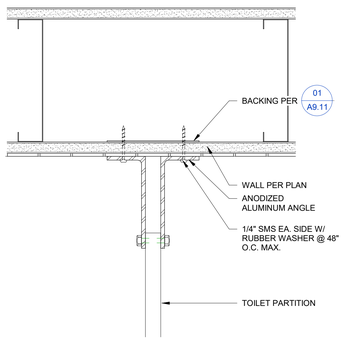

PARTITION DETAIL | 3" = 1'-0" | 06

IDENTIFICATION STAMP
DIV. OF THE STATE ARCHITECT
APP: 02-119490 INC:
REVIEWED FOR
SS ☑ FLS ☑ ACS ☑
DATE: 09/13/2022

LPA
ARCHITECTURE ENGINEERING INTERIORS
LANDSCAPE ARCHITECTURE PLANNING

916-287-2400 Office
916-287-2401 Fax
LPADesignStudios.com
431 I Street,
Suite 107
Sacramento, California 95814

LICENSED ARCHITECT
DONG W. MA
No. C-33172
REN 05-31-23
STATE OF CALIFORNIA

This document and all other project documents, ideas, aesthetics and designs incorporated therein are instruments of service. All project documents are copyright protected, are the property of LPA, Inc. (LPA) and cannot be lawfully used in whole or in part for any project or purpose except as set forth in the contractual agreement between LPA and its Client. The unauthorized disclosure and/or use of the project documents (including the creation of derivative works), may give rise to liability for copyright infringement, unlawful disclosure, use or misappropriation of property rights held by LPA. The unauthorized use of the project documents will give rise to the recovery of monetary losses and damages including attorney fees and costs for which the unauthorized user will be held liable.
Project documents describe the design intent of the work and are not a representation of as-built or existing conditions. LPA is not responsible for any discrepancies between the project documents and the existing conditions.

© LPA, Inc.

DAVIS SR HIGH SCHOOL
AQUATICS CENTER
315 W 14TH ST., DAVIS, CA 95616

Developed for
DAVIS JOINT UNIFIED SCHOOL DISTRICT

Revision	Date

Submittal	Date
50% DD REVIEW	06/15/2021
100% DD SUBMITTAL	07/26/2021
50% CD REVIEW	10/08/2021
100% CD DSA SUBMITTAL	10/22/2021
DSA SUBMITTAL	03/24/2022

Job Number	1904413
Date Published	03/24/2022
Checked By	Checker
Scale	As indicated

RESTROOM DETAILS

A9.41

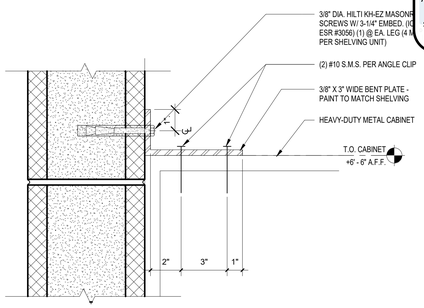

METAL SHELVING ANCHORAGE @ WALL | 04

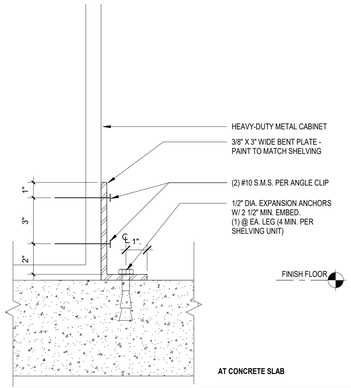

METAL SHELVING ANCHORAGE @ FLOOR | 03

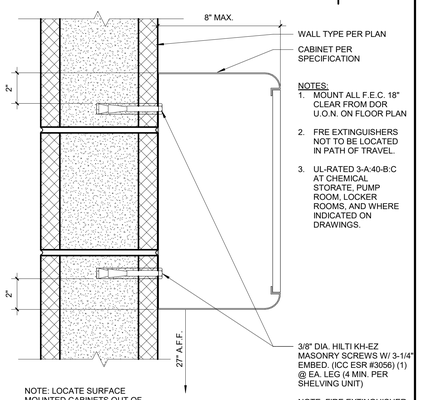

NOTES:
1. MOUNT ALL F.E.C. 18" CLEAR FROM DOR U.O.N. ON FLOOR PLAN
2. FRE EXTINGUISHERS NOT TO BE LOCATED IN PATH OF TRAVEL.
3. UL-RATED 3-A:40-B:C AT CHEMICAL STORATE, PUMP ROOM, LOCKER ROOMS, AND WHERE INDICATED ON DRAWINGS.

SURFACE MOUNTED FEC | 02

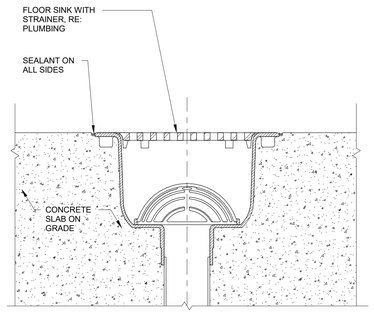

FLOOR DRAIN AT CONCRETE FLOOR | 01

IDENTIFICATION STAMP
DIV. OF THE STATE ARCHITECT
APP: 02-119490 INC:
REVIEWED FOR
SS ☑ FLS ☑ ACS ☑
DATE: 09/13/2022

LPA

ARCHITECTURE ENGINEERING INTERIORS
LANDSCAPE ARCHITECTURE PLANNING

916-287-2400 Office

916-287-2401 Fax

LPADesignStudios.com

431 I Street,
Suite 107
Sacramento, California 95814

LICENSED ARCHITECT
DARING W. KIN
No. C-33172
REN 05-31-23
STATE OF CALIFORNIA

This document and all other project documents, ideas, aesthetics and designs incorporated therein are instruments of service. All project documents are copyright protected, are the property of LPA, Inc. (LPA) and cannot be lawfully used in whole or in part for any project or purpose except as set forth in the contractual agreement between LPA and its Client. The unauthorized disclosure and/or use of the project documents (including the creation of derivative works), may give rise to liability for copyright infringement, unlawful disclosure, use or misappropriation of property rights held by LPA. The unauthorized use of the project documents will give rise to the recovery of monetary losses and damages including attorney fees and costs for which the unauthorized user will be held liable.
Project documents describe the design intent of the work and are not a representation of as-built or existing conditions. LPA is not responsible for any discrepancies between the project documents and the existing conditions.

© LPA, Inc.

DAVIS SR HIGH SCHOOL
AQUATICS CENTER
315 W 14TH ST., DAVIS, CA 95616

Developed for
DAVIS JOINT UNIFIED SCHOOL DISTRICT

Revision	Date

Submittal	Date
50% DD REVIEW	06/15/2021
100% DD SUBMITTAL	07/26/2021
50% CD REVIEW	10/08/2021
100% CD DSA SUBMITTAL	10/22/2021
DSA SUBMITTAL	03/24/2022

Job Number	1904413
Date Published	03/24/2022
Checked By	Checker
Scale	3" = 1'-0"

MISC. DETAILS

A9.71

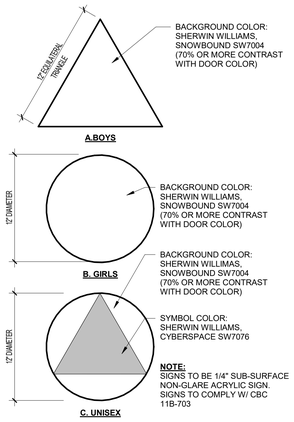

TYPE "F" - RESTROOM DOOR SIGN | 6" = 1'-0" | 20

NOTE:
- FOR GENERAL REQUIREMENTS REFER TO 01/ A10.11
- FOR MOUNTING LOCATION AND REQUIREMETNS REFER TO13/A10.11
- FACE TO BE SHERWIN WILLIAMS CYBERSPACE, SW7076. COPY AND SYMBOLS TO BE SHERWIN WILLIAMS PURE WHITE, SW7005.
- 1/4" INTEGRAL COLOR ACRYLIC SIGN WITH FUSED RAISED LETTERING AND BRAILLE

TYPE "J" - ALL GENDER TOILET SIGN | 6" = 1'-0" | 16

NOTE:
- FOR GENERAL REQUIREMENTS REFER TO 01/ A10.11
- FOR MOUNTING LOCATION AND REQUIREMENTS REFER TO 13/A10.11
- INTERIOR SIGNS FACE TO BE SHERWIN WILIAMS CYBERSPACE, SW7076. COPY TO BE SHERWIN WILLIAMS PURE WHITE, SW7005.
- 1/4" INTEGRAL COLOR ACRYLIC SIGN WITH FUSED RAISED LETTERING AND BRAILLE

TYPE "E" - EXIT ROUTE SIGN | 12" = 1'-0" | 12

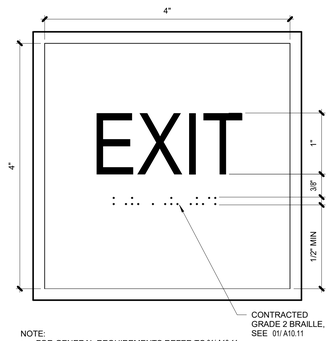

NOTE:
- FOR GENERAL REQUIREMENTS REFER TO 01/ A10.11
- STROKE THICKNESS: CBC TABLE 11B-703.5.7
- INTERIOR SIGNS FACE TO BE SHERWIN WILLIAMS CYBERSPACE, SW7076. COPY TO BE SHERWIN WILLIAMS PURE WHITE, SW7005.
- 1/4" INTEGRAL COLOR ACRYLIC SIGN WITH FUSED RAISED LETTERING AND BRAILLE

TYPE "D" - EXIT SIGN | 12" = 1'-0" | 08

SIGNS SHALL COMPLY WITH SECTION CBC 11B-703. WHERE BOTH VISUAL AND TACTILE CHARACTERS ARE REQUIRED.

RAISED CHARACTERS SHALL COMPLY WITH CBC 11B-703.2 AND SHALL BE DUPLICATED IN BRAILLE COMPLYING WITH SECTION CBC 11B-703.3.

- CHARACTER DEPTH: CBC 11B-703.2.1
- CHARACTER CASE: CBC 11B-703.2.2
- CHARACTER STYLE: CBC 11B-703.2.3
- CHARACTER PROPORTIONS: CBC 11B-703.2.4
- CHARACTER HEIGHT: CBC 11B-703.2.5
- CHARACTER STROKE THICKNESS: CBC 11B-703.2.6
- CHARACTER SPACING: CBC 11B-703.2.7
- CHARACTER LINE SPACING: CBC 11B-703.2.8
- CHARACTER FORMAT: CBC 11B-703.2.9

BRAILLE CHARACTERS SHALL COMPLY WITH CBC 11B-703.3

- BRAILLE SHALL BE CONTRACTED (GRADE 2) AND SHALL COMPLY WITH SECTIONS CBC11B-703.3 AND CBC 11B-703.4.
- BRAILLE DIMENSIONS AND CAPITALIZATION: CBC TABLE 11B-703.3.1
- BRAILLE POSITION: CBC TABLE 11B-703.3.2

VISUAL CHARACTERS SHALL COMPLY WITH CBC 11B-703.5

- FINISH AND CONTRAST: CBC11B-703.5.1
- STROKE THICKNESS: CBC TABLE 11B-703.5.7
- FORMAT: CBC TABLE 11B-703.5.10

SIGN RAISED CHARACTER & BRAILLE NOTES | 04

GENERAL NOTES:

1. CHARACTER TYPE AND SIZE: CHARACTERS ON SIGNS SHALL BE RAISED 1/32". UPPER CASE, 'ARIAL NARROW' TYPE AND SHALL BE ACCOMPANIED WITH CALIFORNIA GRADE II BRAILLE. RAISED CHARACTERS SHALL BE AT LEAST 5/8" HIGH, BUT NO HIGHER THAN 2".
2. BRAILLE STANDARD DIMENSIONS: CALIFORNIA GRADE II BRAILLE SHALL BE USED WHEREVER BRAILLE IS REQUIRED. INDIVIDUAL BRAILLE DOTS SHALL EACH BE DISTINCT AND SEPARATE. EACH DOT SHALL BE ROUNDED OR DOMED IN LIEU OR SQUARE AND FLAT TOPPED. DOTS SHALL BE RAISED A MINIMUM OF 0.025 - 0.037" ABOVE THE BACKGROUND.

   0.3" SPACE BETWEEN CORRESPONDING DOTS IN ADJACENT CELLS (LETTERS)

   0.1" x 0.1" GRID
3. FINISH AND CONTRAST: CHARACTERS, SYMBOLS AND THEIR BACKGROUNDS SHALL HAVE A NON-GLARE FINISH AND CONTRAST 70% MIN. WITH THEIR BACKGROUNDS. CHARACTERS & SYMBOLS - COLOR CYBERSPACE, SNOWBOUND WHITE BACKGROUND AND PANEL - 1/4" THICK ACRYLIC PANEL WITH PHOTO POLYMER RAISED TACTILE COPY SUB-SURFACE SYMBOL (U.N.O.)
4. PROPORTIONS: CHARACTERS AND SYMBOLS SHALL HAVE A WIDTH-TO-HEIGHT RATIO OF BETWEEN 3:5 AND 1:1 AND A STROKE WIDTH-TO-HEIGHT RATIO OF BETWEEN 1:5 AND 1:10, 703.5.4.
5. EXTERIOR SIGNS SHALL BE METAL COMPONENTS SUITABLE TO EXTERIOR USE AND SIMILAR TO INTERIOR SIGNS FOR SHAPE AND FORM.
6. CONTRACTOR TO SUBMIT A SCHEDULE TO VERIFY ALL PERMANENT NUMBERS AND TEXT PRIOR TO FABRICATION.
7. SIGNAGE SHALL COMPLY WITH CBC SECTION 11B-703

CROSS SECTION
VISUAL/TACTILE CHARACTERS

RECTANGULAR | BEVELED | ROUNDED

1/8"

CHARACTER SPACING

BRAILLE CELL
INTER-CELL SPACING = .20"

BRAILLE DOT
.025"
1/40"

ROUND DOT REQUIRED

NO
SQUARE DOT (NOT ACCEPTABLE)

FONT RATIO

WIDTH TO HEIGHT RATIO
60% - 100%
3:5 - 1:1

STROKE TO HEIGHT RATIO
10% - 20%
1:10 - 1:5

CONTRAST

MINIMUM 70% CONTRAST DIFFERENCE BETWEEN CHARACTERS/GRAPHICS AND BACKGROUND

0% WHITE ON 100% BACK-GROUND | 0% WHITE ON 70% BACK-GROUND | 30% TEXT CONTRAST ON 100% BACK-GROUND | 15% TEXT CONTRAST ON 100% BACK-GROUND

STATE FIRE MARSHAL NOTES:

CALIFORNIA FIRE CODE, SECTION 1011.3 TACTILE EXIT SIGNAGE

TACTILE EXIT SIGNS SHALL BE REQUIRED AT THE FOLLOWING LOCATIONS:

1. "EXIT" SIGN @ EACH GRADE LEVEL EXTERIOR EXIT DOOR.
2. "EXIT ROUTE" SIGN @ EACH EXIT DOOR THAT LEADS DIRECTLY TO A GRADE LEVEL EXTERIOR EXIT BY MEANS OF AN EXIT ENCLOSURE OR AN EXIT PASSAGEWAY.
3. "EXIT ROUTE" SIGN @ EACH EXIT ACCESS DOOR FROM AN INTERIOR ROOM OR AREA TO A CORRIDOR OR HALLWAY THAT IS REQUIRED TO HAVE VISUAL EXIT SIGNS.
4. "TO EXIT" SIGN @ EACH EXIT ACCESS DOOR THROUGH A HORIZONTAL EXIT.

NOTE:
* SIGNAGE SHALL COMPLY WITH CBC SECTION 11B-703
* SIGNAGE SHALL COMPLY WITH CFC SECTION 1011.3

SIGNAGE GENERAL NOTES | 01

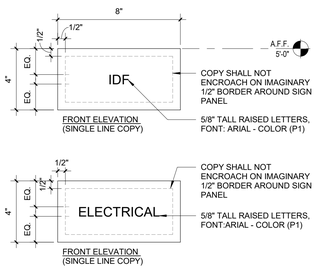

NOTE: MACHINERY SPACES DO NOT REQUIRED TO BE ACCESSIBLE AND SHOW BRAILLE (11B-203.5).

TYPE "C" MACHINERY ROOM SIGNAGE | 3" = 1'-0" | 19

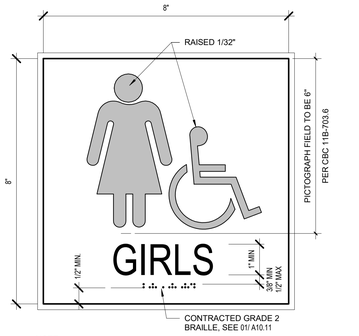

NOTE:
- FOR GENERAL REQUIREMENTS REFER TO 01/ A10.11
- FOR MOUNTING LOCATION AND REQUIREMENTS REFER TO 13/A10.11
- FACE TO BE SHERWIN WILLIAMS CYBERSPACE, SW7076. COPY AND SYMBOLS TO BE SHERWIN WILLIAMS PURE WHITE, SW7005.
- 1/4" INTEGRAL COLOR ACRYLIC SIGN WITH FUSED RAISED LETTERING AND BRAILLE

TYPE "H" - WOMEN'S TOILET SIGN | 6" = 1'-0" | 15

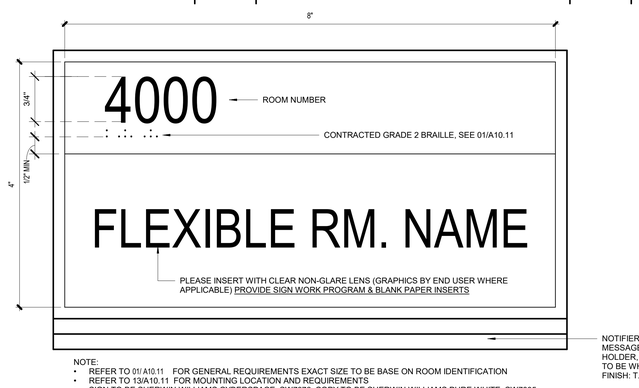

NOTE:
- REFER TO 01/ A10.11 FOR GENERAL REQUIREMENTS EXACT SIZE TO BE BASE ON ROOM IDENTIFICATION
- INTERIOR SIGNS FACE TO BE SHERWIN WILLIAMS CYBERSPACE, SW7076. COPY TO BE SHERWIN WILLIAMS PURE WHITE, SW7005.
- SIGN TO BE SHERWIN WILLIAMS CYBERSPACE, SW7076. COPY TO BE SHERWIN WILLIAMS PURE WHITE, SW7005.
- 1/4" INTEGRAL COLOR ACRYLIC SIGN WITH FUSED RAISED LETTERING AND BRAILLE

TYPE "B" - CHANGEABLE OFFICE SIGNAGE | 12" = 1'-0" | 07

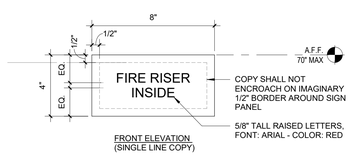

NOTES:
- MACHINERY SPACES DO NOT REQUIRED TO BE ACCESSIBLE AND SHOW BRAILLE (11B-203.5)
- FASTEN SIGN TO WALL WITH PERMANENT ADHESIVE

TYPE "I" SIGNAGE | 3" = 1'-0" | 18

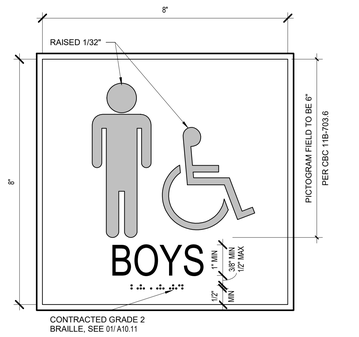

NOTE:
- FOR GENERAL REQUIREMENTS REFER TO 01/ A10.11
- FOR MOUNTING LOCATION AND REQUIREMENT REFER TO 13/A10.11
- FACE TO BE SHERWIN WILLLIAMS CYBERSPACE, SW7076. COPY AND SYMBOLS TO BE SHERWIN WILLIAMS PURE WHITE, SW7005.
- 1/4" INTEGRAL COLOR ACRYLIC SIGN WITH FUSED RAISED LETTERING AND BRAILLE

TYPE "G" - MEN'S TOILET SIGN | 6" = 1'-0" | 14

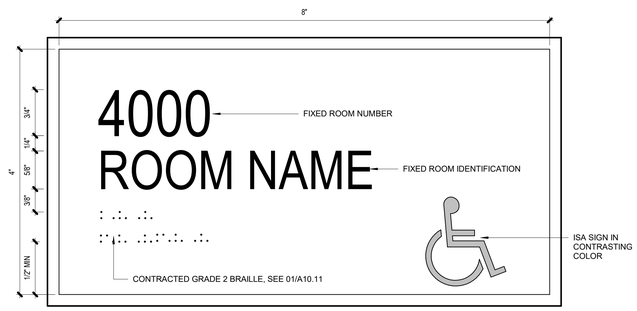

NOTE:
- FOR GENERAL REQUIREMENTS - EXACT SIZE TO BE BASED ON ROOM IDENTIFICATION REFER TO 01/ A10.11
- FOR MOUNTING LOCATION REFER TO 13/A10.11
- INTERIOR SIGNS FACE TO BE SHERWIN WILLIAMS CYBERSPACE, SW7076. COPY TO BE SHERWIN WILLIAMS PURE WHITE, SW7005.
- EXTERIOR SIGNS FACE TO BE SHERWIN WILLIAMS CYBERSPACE, SW7076. COPY TO BE SHERWIN WILIMAS PURE WHITE, SW7005.
- 1/4" INTEGRAL COLOR ACRYLIC SIGN WITH FUSED RAISED LETTERING AND BRAILLE AT INTERIOR

TYPE "A2" - PERMANENT SIGNAGE ISA | 12" = 1'-0" | 06

NOTES:
1. SIGN MOUNTING LOCATION AND HEIGHT SHALL COMPLY WITH CBC 11B-703.4.1; CBC 11B-703.4.2; CBC 11B-703.7.2.6
2. AT SINGLE DOORS, LOCATE SIGN ON LATCH SIDE OUTSIDE OF DOOR ENTERING ROOM THAT IS IDENTIFIED ON SIGN
3. WHEN SIGNS ARE MOUNTED TO GLASS, PROVIDE VINYL BACKING BETWEEN SIGN AND GLASS
4. WHEN SIGNS ARE MOUNTED ON BOTH SIDES OF GLASS, ALIGN SIGNS

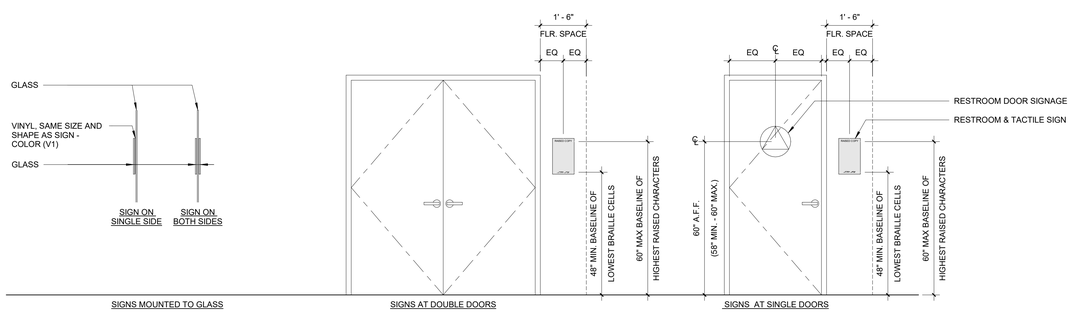

SIGN MOUNTING | NTS | 13

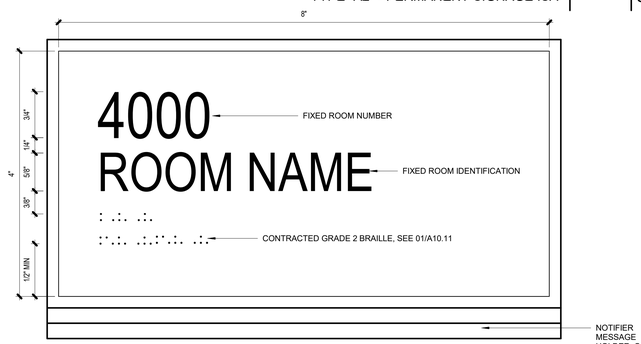

NOTE:
- FOR GENERAL REQUIREMENTS - EXACT SIZE TO BE BASED ON ROOM IDENTIFICATION REFER TO 01/ A10.11
- FOR MOUNTING LOCATION AND REQUIREMENTS REFER TO 13/A10.11
- INTERIOR SIGNS FACE TO BE SHERWIN WILLIAMS CYBERSPACE, SW7074. COPY TO BE SHERWIN WILLIAMS PURE WHITE, SW7005.
- EXTERIOR SIGNS FACE TO BE SHERWIN WILLIAMS CYBERSPACE SW7074. COPY TO BE SHERWIN WILIMAS PURE WHITE SW7005.
- 1/4" INTEGRAL COLOR ACRYLIC SIGN WITH FUSED RAISED LETTERING AND BRAILLE AT INTERIOR

TYPE "A1" - PERMANENT SIGNAGE | 12" = 1'-0" | 05

IDENTIFICATION STAMP
DIV. OF THE STATE ARCHITECT
APP: 02-119490 INC:
REVIEWED FOR
SS ☑ FLS ☑ ACS ☑
DATE: 09/13/2022

LPA
ARCHITECTURE ENGINEERING INTERIORS
LANDSCAPE ARCHITECTURE PLANNING

916-287-2400 Office
916-287-2401 Fax
LPADesignStudios.com
431 I Street,
Suite 107
Sacramento, California 95814

LICENSED ARCHITECT
CHUNG W. MAK
C-33172
REN 05-31-23
STATE OF CALIFORNIA

This document and all other project documents, ideas, aesthetics and designs incorporated therein are instruments of service. All project documents are copyright protected, are the property of LPA, Inc. (LPA) and cannot be lawfully used in whole or in part for any project or purpose except as set forth in the contractual agreement between LPA and its Client. The unauthorized disclosure and/or use of the project documents (including the creation of derivative works), may give rise to liability for copyright infringement, unlawful disclosure, use or misappropriation of property rights held by LPA. The unauthorized use of the project documents will give rise to the recovery of monetary losses and damages including attorney fees and costs for which the unauthorized user will be held liable.
Project documents describe the design intent of the work and are not a representation of as-built or existing conditions. LPA is not responsible for any discrepancies between the project documents and the existing conditions.

© LPA, Inc.

DAVIS SR HIGH SCHOOL AQUATICS CENTER
315 W 14TH ST., DAVIS, CA 95616

Developed for
DAVIS JOINT UNIFIED SCHOOL DISTRICT

Revision	Date

Submittal	Date
50% DD REVIEW	06/15/2021
100% DD SUBMITTAL	07/26/2021
50% CD REVIEW	10/08/2021
100% CD DSA SUBMITTAL	10/22/2021
DSA SUBMITTAL	03/24/2022

Job Number	1904413
Date Published	03/24/2022
Checked By	SK
Scale	As indicated

SIGNAGE DETAILS

A10.11

IDENTIFICATION STAMP
DIV. OF THE STATE ARCHITECT
APP: 02-119490 INC:
REVIEWED FOR
SS ☑ FLS ☑ ACS ☑
DATE: 09/13/2022

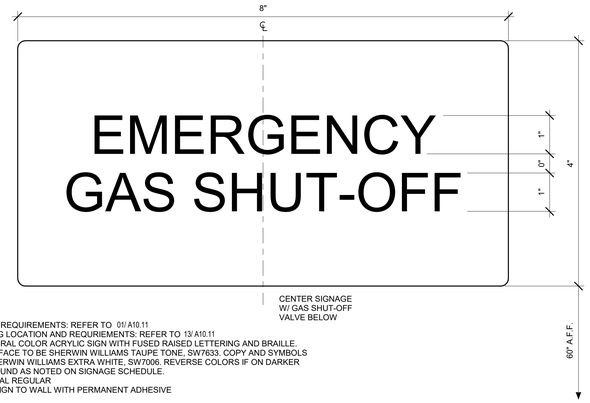

CENTER SIGNAGE
W/ GAS SHUT-OFF
VALVE BELOW

NOTES:
- GENERAL REQUIREMENTS: REFER TO 01/ A10.11
- MOUNTING LOCATION AND REQURIEMENTS: REFER TO 13/ A10.11
- 1/8" INTEGRAL COLOR ACRYLIC SIGN WITH FUSED RAISED LETTERING AND BRAILLE.
- COLORS: FACE TO BE SHERWIN WILLIAMS TAUPE TONE, SW7633. COPY AND SYMBOLS TO BE SHERWIN WILLIAMS EXTRA WHITE, SW7006. REVERSE COLORS IF ON DARKER BACKGROUND AS NOTED ON SIGNAGE SCHEDULE.
- FONT: ARIAL REGULAR
- FASTEN SIGN TO WALL WITH PERMANENT ADHESIVE

TYPE "L" GAS SHUT-OFF SIGNAGE | 12" = 1'-0" | 03

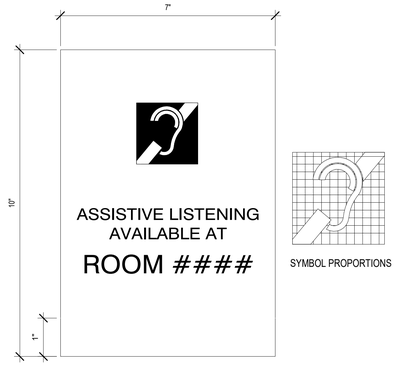

NOTE:
1. GENERAL REQUIREMENTS, MOUNTING LOCATION, CONTRACTED GRADE 2 BRAILLE, BACKGROUND AND TEXT COLOR RE: 01/A10.11

TYPE 'K' PRIMARY REGULATORY | 6" = 1'-0" | 02

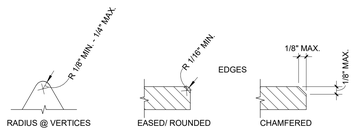

EDGES AND VERTICES ON GEOMETRIC SYMBOLS | 12" = 1'-0" | 01

LPA
ARCHITECTURE ENGINEERING INTERIORS
LANDSCAPE ARCHITECTURE PLANNING

916-287-2400 Office
916-287-2401 Fax
LPADesignStudios.com
431 I Street,
Suite 107
Sacramento, California 95814

LICENSED ARCHITECT
JONG W. KIM
C-33172
REN 05-31-23
STATE OF CALIFORNIA

This document and all other project documents, ideas, aesthetics and designs incorporated therein are instruments of service. All project documents are copyright protected, are the property of LPA, Inc. (LPA) and cannot be lawfully used in whole or in part for any project or purpose except as set forth in the contractual agreement between LPA and its Client. The unauthorized disclosure and/or use of the project documents (including the creation of derivative works), may give rise to liability for copyright infringement, unlawful disclosure, use or misappropriation of property rights held by LPA. The unauthorized use of the project documents will give rise to the recovery of monetary losses and damages including attorney fees and costs for which the unauthorized user will be held liable.
Project documents describe the design intent of the work and are not a representation of as-built or existing conditions. LPA is not responsible for any discrepancies between the project documents and the existing conditions.

© LPA, Inc.

DAVIS SR HIGH SCHOOL
AQUATICS CENTER
315 W 14TH ST., DAVIS, CA 95616

Developed for
DAVIS JOINT UNIFIED SCHOOL DISTRICT

Revision	Date

Submittal	Date
50% DD REVIEW	06/15/2021
100% DD SUBMITTAL	07/26/2021
50% CD REVIEW	10/08/2021
100% CD DSA SUBMITTAL	10/22/2021
DSA SUBMITTAL	03/24/2022

Job Number	1904413
Date Published	03/24/2022
Checked By	SK
Scale	As indicated

SIGNAGE DETAILS

A10.12

A. GENERAL

1. Applicable Code: 2019 California Building Code (CBC) - DSA SS. References to industry standards herein shall be latest edition as adopted by Applicable Code. References to ICC-ES Evaluation Reports for proprietary materials herein shall be latest edition as adopted by Governing Code Authority.

Wind Design

a. Speed:	93 MPH (at all buildings) 100 MPH (at Pool Canopy)
b. Exposure:	C
c. Importance Factor I:	1.0
d. Enclosure Classification:	Enclosed (GCPi = +/- 0.18) at all buildings
e. Component Wind:	(Ea. = 10 sf)
Force at wall:	18.7 PSF (Typical), 23.0 PSF (Corner)
Force at parapet:	
Pool Mechanical Building	53.4 PSF (Typical), 53.4 PSF (Corner)
Pool Restroom Building	51.8 PSF (Typical), 66.4 PSF (Corner)

Seismic Design (Typical at All Buildings / Structures):

a. Site Class:	D
b. Spectral Acceleration (Ss, S1):	0.849, 0.325 (respectively)
c. Spectral Response Coefficient (SDS, SD1):	0.658, 0.428 (respectively)
d. Site Coefficient (Fa, Fv):	1.16, 1.976 (respectively)
e. Seismic Design Category:	D

Pool Mechanical Building:

a. Basic Seismic Force Resisting System:	Special Reinforced Masonry Wall
b. Seismic Importance Factor Ie:	1.0
c. Response Modification Factor R:	5.0
d. Risk Category:	II
e. Maximum Story Drift:	0.42 in
f. Analysis Procedure:	Equivalent Lateral Force Procedure
g. Seismic Response Coefficient, Cs:	0.132
h. Seismic Base Shear:	34.0 kips
i. Irregularities:	Vertical: None, Horizontal: None
j. Reduncancy Factor, P:	1.0 (North/South), 1.3 (East/West)

Pool Restroom Building:

a. Basic Seismic Force Resisting System:	Special Reinforced Masonry Wall
b. Seismic Importance Factor Ie:	1.0
c. Response Modification Factor R:	5.0
d. Risk Category:	II
e. Maximum Story Drift:	0.38 in
f. Analysis Procedure:	Equivalent Lateral Force Procedure
g. Seismic Response Coefficient, Cs:	0.132
h. Seismic Base Shear:	28.1 kips
i. Irregularities:	Vertical: None, Horizontal: None
j. Reduncancy Factor, P:	1.0 (North/South), 1.0 (East/West)

Pool Canopy:

a. Basic Seismic Force Resisting System:	OSMF (North/South) , OS Cant Column (East/West)
b. Seismic Importance Factor Ie:	1.25
c. Response Modification Factor R:	3.5, 1.25 Respectively
d. Risk Category:	III
e. Maximum Story Drift:	1.4 in
f. Analysis Procedure:	Equivalent Lateral Force Procedure
g. Seismic Response Coefficient, Cs:	0.235, 0.658 Respectively
h. Seismic Base Shear:	24 kips
i. Irregularities:	Vertical: None, Horizontal: None
j. Reduncancy Factor, P:	1.3 (North/South), 1.3 (East/West)

2. Governing Code Authority: Division of the State Architect

3. Field Verification: Field verify existing conditions and dimensions prior to construction. Promptly notify Architect (Structural Engineer) in case of discrepancies.

4. Design Intent: Contract Documents indicate design intent for structure in its completed state. They do not indicate method of construction. Promptly notify Architect (Structural Engineer), prior to proceeding with Work, if design intent requires further clarification.

5. Deviations, Modifications and Substitutions to Approved Structural Drawings: Must be accepted in writing by Architect (Structural Engineer) and approved by Governing Code Authority. No deviation, modification or substitution will be accepted via shop drawing review.

6. Procedures of Construction: Contractor is responsible for procedures of construction complying with national, state and local safety ordinances. Site visits (including Structural Observation) by Architect (Structural Engineer) do not constitute supervision of methods of construction.

   A. Protection of Utilities: Locate existing utilities, including those not shown on Contract Documents, and protect them from damage. Contractor bears expense of repair or replacement of utilities in conjunction with execution of Work.
   B. Excavations: Protect structure, adjacent structures, adjacent properties, streets, and utilities during excavation utilizing lagging, shoring, underpinning and related procedures as may be required. Provide necessary supports for soil at sides of excavations. Contractor and affected trades shall refer to Geotechnical Report for more information.
   C. Protection of Structure: Provide necessary measures to protect structure and adjacent buildings during execution of Work.
   D. Contractor Proposed Revisions: Where a revision of structural design or connection is proposed by Contractor to accommodate construction tolerances, construction sequence and/or dimension modifications, Contractor shall retain a structural engineer licensed in State of California to perform design. Submit stamped and signed design drawings and calculations to the Architect (Structural Engineer) for review and the Governing Code Authority for approval.
   E. Erection Plans: Determine phases of Work requiring erection plans according to applicable safety regulations. Maintain certified copies of erection plans at site during construction.
   F. Shoring, Bracing, and Other Temporary Supports: Design and erect shoring, bracing, and other temporary supports where structure has not attained design strength and as required for safe erection. Ensure floor, roof, and wall members are securely shored and braced during construction. Provide shoring at elevated beams and slabs supporting concrete or masonry walls during and after wall pour until wall attains design strength.
   G. Temporary Loading: Ensure construction loads do not exceed indicated design live load values. Notify affected sub-contractor trades of these design load limits.
   H. Fabrication, Shipment, and Erection of Structural Steel: Ensure stresses occurring during fabrication, shipment, and erection of structural steel are temporary and are less than design and allowable stress capacities of individual members. Do not impair full design and load carrying capacity of members due to fabrication, shipment, or erection. Contractor is responsible for controlling erection sequence, erection procedure, temperature differentials and weld shrinkage to minimize residue stresses. Provide additional materials for the erection of structural steel such as temporary bracing and guy cables as may be necessary at no additional cost. Remove these materials unless approved in writing by Owner. Do not tighten bolts in typical beam to column connections for erection purposes.
   I. Securing Reinforcing Steel, Dowels, Anchor Bolts and Embeds: Firmly support and accurately place complying with ACI standards prior to casting concrete or grout in masonry walls. Use ties and support bars in addition to reinforcing steel shown where necessary. No welding of reinforcing steel, including tack welding, is permitted unless otherwise accepted in writing by Architect (Structural Engineer). Provide plastic or plastic coated chairs and spacers when resting on exposed surfaces.
   J. Coordination Responsibility: Contractor is responsible for coordination of Work including that of sub-contractor trades.
   K. Core drilling shall of hardened concrete shall only be done after specific review by Architect (Structural Engineer) Core drilling shall not cut any reinforcing. Concrete coverage for reinforcement as described in these notes shall be maintained at locations of cores.

7. Submittals: Submit to Architect (Structural Engineer) as indicated on structural drawings and specifications. General Contractor shall review submittal for completeness and compliance with Contract Documents prior to submission.

   A. Request for Information (RFI) Submittals: Accompany RFI's with partial structural foundation or framing plans showing location in question and affected structural members. Copy partial plan from structural drawings and indicate grid line locations and floor level. Also provide properly drawn engineering sketches illustrating issues and Contractor's proposed solutions. Photographs are not acceptable substitutes to engineering sketches.
   B. Composite Slab Penetration Submittal: Submit to Architect (Structural Engineer) for each floor indicating size and location of each slab penetration and opening as necessary by all affected trades. Submit penetration plans together with corresponding metal decking or reinforcing steel shop drawings. Submit written statement from Special Inspector that no additional penetrations or openings were added to those shown in penetration submittal.
   C. Composite Concrete and Masonry Wall Penetration Submittal: Submit to Architect (Structural Engineer) for each wall indicating size and location of each wall penetration and opening as necessary by all affected trades. Submit penetration elevations together with corresponding reinforcing steel shop drawings. Submit written statement from Special Inspector that no additional penetrations or openings were added to those shown in penetration submittal.

8. Contract Documents Use: Review Contract Documents in their entirety before performing structural related Work and before developing shop drawings. Bring discrepancies to immediate attention of Architect (Structural Engineer) before starting Work.

   A. Scaling of Drawings: Not permitted.
   B. Additional Structural Requirements: See specifications.
   C. Building Geometry: See architectural drawings for building geometry including, but not limited to, top of floor and roof elevations; depressions; slopes; curbs; drains; trenches; slab and deck edge locations; wall overall dimensions; and size and locations of openings in floors, roof, and walls.
   D. Non-structural Items Requiring Special Provisions: See architectural, mechanical, plumbing, and electrical drawings for non-structural items requiring special provisions during construction. They include, but are not limited to, non-structural walls; size and locations of openings and sleeves penetrating structure; size and location of concrete curbs and pads; and size and location of piping, ductwork, and equipment anchorages mounted or suspended from structure. Verify exact size and location of equipment with equipment manufacturer.

9. Materials: Furnish and install in compliance with legally constituted public authorities having jurisdiction including county and local ordinances and safety orders of State Industrial Accident Commission, OHSA. The Architect (Structural Engineer) and Owner accept no responsibility for the contractors failure to comply with these requirements.
10. Penetrations, Embedments, and Openings in Structural Members: No penetration, embedment, opening, sleeve, pipe, or conduit shall occur in structural members including footings, slabs, walls, columns, and beams unless specifically shown or indicated on structural drawings.
11. Typical Details: Details on sheets indicated as typical are applicable throughout Project wherever the described condition occurs and may or may not be specifically referenced on structural drawings. Contractor is responsible for identifying these details and understanding extent of their application prior to performing Work. Details not shown or noted shall be similar to those shown for similar construction. Contractor shall submit RFI's for details such as this to Architect (Strucutral Engineer) prior to proceeding with work.

C. QUALITY ASSURANCE (STRUCTURAL OBSERVATION, MATERIALS TESTING, and SPECIAL INSPECTION)

1. Structural Observation:

   A. The Architect (Structural Engineer) of record will perform visual observation of the construction as required CAC 4-333 and 4-341 in accordance with the governing code. These visual observations shall not be considered a substitute for special inspections.
   B. Coordination Responsibilities of Contractor: Notify Architect (Structural Engineer) 48 hours in advance of critical stages of construction indicated below so visits may be scheduled by Structural Observer. Failure by Contractor to meet observation schedule may require removal of subsequent Work for observation. Contractor to bear costs of removal and replacement of finished Work or framing damaged by removal process or as required for corrective action and for any associated scheduling delays.
   C. Pre-construction Meeting: Owner may coordinate and call for meeting between Architect (Structural Engineer) responsible for structural design, Structural Observer, Contractor, affected subcontractors and Special Inspector. structural observer will preside over this meeting. Purpose of meeting is to identify major structural elements and connections that affect vertical and lateral load resisting systems of structure and to review schedule of Structural Observation, Materials Testing, and Special Inspection of Project.

2. Mill Test Reports Certifying Materials: Contractor to submit mill test reports certifying reinforcing steel, and structural steel are of identifiable tested stock to Owner, Special Inspector, Architect (Structural Engineer) and, upon request, to Governing Code Authority. Ensure materials are properly tagged for identification. If mill test reports cannot be made available or if material cannot be identified, Testing Laboratory will perform tests as directed by Architect (Structural Engineer). Contractor shall pay Testing Laboratory for costs related to tests and inspections of unidentifiable materials or materials furnished without mill test reports, materials found deficient after initial tests and inspections, or materials replacing deficient materials.

   A. Ultrasonic Examination of Heavy Rolled Shapes and Thick Plates at Proposed Welded Moment Connections: Where complete penetration groove welds occur at Groups 4 and 5 structural steel shapes, as defined in ASTM A6, and plates exceeding 2 inches thick, submit mill test reports to Architect (Structural Engineer) and, upon request, to Governing Code Authority. Mill test reports shall certify that Charpy V-notch testing was conducted in compliance with ASTM A6, Supplementary Requirement S5, including impact test complying with ASTM A673 at frequency P with minimum average value of 20 ft.-lbs. absorbed energy at 70 degrees Fahrenheit.

3. Weld Testing and Inspection: Testing Laboratory will submit weld test results to Owner, Contractor, Architect (Structural Engineer) and to Governing Code Authority. See Specifications for testing requirements not indicated on structural drawings.

   A. Structural Steel Welding: Apart from visual inspection and review of fabrication and erection reports of fabricator/erector's own quality control testing and inspection, Owner's Testing Laboratory will perform indicated shop and field inspection and testing. Testing Laboratory will be AWS Q.C.-1 certified and will provide inspectors for continuous inspection of steel fabrication and erection and structural welding. Shop and field testing of materials and welding will be as follows:

      a. Ultrasonic testing is required for all (100%) partial and complete penetration welds. Test groove welding on continuity plates by ultrasonic testing after beam flange weld connection. Testing will be performed 24 hours or more after completion of welding. Weld backing removal areas and fillet welds will be subjected to magnetic particle examination.
      b. Base metal thicker than 1-1/2 inches, subjected to through thickness weld shrinkage, will be ultrasonically tested directly behind such welds 48 hours or more after completion of welding.
      c. Welds shall be visually inspected and periodically measured (15 percent minimum).
      d. Check 10 percent of fillet welds by magnetic particle (ASTM 109 method). Check 25 percent of continuity plate fillet welds and beam fillet welds (100 percent in moment zones) by magnetic particle.
      e. Ultrasonically test column flanges located at proposed welded moment connections, continuity plates, doubler plates and base plates where column flange or plate thickness exceeds 1-1/2 inches. Test for evidence of laminations, inclusions or other discontinuities in accordance with ASTM A435, straight beam ultrasonic examination of steel plates, or ASTM A898, straight beam ultrasonic examination of rolled steel structural shapes, as applicable. Test zone to include area 6 inches above and below each beam flange connection. For plates, any discontinuity causing a total loss of back reflection not contained within 3-inch diameter circle, or one-half thickness of plate, whichever is greater, will be rejected. For rolled shapes, ASTM A898, Level I criteria applies. Testing will be performed on material prior to fabrication, after fabrication, and after final welding of beam.
      f. Amperage, voltage, polarity and electrode stick out will be verified for compliance with electrode manufacturer's recommendations.

4. Special Inspection: Per DSA-103 and chapter 17A of CBC.

D. EARTHWORK and FOUNDATIONS

1. Geotechnical Report: Perform soils work complying with foundation design based on recommendations in report log no. 13012.01P; prepared by Wallace Kuhl & Associates; dated February 17, 2021 and subsequent addenda letters dated June 12, 2021 and August 11, 2021. Maintain at site a copy of report and addenda.

2. Allowable Foundation Design Values per Geotechnical Report.
   A. Bearing Capacity: 2,000psf, for min. 2'-0" wide spread footing and 1'-0" wide continuous footings both with 1'-6" min. depth. Bearing values may be increased 33% for transient loading.
   B. Passive Lateral Bearing Pressure: 250 psf/ft
   C. Coefficient of Friction: 0.25

3. Grading, Excavations, Backfill and Compaction of Backfill: Comply with Geotechnical Report and requirements of Governing Code Authority and performed only under Continuous Special Inspection of geotechnical engineer.

4. Preparation of Soil Under Foundations, Retaining and other Site Walls and Building Slabs on Grade:

   A. Excavation: Building pads shall be over excavated per figure below as recommended in Geotechnical Report. If soft pockets are discovered during over excavation, additional over excavation will be required as directed by the Geotechnical Engineer.
   B. Scarification: Following geotechnical engineer's observation of excavation, scarify soil at excavation bottom to a depth of at least 12 inches, moisten to 2% above optimum moisture content, and recompact scarified soil to a minimum 90% of the laboratory maximum dry density as determined by ASTM Test Method D1557.
   C. Approved Compacted Fill: Excavated artificial fill from site or imported fill, both properly moisture conditioned, may be used for compacted fill subject to geotechnical engineer's approval. (EI< 20) Place compacted fill in thin lifts as determined by geotechnical engineer. Refer to Geotechnical Report for compaction requirements.
   D. Compact to at least 90% below building foot print and 95% out side building foot print of the laboratory maximum dry density as determined by ASTM Test Method D1557.

5. Foundation Excavations: Foundations are to bear on approved compacted fill as indicated in Geotechnical Report. Excavations are to be inspected by geotechnical engineer prior to placement of reinforcing steel and formwork. Ensure excavations are clean, dry and free of debris or loose soil. Slope sides of excavation not less than minimum slope indicated in Geotechnical Report. Cast concrete directly against excavated surfaces. Graphic presentation of extent of excavation below is based on Geotechnical Report. In case of discrepancy, information in Geotechnical Report shall take precedence.

6. Backfilling of Retaining Walls: Place after completion and inspection of waterproofing. Adequately shore retaining walls during backfill operation. Unless adequately shored, do not place backfill behind building structure retaining walls until concrete at elevated floor levels adjacent to walls are completely poured and have cured for at least 7 days at site walls, concrete shall reach full design strength prior to backfilling unless adequately shored.

7. 7. Retaining walls to be designed for the following equivalent fluid pressure: (fully drained - no hydrostatic pressure) — 50H (unrestrained); 70H (fixed at top); + 20H (for 2H:1V sloping backfill)

8. See AQ1.0 for requirements at swimming pool design.

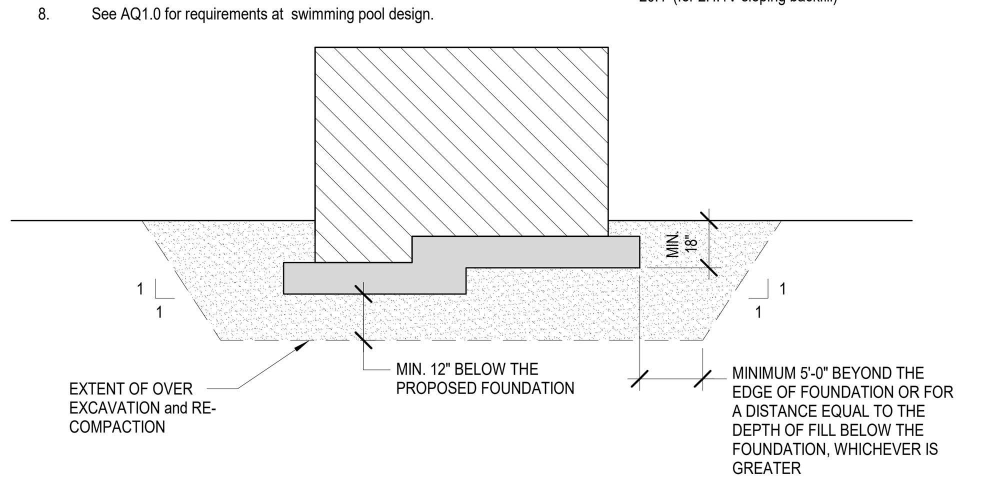

E. REINFORCING STEEL

1. Reinforcing Steel: All bars shall be deformed.

   A. All bars unless indicated otherwise: ASTM A615, Grade 60
   B. Bars to be welded: ASTM A706, Grade 60
   C. Additional Requirements for Bars, Excluding Ties, for vertical bars in Shear Walls: No additional requirements if ASTM A706, Grade 60 bars used. ASTM A615, Grade 60 bars are permitted provided actual yield strength based on mill tests does not exceed specified yield strength by more than 18,000 psi (retests shall not exceed this value by more than an additional 3,000 psi) and ratio of actual ultimate tensile stress to actual yield stress is not less than 1.25.

2. Wire and Spiral Reinforcing:

   A. Smooth welded wire fabric (W.W.F.): ASTM A1064, Fy =65 ksi, flat sheets only - do not use rolled mesh. Lap 1-1/2 wire spaces (1 foot minimum). Offset laps in adjacent sheets to avoid continuous laps.
   B. Deformed wire stirrups (D4 and larger only): ASTM A1064, Fy =65 ksi
   C. Spiral reinforcing: ASTM A1064, Fy =65 ksi

3. Reinforcing shall be placed in accordance with the American Concrete Institute Standard 318 (ACI318) and Concrete Reinforcing Steel Institute's (CRSI) "Manual of standard practice". Reinforcing shall be kept clean and free of rust.

4. Provide all accessories needed to support reinforcing in the positions shown in the drawings. Chairs and spacers for reinforcing shall be non-ferrous of plastic coated when resting on exposed concrete surfaces.

5. Shop Drawings: ACI 315, Part B. Show reinforcing steel placement including sizes, quantities, spacing, clearances, splice locations, lap lengths, and concrete coverage's and submit to Architect (Structural Engineer). Promptly notify Architect (Structural Engineer) prior to developing shop drawings if insufficient clear distances between reinforcing steel and other congestion is encountered. Notify Special Inspector of adjustments made from approved Contract Documents which are indicated on accepted shop drawings that facilitate field placement of reinforcing steel and concrete. All bars shall be marked so that they can easily be identified by the project inspector after installation.

6. Lap Splices: Provide Class B splices unless indicated otherwise. Splice bars only at locations indicated. If additional splice locations are proposed, promptly notify Architect (Structural Engineer) prior to developing shop drawings.

   A. Splices in Walls: Locate splices in horizontal bars at well-staggered locations. Do not splice vertical bars except at horizontal supports such as floor and roof diaphragms.

7. Mechanical Splice: Mechanical couplers shall have current ICC report and shall have the capacity to develop 160 percent of the yield strength of the spliced bars.

8. Minimum Clearances Between Parallel Reinforcing Steel Including Distance Between Sets of Spliced Bars: 1 inch, 1 bar diameter, or 4/3 times the minimum aggregate size whichever is greater. 1-1/2 inches, 1-1/2 bar diameters, or 4/3 times the minimum aggregate size whichever is greater, at columns, piers, and pilasters only. For bundled bars, minimum clear distances between units of bundled bars shall be same as single bars except bar diameter is derived from equivalent total area of bundle.

9. Minimum Concrete Coverage: Place bars as near to concrete surface as the following minimum coverages permit, unless noted otherwise:

   A. Slabs on Grade - locate at center of slab.
   B. Slabs Supporting Earth Above - 1-1/2 inches from top.
   C. Formed Concrete Exposed to Earth or Weather - 1-1/2 inches (#5 and smaller); 2 inches (#6 and larger)
   D. Concrete Poured Against Earth (Unformed) - 3 inches
   E. Walls Above Grade, Exposed to Weather - See C. above
   F. Walls Above Grade, Not Exposed to Weather 3/4 inch (#11 and smaller); 1-1/2 inches (#14 and larger)
   G. Columns (Clear to Face of Ties) - 1-1/2 inches
   H. Beams (Clear to Face of Ties) - 1-1/2 inches
   I. Structural Slabs (Top and Bottom) - 1 inch

10. Dowels between footings and vertical wall & column bars shall match the size, grade and spacing of the column up wall vertical reinforcing and be lapped with a class B lap splice, UNO.

11. Dowels at Construction Joints: Provide dowels matching size and quantity of reinforcing steel interrupted at construction joints, unless detailed otherwise.

12. Placement of Bars in Walls (unless detailed otherwise): Place vertical bars closest to wall surfaces at curtains containing vertical and horizontal bars of the same size. In curtains which vertical and horizontal bars are of different sizes or spacing, place layer with most steel area closest to near wall surface.

13. Bars Terminating at Walls, Columns, Beams, and Foundations: Extend bars to within 2 inches (3 inches at concrete poured against earth) of far face of wall, column, beam, or foundation and provide standard hook unless detailed otherwise.

14. Bars Interrupted by Structural Steel: Extend bars to within 2 inches of steel face and provide standard hook unless detailed otherwise.

15. Welding: AWS D1.4, edition adopted by applicable code.

   A. Acceptable Reinforcing Steel for Welding: ASTM A706. If welding of reinforcing steel other than A706 is desired, submit proposed procedure, indicating conformance to Applicable Code and requirements of Governing Code Authority, to Architect (Structural Engineer) for acceptance and to Governing Code Authority for approval prior to execution.
   B. Rebar to rebar weld not allowed except where specifically indicated on plans. Provide electrode E80XX (80 ksi) where permitted.
   C. Welder Certification: As required by Governing Code Authority.
   D. See welding notes in Structural Steel Section of these notes for additional requirements.

16. Bending: Bend cold unless otherwise accepted by Architect (Structural Engineer). Do not field-bend reinforcing steel bars embedded in concrete unless otherwise accepted in writing by Architect (Structural Engineer).

17. Reinforcing Steel Allowance: In addition to reinforcing steel indicated in Contract Documents, allow for an additional 2 tons of reinforcing steel to be constructed under direction of Architect (Structural Engineer) during construction. Direction will be given during multiple occasions. Reinforcing steel under this allowance will be of any size, shape and grade. Quantity of pieces and location in Project will vary. Include in this allowance fabrication and erection and necessary construction services such as shop drawing preparation, and access for inspection. Submit expenditures in writing for any part of this allowance to Architect (Structural Engineer) prior to fabrication and erection. The unused portion of this allowance shall be credited to the owner at the completion of the project.

18. Fusion welded preassembled cages are not permitted.

F. CAST-IN-PLACE CONCRETE

1. Applicable Standards: ACI 318 and ACI 301 except as amended in California Building Code Chapter 19A (for DSA & OSHPD) and as modified by supplemental requirements herein. Concrete mixing shall comply with ASTM C94.

2. Portland Cement: ASTM C150, type II. Submit mill test with certification of compliance to Architect (Structural Engineer)

3. Aggregates:

   A. Normal Weight Concrete Aggregate: ASTM C33 for aggregates of natural sand and rock. Maximum aggregate size is 1-1/2 inches at foundations and slabs on grade and 1 inch elsewhere.
   B. Light Weight Aggregate for Structural Concrete: ASTM C330, expanded shale light weight aggregate.

4. Minimum 28-Day Concrete Compressive Strengths and Types:

Location in Structure	Compressive Strength and Type of Concrete	Max. W/C Ratio
Concrete Unless Otherwise Indicated on Structural Drawings	4000 psi normal weight (145 pcf)	0.5
Footings and Grade Beams	4000 psi normal weight (145 pcf)	0.5
Concrete Slabs on Grade	3000 psi normal weight (145 pcf)	0.45

5. Slump: Per ACI 301, CH. 4 and CBC section 1704A.3.

6. All concrete above grade, including, slab on grade, deck fill, wall, topping slab, stair landing and tread shall have 1.5 pounds of 1 1/2" long fibrous reinforcing per cubic yard of concrete.

7. Lean Concrete: Where specifically indicated, containing 2 sacks of cement per cubic yard of concrete. Use only where specifically called for.

8. Non-shrink Grout: ASTM C109, cementitious, non-metallic attaining a compressive strength of 8000 psi.

9. Concrete Mix Design Submittal: Prior to ordering concrete, submit for each compressive strength and type of concrete required designed, signed, and sealed by a registered Civil or Structural Engineer in State of California to Architect (Structural Engineer), Special Inspector and to Governing Code Authority complying with California Building Code, Chapter 19A.

10. Construction Joint: Roughen surface to 1/4-inch amplitude. Clean, remove laitance, thoroughly wet and remove standing water before placing new concrete. Submit to Architect (Structural Engineer) at least 14 days prior to placing concrete indicating locations of construction joints and extent of pours. Place joints at locations to minimize effects of shrinkage as well as being placed at points which least impair strength of structure. Provide dowels as directed.

11. Embedments and Penetrations in Concrete: No penetration through structural concrete is permitted unless shown in these drawings or specifically accepted in writing by Architect (Structural Engineer). Do not cut any reinforcing.

   A. Pipes, Sleeves, Conduits, and Ducts: Not permitted embedded or penetrating concrete spread footings, columns, walls or concrete cast over metal decking, except as shown in these drawings.
   B. Conduits Embedded in Structural Concrete Slabs: Not permitted unless limited to two layers of 1 inch, and 1/6 slab thickness. outside diameter conduits and smaller spaced at least 3 inches center to center and within middle third of slab thickness. No conduit embedded in concrete cast over metal decking is permitted. No aluminum conduit is permitted.

12. Chamfered Corners: Provide 3/4-inch chamfer at exposed corners of columns, beams and walls except where structural walls are laid flush with column or beam faces, unless detailed otherwise.

13. Curing: Maintain concrete above 50 degrees Fahrenheit and in a moist condition for a minimum of 7 days after placement unless otherwise accepted by Architect (Structural Engineer).

14. No more than one class of concrete shall be on site at one time.

15. The maximum size for a single elevated concrete slab pour shall be 25,000 sq. ft. and shall have a maximum length to depth ratio of 2:1.

16. The maximum water-soluble chloride ION (CI) content in concrete by percentage of weight cement is 0.30.

G. PROPRIETARY ANCHORAGES and FASTENERS

1. Anchorages:
   A. Drill and Epoxy Anchors:
      i. At Concrete: Hilti HIT-RE 500 V3 adhesive anchor system complying with ICC-ES Evaluation Report ESR-3814.
      ii. At Masonry: Hilti HIT-HY 270 adhesive anchor system complying with ICC-ES Evaluation Report ESR-4143.
      iii. Provide anchor type, size and embedment as indicated in details.
      iv. Overhead applications must be installed using the Hilti HIT-SZ piston plug system.
   B. Mechanical Anchors:
      i. At Concrete: Hilti KB-TZ2 carbon steel expansion anchor complying with ICC-ES Evaluation Report ESR-4266.
      ii. At Masonry: Hilti KB-TZ2 carbon steel expansion anchor complying with ICC-ES Evaluation Report ESR-4561.
      iii. Where mechanical anchor is exposed to weather or as specifically noted on plans, provide stainless steel anchor conforming to the ICC-ES Evaluation Report in lieu of carbon steel. steel.
   C. Welded Shear Studs: Nelson S3L flux filled, headed stud anchors, 65,000 psi minimum ultimate tensile strength conforming to ASTM A29, automatically end welded in field and complying with ICC-ES Evaluation Report ESR-2856.
   D. Welded Deformed Anchors: Nelson D2L, cold rolled, deformed steel reinforcing bars conforming to ASTM A1064 and complying with ICC-ES Evaluation Report ESR-2907.
2. Fasteners:

   A. Powder Actuated Fasteners: Hilti Low-velocity Powder Actuated Drive, 0.157" diameter (X-U), complying with ICC-ES Report ESR-2269. Provide appropriate washer between fastener head and light gauge metal or wood surface. Shot pins shall not be used @ PT slab or beams.
   B. Self-Drilling Metal Screws (Indicated "Screws" or "SMS" on Drawings): Hilti Self Drilling Screw complying with current ICC-ES Evaluation Report ESR-2196.
   C. Concrete Screws: Hilti KH-EZ carbon steel screw anchor complying with ICC ES Evaluation Report ESR-3027.
   D. Masonry Screws: Hilti KH-EZ carbon steel screw anchor complying with ICC ES Evaluation Report ESR-3056. Simpson Titen HD carbon screw anchor complying with ICC ES Evaluation Report ESR-1056
   E. Where Concrete or Masory Screws are exposed to weather, provide stainless steel anchors conforming to the ICC-ES Evaluation Report in lieu of carbon steel.

3. Installation: See manufacturer's written instructions and referenced ICC-ES evaluation report. Contractor shall arrange an anchor manfacturer's representative to provide onsite installation training for all anchor products specified.

   A. Prior to drilling holes for post-installed anchors, contractor shall located existing rebar, prestressing tendons, post-tensioning tendons, and embedded utilities using non-hazardous, non-destructive methods with accurate location tolerances (plus or minus 1/4-inch). Do not cut, hit, or otherwise damage existing rebar or tendons during anchor installation.
   B. Drilling Holes in Existing Concrete or Masonry for Anchorages: Use non-pneumatic, rotary hammer tools with ANSI compliant non-rebar cutting drill bits to drill holes of proper tolerances.Holes shall be thoroughly cleaned per manufacturer's written recommendations prior to installation of anchorages.
   C. Deleterious Materials: Keep anchorages, including holes for drill and epoxy anchors and mechanical anchors, free of dust, grease, and other materials that impair bond.
   D. Use of diamond core bit with roughening tool for anchor holes requires approval from Engineer of Record prior to drilling. Unless otherwise shown in the drawings, all holes shall be drilled perpendicular to the concrete surface.
   E. The effective embedment depth for the post-installed anchors shall be as noted on the details. For expansion anchors, refer to applicable evaluation report for the corresponding minimum hole depth and nominal embedments.
   F. Holes are assumed to be dry unless otherwise noted on plans.
   G. Anchor installer certification is required for all installers of drill and epoxy anchors in horizontal or upwardly inclided orientation. Installer qualification must be provided to the inspector prior to installation.
   H. Installation Torques for Expansion Anchors shall be as noted:

Nominal Anchor Diameter	Expansion Anchor Installation Torque (ft-lb)			
	Into Concrete		Into Masonry	
	KB-TZ2 Carbon Steel	KB-TZ2 Stainless Steel	KB-TZ2 Carbon Steel	KB-TZ2 Stainless Steel
1/4"	4	6	4	6
3/8"	30	30	15	15
1/2"	50	40	25	25
5/8"	40	60	30	35
3/4"	110	125	50	50

   I. Installation Torques for Screw Anchors shall be as noted:

Nominal Anchor Diameter	Screw Anchor Installation Torque (ft-lb)					
	Into Concrete				Into Masonry	
	Hilti KH-EZ Hex	Hilti KH-EZ C	Hilti KH-EZ CRC	Hilti KH-EZ E & KH-EZ I	Hilti KH-EZ (Hex, P, PM, PL & C)	Hilti KH-EZ CRC
1/4"	18		N/A	18	21	N/A
3/8"	40 (19 @ h_{nom} <2.5")		40	40	22	20
1/2"	45	N/A	45	N/A	34	25
5/8"	85	N/A	85	N/A	38	35
3/4"	95	N/A	85	N/A	70	45

Note: 1/4" dia. Hilti KH-EZ P, PM & PL in concrete shall have installation torque of 18 ft-lb.

4. Testing
   A. See DSA 103 Testing and Inspections.
   B. Installation in Concrete:
      i. Provide testing of post-installed anchors in concrete per CBC 2019 1910A.5. [1909.2.7 FOR DSA SS/CC]
   C. Installation in Masonry:
      i. Provide testing of post-installed anchors in masonry per CBC 2019 1910A.5 as required by section 1705A.4.

H. STRUCTURAL STEEL

1. Detailing, Fabrication, and Erection: AISC 360-10 "Specification for Structural Steel Buildings" and AISC 341-10 "Seismic Provisions for Structural Steel Buildings" except as amended in Applicable Code Chapter 22A and as modified by supplemental requirements herein.

2. Structural Steel: Provide readily identifiable structural steel in compliance with Applicable Code Section 2203A.1. Furnish structural steel complying with the following ASTM standard specifications, unless noted otherwise:

   A. Structural Steel Unless Indicated Otherwise: ASTM A992, Grade 50
   B. Angles and Channels: ASTM A36
   C. Plates: ASTM A572, Grade 50
   D. Pipes: ASTM A53, Grade B (35 ksi)
   E. Rectangular Tubes: ASTM A500, Grade C (50 ksi)
   F. Anchor Bolts: ASTM F1554, grade 55 (weldable)

3. Holes for Bolted Connections and Anchor Bolts: AISC "standard" holes limited to 1/16-inch larger in diameter than nominal bolt diameter, unless noted otherwise. See Note 9, for oversized holes for anchor bolts in base plates.

4. High Strength Bolts, Nuts and Washers: AISC "Specification for Structural Joints Using High-Strength Bolts."

   A. Hardened Washers: ASTM F436, under nuts except where plate washers are used. Provide beveled washers where joint face slope is greater than 1:20.
   B. Tightening: Snug tight for all high strength bolts except tighten A325-SC and A490-SC bolts to at least the minimum proper tension according to AISC Specification.
   C. All bolts parts of "SFRS" shall be "SC" type bolts.

5. Welding:

   A. Applicable Welding Standard: Applicable Code and latest adopted edition of AWS D1.1 including, but not limited to, the following:
      a. Section 6.4 for qualified welders.
      b. Section 4.2 and AISC 360-10 Specification Section M2-2 for jumbo sections for preheat and interpass temperature requirements.
      c. Section 5 for arc welding.
      d. Section 6 for inspection.
   B. Pre-qualified and Non Pre-qualified Welds: Welds shall be pre-qualified in compliance with Applicable Welding Standard. Where non pre-qualified welds are to be used, qualify by test and procedure qualification test record complying with Applicable Welding Standard.
   C. Work performed by Welders and Inspectors: Adhere to approved Welding Procedure Specification (WPS). Each welder and inspector shall retain a copy of WPS.
   D. Pre-construction Meeting: Conduct to include Architect (Structural Engineer), fabricator, erector, Contractor and inspectors to discuss Welding Procedure Specification (WPS).
   E. Welding Procedure Specification (WPS): Fabricator/erector to develop WPS in compliance with Applicable Welding Standard. Submit to Architect (Structural Engineer) for acceptance and Governing Code Authority for approval prior to fabrication. WPS submittal to include the following:

      a. Welding manufacturers' specifications.
      b. Information required by Applicable Code, Contract Documents and any other information necessary to produce welds that are in compliance with Applicable Welding Standard.
      c. Detailed sequence of weld sketches addressing effects of welding heat for welds at joints and within seismic frame assemblies as a whole. Plan sequence of erection and welding to minimize locked in stresses and distortion considering effects of welding heat. Procedures submitted shall result in completed connections which comply with design intent of structural drawings. No deviation from structural drawings is permitted unless otherwise accepted by Architect (Structural Engineer) and approved by Governing Code Authority.
      d. Welding parameters recommended by electrode manufacturer.
      e. List of applicable base metal types and thicknesses.
      f. Welding joint sketches including joint type, weld type, joint geometry, and applicable dimensions. Individual weld passes shall be identified in sketches and numbered to identify the sequence of their deposition. Sketches shall identify the maximum layer thicknesses and bead widths. In no case shall layer thickness exceed 1/4-inch, nor shall maximum bead width exceed 5/8-inch.
      g. Applicable welding process.
      h. Position of welding.
      i. List of filler metal per Applicable Welding Standard and electrode specification and classification. Include details showing shielding material to be used.
      j. Minimum preheat requirements, interpass temperatures and post weld heat treatment. Minimum specified preheat shall meet requirements of AWS D1.1, table 3.2, and AISC 360-10 Section M2-2 requirements for jumbo sections.
      k. List of applicable electrical characteristics for process employed. Clearly indicate specific values required for each welding pass. These electrical characteristics shall include at a minimum the following:
         - Electrode diameter.
         - Type of current and acceptable ranges of current measured in amperage. For wire feed processes, indicate manufacturers' recommended melt-off rate, deposition rate, and wire feed speed.
         - Voltage (for all processes).
         - Actual field condition travel speed and manufacture's data for travel speed.
         - Electrode extension (stick out) for wire feed processes.
         - Amperage, voltage and electrode extension (as applicable) shall be within filler metal manufacturer's recommendations (compare to AWS D1.1, Section 3.6 and 3.7).
         - Electrode manufacturer's technical information, with identification number listed, and welding parameter recommendations.

   F. Welding Electrode (Filler Metal): E70xx (70 ksi) u.n.o., provide filler metal with Charpy V-notch toughness of 20 ft/lbs at -20 degrees Fahrenheit at complete penetration groove welds.
      a. Welds indicated as "Demand Critical" (DC) shall be per AISC 341 sections A3.4b and I2.3.

   G. Welding Toughness Requirements: Certify conformance to Charpy V-notch toughness requirements with tests by an independent testing laboratory for each AWS classification, manufacturer and trade name. Testing procedures shall be in accordance to Applicable Welding Standard and AWS D1.8

   H. Fabricators: Perform shop welds by fabricators approved by LA City or AISC.

      a. Welder Qualification: Welders, regardless if Work is performed in shop or in field, shall be qualified for the Work they will be doing and shall have certifications current and acceptable to Governing Code Authority.
      b. Special inspection shall be required for all welding, as required by governing code authority.

   I. Welds Exposed to View:

      a. Faces of fillet welds exposed to view shall have as-welded surfaces that are reasonably smooth and uniform. No finishing or grinding shall be required, except where clearances or fit of other items may so necessitate.
      b. Partial and full penetration welds exposed to view shall be ground smooth and flush with finish surface of steel. Remove backup bars and weld tabs. Fill holes with weld metal or body solder and smooth by grinding or filing.

   J. Groove Preparation: Clean groove preparation thermal cuts by grinding.
   K. Termination of Welds: Terminate at joint ends in a manner that ensures sound welds. Use extension bars and run-off tabs whenever necessary.
   L. Hand-held Calibrated Amp and Volt Meters: To be used by fabricator, erector and inspectors to assure proper amperage and voltage of welding process. Measure amperage and voltage at arc. Verify travel speed and electrode stick-out in compliance with electrode manufacturer's recommendations and with approved WPS.
   M. Storage of Electrodes: Adhere to Section 5.3 of AWS D1.1.
   N. Weld each flange of moment frame beam to column connections in one continuous process without cooling below pre-heat temperature.
   O. Welding of ASTM A913 and A706 Materials: Perform according to requirements of latest edition of AWS standard, structural drawings and specifications, whichever is more stringent.
   P. Minimum Fillet Weld Size: Where minimum fillet weld size, as stipulated by AISC Section J2 and Table J2.4, exceeds fillet weld size indicated on structural drawings, use AISC stipulated size.
   Q. Minimum Groove or Butt Weld Size: Provide complete penetration unless indicated otherwise.
   R. Weld Length: Length of welds shown are net effective lengths. Where length of weld is not indicated, provide weld full length of joint.

H. STRUCTURAL STEEL CONT'D

6. Shop Drawings: Submit To Architect (Structural Engineer) for review and, upon request, to Governing Code Authority. Include sequence of erection procedures from approved WPS:

7. Fabrication:

   A. Moment Connections: Orient flange stiffener plates and cap plates used in moment connections so that rolling direction of plate is parallel with direction of principal stress.
   B. Horizontal Members: Place natural camber up.
   C. Filler Plates: Provide at splices of parts having more than 1/8-inch difference in thickness. Filler plates to match grade of material spliced.

8. Cleaning: After fabrication, clean steel surfaces free of rust, loose mill scale, and oil.

9. Oversized Holes for Anchor Bolts in Base Plates: Where oversized holes occur, provide 3" square plate washers under nuts. Thickness of plate washer shall be 0.375 times diameter of anchor bolt. Provide weld washer to base plate with 1/4" fillet weld all around.

10. Exposure to Soil: Encase structural steel in lean concrete with 4-inches concrete cover where exposed to soil.

11. Exposure to Weather: All structural steel (including connection elements) exposed to weather shall be hot dipped galvanized. Coordinate finishes with architect at AESS. At welding on galvanized members, remove and repair galvanization as required.

12. Structural Steel Allowance: In addition to the steel shown or implied in this document, allow for an additional 2 tons of structural steel to be constructed at the direction of the Structural Engineer during construction. The allowed steel may be of any shape or sizes, including plates, wide flanges, tubes, pipes, channels, angles, and/or any other structural shapes. The number of pieces may vary. The locations of applications may vary. Direction may be given in multiple occasions during construction. The allowance should include all fabrication and construction related services, such as shop drawings, shop preparation, field erection and coordination, bolted connections and field welding. Expenditure of any part of this allowance shall be approved in writing by the Structural Engineer prior to any fabrication and erection.

13. Heavy Sections
   A. Heavy sections shall comply with AISC 360-16 Section A3.1c.
   B. Heavy sections forming part of the "SFRS" shall also comply with AISC 341-16 Section A3.3.

14. Welded Splices of heavy sections including Welds to Baseplates shall comply with AISC 360-16 Section J1.5.

15. See quality assurance note C.4 for non-destructive testing.

I. METAL DECKING

1. Metal Decking and Accessories: Verco Manufacturing Company, type and gauge as indicated on structural drawings, ASTM A653-SS grade 50 minimum conforming to IAPMO report ER-0217, G60 coating, unless heavier galvanized coating is indicated in specifications. Run deck units continuous over three or more spans where possible (minimum two spans), deck is designed for unshored construction, U.N.O. Provide vented deck where vapor impervious material occurs over concrete fill.

2. Deck Welding: AWS D1.3 using prequalified procedures.

   A. Qualification of Welders: Welders shall be experienced in welding light-gauge steel and using prequalified procedures. Erector shall establish welding procedure for arc spot welding of metal decking to structural steel, for each gauge of decking to be used. Prior to deck erection, each welder shall be qualified using this procedure and witnessed by Special Inspector. See California Building Code, Chapter 22A and 17A, for additional qualification requirements.

3. Shop Drawings: Submit to Architect (Structural Engineer) for review. Shop drawings shall include layout of deck, type of deck, methods of attachment, and all deck openings larger than 1'-0".

4. Limits to Non-Structural Items Suspended From Concrete Filled Metal Decking:

   A. Hangers supported by metal decking with structural concrete fill may be installed using ICC-ES approved anchorage systems. Limit hangers to supporting duct work 6 square feet in cross sectional area maximum, 3-inch diameter pipe maximum, and acoustical ceilings. Locate hangers two flutes apart when they occur on same deck span. Support larger duct work and piping for structural beams or columns as shown in typical details. Do not support utilities, ductwork, piping conduits, and etc. from metal deck without concrete . See typical details for hanger details.
   B. Hangers supported by metal decking without structural concrete fill may be used for 12"x16" max ducts, 1-1/2" diameter pipes or ceilings. The hangers may be attached w/ 3/8" round x 12" long bars located above and perpendicular to the deck flutes. Locate hangers two flutes apart when they occur in the same deck span.

5. Pre-punched Holes in Metal Decking and Accessories: Metal deck welding and installation of welded shear studs are not permitted through single layer sheets greater than 16 gauge, nor through double layer sheets greater than 18 gauge, nor through sheets with total galvanized coating thickness greater than 1.25 ounces per square foot. Provide pre-punched holes as necessary. Provide closure angle at all openings per typical details.

6. Excess Structural Concrete: Concrete filled metal decking and steel framing will deflect during placement of concrete. These deflections will require placement of concrete in excess of amount based on nominal dimensions in order to bring slab within tolerances of a horizontal plane. Provide excess concrete at no cost to Owner.

7. Deck shall be layed out such that low flutes land on each parallel support wherever possible. Provide filler deck accessory where low flutes do not align with parallel framing. Provide 2" minimum bearing at each support and 2" lap at ends of decking panels.

8. Composite slabs:

   A. See "Proprietary Anchorage and Fasteners" notes for welded headed studs.
   B. Stud welding, inspection and testing shall conform to AWS D1.1, CH. 7.
   C. 18 gage or thicker decking shall not be lapped where welded studs are attached through decking.

J. MASONRY

1. Specified Compressive Strength of Masonry (f'm): 2000 psi typical unless noted otherwise.

2. Verifying Specified Compressive Strength of Masonry (f'm): Use masonry prism testing method unless otherwise acceptable to Architect (Structural Engineer). Full allowable stresses are used in design. Submit masonry prism data for each type and compressive strength of masonry required, with a professional engineer's signature and state of California seal, to Architect (Structural Engineer). Compliance with minimum required compressive strength shall be based on Applicable Code Section 2105A.2.

3. Concrete Block: ASTM C90, medium weight, attaining a minimum compressive strength as required to meet specified compressive strength of masonry (f'm).

4. Portland Cement for Mortar and Grout: ASTM C150, type I or II. Use of masonry cement or plastic cement is not permitted.

5. Aggregates for Mortar and Grout:

   A. Aggregates for Mortar: ASTM C144.
   B. Aggregates for Grout: C404, coarse type.

6. Mortar: ASTM C270, Type S.

7. Grout: ASTM C476, coarse type, attaining a minimum compressive strength as required to meet specified compressive strength of masonry (f'm). However, in no case shall grout compressive strength be less than 2000 psi at 28 days.

8. Reinforcing Steel: Reinforcing steel section of general notes unless indicated otherwise.

9. Composite Masonry Wall Penetration Submittal: Submit for each wall indicating size and location of each wall penetration and opening as necessary by affected trades. Submit together with appropriate reinforcing steel shop drawings. Submit written statement from Special Inspector that no additional penetrations or openings were added to those shown in penetration submittal.

10. Reinforcing Steel Splices: Lap reinforcing steel at splices a minimum of 72 bar diameters, except dowels in footings at base of walls shall splice a minimum of 72 bar diameters, unless noted otherwise. Where minimum clear distance between bars at adjacent splices is 3 inches or less, increase lap length 30 percent unless splices are staggered at least 24 bar diameters.

11. Dowels for Walls, Columns, Pilasters, and Piers: Match size and spacing of vertical reinforcing steel, unless noted otherwise. Set dowels to align with cells containing reinforcing steel.

12. Minimum Reinforcing Steel Clearances:

   A. Minimum Clearances Between Reinforcing and Outside Face of Masonry: 2 inches except in no case shall clearance be less than 2-1/2 bar diameters.
   B. Minimum Clearance Between Reinforcing and Inside Face of Grout Cell: 1/2 inch or 1 bar diameter whichever is greater.
   C. Minimum Clearance Distances Between Parallel Reinforcing: 1 inch or nominal bar diameter, whichever is greater. Increase to 1-1/2 inches or 1-1/2 times nominal bar diameter, whichever is greater, at columns, pilasters, and piers only.

13. Placement: Set courses in running bond pattern unless indicated otherwise. Set cells in vertical alignment. Provide flush mortar joints at surfaces to receive waterproofing or damp-proofing.

14. Grouting: Grout solid all cells. Mechanically vibrate grout in cells.

   A. Grout Height Limits: CBC Section 2104A.1.3.2.2 for low lift, DSA 1R-21-2.13 for high lift
   B. Horizontal Construction Joints: Hold grout 1 1/2 inches below top of masonry unit if work is stopped one hour longer.
   C. Grout Cover Around Reinforcing Steel, Anchor Bolts and Inserts Penetrating Masonry Shell: 1 inch minimum.

15. Horizontal Bars Terminating at Wall Ends and Opening Jambs: Extend bars to within 2 inches of end of wall and provide standard ACI 180-degree hook unless detailed otherwise.

16. Control joints shall be provided as indicated on Arch'l and detail 1/S6.61. If not indicated on Arch'l, provide control joints at 25'-0" o/c maximum and coordinate w/ Arch'l.

[redacted]

IDENTIFICATION STAMP
DIV. OF THE STATE ARCHITECT
APP: 02-119490 INC:
REVIEWED FOR
SS ☑ FLS ☑ ACS ☑
DATE: 09/13/2022

INTERIORS
PLANNING

916-287-2400 Office
916-287-2401 Fax
LPADesignStudios.com
431 I Street,
Suite 107
Sacramento, California 95814

REGISTERED PROFESSIONAL ENGINEER
DANIEL S. WANG
No. S4453
Exp. 12/31/22
STRUCTURAL
STATE OF CALIFORNIA

This document and all other project documents, ideas, aesthetics and designs incorporated therein are instruments of service. All project documents are copyright protected, are the property of LPA, Inc. (LPA) and cannot be lawfully used in whole or in part for any project or purpose except as set forth in the contractual agreement between LPA and its Client. The unauthorized disclosure and/or use of the project documents (including the creation of derivative works), may give rise to liability for copyright infringement, unlawful disclosure, use or misappropriation of property rights held by LPA. The unauthorized use of the project documents will give rise to the recovery of monetary losses and damages including attorney fees and costs for which the unauthorized user will be held liable.
Project documents describe the design intent of the work and are not a representation of as-built or existing conditions. LPA is not responsible for any discrepancies between the project documents and the existing conditions.

© LPA, Inc.

DAVIS SR HIGH SCHOOL AQUATICS CENTER

315 W 14TH ST., DAVIS, CA 95616

Developed for
DAVIS JOINT UNIFIED SCHOOL DISTRICT

Revision	Date

Submittal	Date
50% DD REVIEW	06/15/2021
100% DD SUBMITTAL	07/26/2021
50% CD REVIEW	10/08/2021
100% CD DSA SUBMITTAL	10/22/2021

Job Number	1904413
Date Published	06/15/2021
Checked By	DW
Scale	As indicated

GENERAL NOTES

S0.01

NOTES:
1. CONCRETE F'c = 4000 AT 28 DAYS.
2. Item is not considered a school building and is exempt and not part of DSA approval.

HEIGHT	CAISSON DEPTH	DIA.
30'-0" MAX.	6'-0"	24"

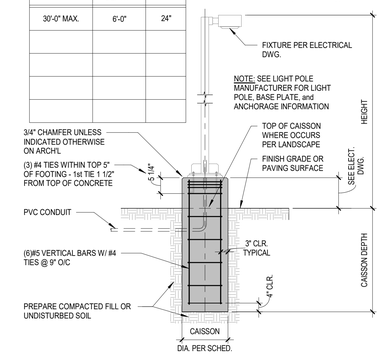

TYP. SITE LIGHT POLE DETAIL | 04

SCHEDULE			
HEIGHT "H"	WIDTH "W"	CMU WALL THICKNESS	VERTICAL REINF.
11'-0"	5'-0"	8"	#6 @ 16" AT CL

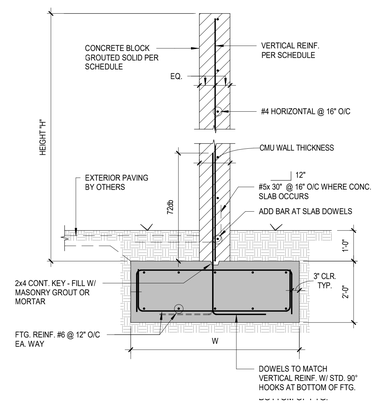

TYP. MASONRY FREE STANDING WALL | 02

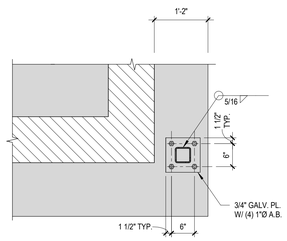

SECTION A-A

NOTE:
EPOXY BOLTS MAY BE USED IN LIEU OF CAST IN PLACE ANCHORS, SEE GENL NOTES FOR EPOXY INFO. SCAN FOR REINFORCING BEFORE DRILLING. DRILLING INTO REINFORCING IS NOT ACCEPTABLE

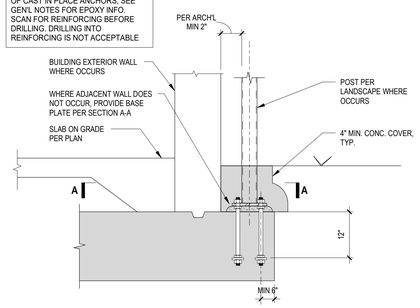

FENCE AND GATE ADJACENT TO BUILDING FOOTING WALL OR AT THE END OF A BUILDING FOOTING

TYP. FENCE POST NEXT TO BUILDING | 07

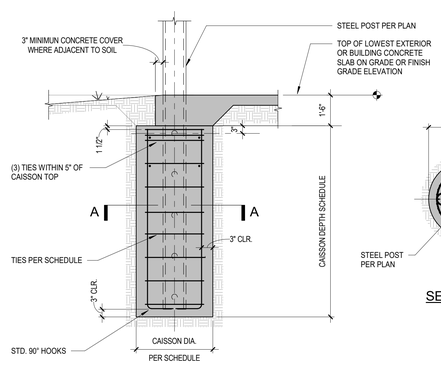

CAISSON DETAIL

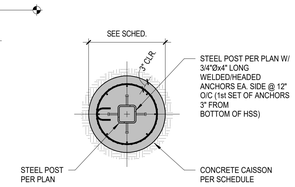

SECTION A-A

CAISSON SCHEDULE							
DESIGNATION	POST PER PLAN	CAISSON				LOCATION	NOTES / REFERENCE
		DIA.	DEPTH	VERTICAL BARS "Bv"	TIES		
1A	CHAINLINK FENCE	18"	5'-0"	N/A	#4@ 16" O/C	CHAINLINK FENCE (H=8'-0" MAX.) - SEE 01/L5.04	
1B	CHAINLINK FENCE GATE	18"	5'-0"	N/A	#4@ 16" O/C	CHAIN LINK FENCE GATE (H=8'-0" MAX.) - SEE 02/L5.04	
1C	CMU STORAGE GATE	18"	6'-0"	N/A	#4@ 16" O/C	CMU STORAGE YARD GATE (H=9'-0" MAX.) - SEE 02/L5.02	
1D	PICKET FENCE	18"	5'-6"	N/A	#4@ 16" O/C	PICKET FENCE (H=9'-6" MAX.) - SEE 01/L5.03	
1E	PICKET FENCE GATE	18"	5'-6"	N/A	#4@ 16" O/C	PICKET FENCE GATE (H=9'-6" MAX.) - SEE 03/L5.03	

TYP. CAISSON SCHED. and DETAIL | 01

IDENTIFICATION STAMP
DIV. OF THE STATE ARCHITECT
APP: 02-119490 INC:
REVIEWED FOR
SS ☑ FLS ☑ ACS ☑
DATE: 09/13/2022

INTERIORS
PLANNING

916-287-2400 Office
916-287-2401 Fax
LPADesignStudios.com
431 I Street,
Suite 107
Sacramento, California 95814

REGISTERED PROFESSIONAL ENGINEER
DANIEL S. WALTER
No. S4833
Exp. 12/31/22
STRUCTURAL
STATE OF CALIFORNIA

This document and all other project documents, ideas, aesthetics and designs incorporated therein are instruments of service. All project documents are copyright protected, are the property of LPA, Inc. (LPA) and cannot be lawfully used in whole or in part for any project or purpose except as set forth in the contractual agreement between LPA and its Client. The unauthorized disclosure and/or use of the project documents (including the creation of derivative works), may give rise to liability for copyright infringement, unlawful disclosure, use or misappropriation of property rights held by LPA. The unauthorized use of the project documents will give rise to the recovery of monetary losses and damages including attorney fees and costs for which the unauthorized user will be held liable.
Project documents describe the design intent of the work and are not a representation of as-built or existing conditions. LPA is not responsible for any discrepancies between the project documents and the existing conditions.

© LPA, Inc.

DAVIS SR HIGH SCHOOL AQUATICS CENTER

315 W 14TH ST., DAVIS, CA 95616

Developed for
DAVIS JOINT UNIFIED SCHOOL DISTRICT

Revision	Date

Submittal	Date
50% DD REVIEW	06/15/2021
100% DD SUBMITTAL	07/26/2021
50% CD REVIEW	10/08/2021
100% CD DSA SUBMITTAL	10/22/2021

Job Number	1904413
Date Published	06/15/2021
Checked By	Checker
Scale	As indicated

TYPICAL SITE DETAILS

S1.01

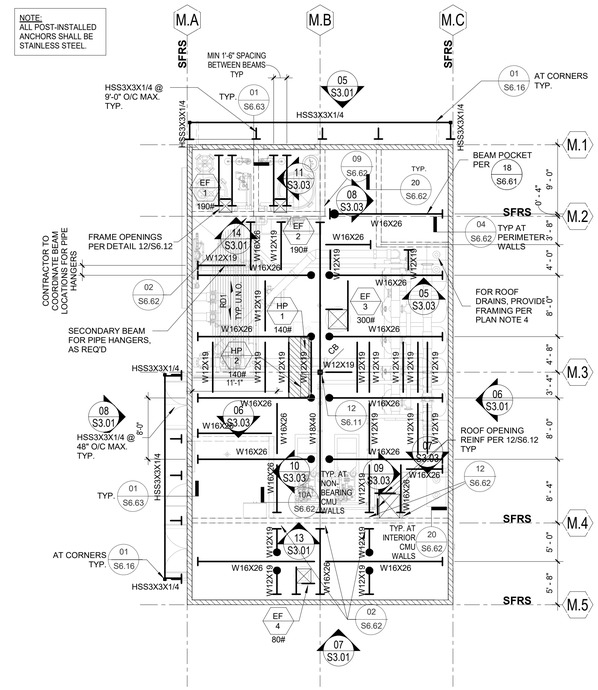

ROOF FRAMING PLAN - POOL MECHANICAL BUILDING | 07

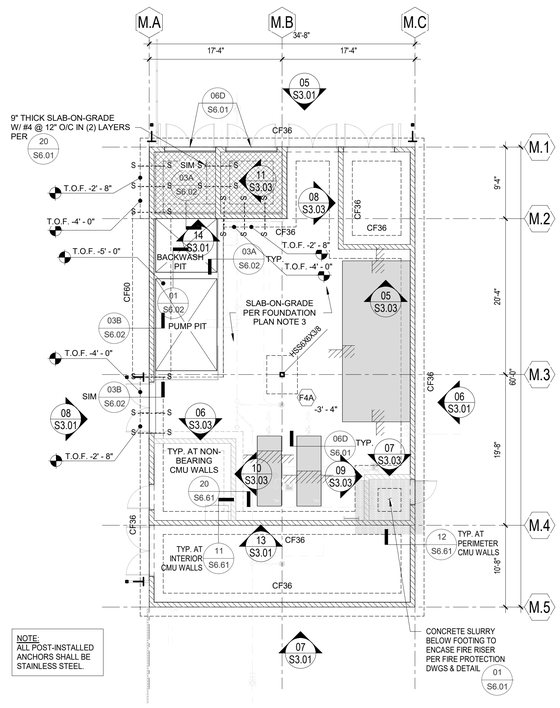

NOTE:
ALL POST-INSTALLED ANCHORS SHALL BE STAINLESS STEEL.

SPREAD FOOTING SCHEDULE

FOOTING MARK	FOOTING SIZE		FOOTING REINFORCING (PROVIDE HOOKS AT ENDS)
	WIDTH x LENGTH	THICKNESS	
F4A	4'-0" x 5'-0"	18"	(5) #6 EA. WAY BOTTOM

CONTINUOUS FOOTING SCHEDULE

Mark	FOOTING SIZE (WIDTH x DEPTH)	REINFORCING	
		CONTINUOUS LONGITUDINAL BARS	TRANSVERSE BARS
CF36	36x18	(4) #6 TOP and BOTTOM	#4 STIRRUPS @ 12" O/C
CF60	60x18	(6) #6 TOP and BOTTOM	#4 STIRRUPS @ 12" O/C

NOTE: TERMINATE ALL LONGITUDINAL REINF. BARS W/ STANDARD 90 DEGREE BENDS AT ENDS OF CFXX FOOTINGS, UNLESS NOTED OTHERWISE

FOUNDATION PLAN - POOL MECHANICAL BUILDING | 05

ROOF FRAMING PLAN NOTES

1. FOR GENERAL NOTES SEE S0.01 and TYPICAL DETAILS SEE S6 SERIES SHEETS.
2. SEE ARCHITECTURAL DRAWINGS FOR TOP OF STRUCTURAL STEEL PARAPET, and SCREENWALL ELEVATIONS; ROOF DEPRESSIONS, SLOPES, CURBS, DRAINS, DECK EDGE LOCATIONS; PARAPET and SCREENWALL OVERALL DIMENSIONS; and LOCATIONS OF OPENINGS NOT INDICATED ON STRUCTURAL DRAWINGS. INTERPOLATE AS NECESSARY TO DETERMINE TOP OF STRUCTURAL STEEL ELEVATIONS AT SLOPED MEMBERS BETWEEN POINTS INDICATED ON ARCHITECTURAL DRAWINGS.
3. CENTER COLUMNS AT GRID INTERSECTIONS UNLESS INDICATED OTHERWISE.
4. FOR OPENINGS IN ROOF UP TO 2'-0" SQUARE SEE 10/S6.12 and FOR OPENINGS UP TO 4'-0" MAXIMUM (PERPENDICULAR TO DECK SPAN) SEE 12/S6.12
5. MAINTAIN TYPICAL INTERIOR ROOF DECK EDGE DIMENSION OF 10" FROM BEAM CENTERLINE TO OUTER EDGE OF CLOSURE PLATE UNLESS INDICATED OTHERWISE OR IF BEAMS and SLA6 EDGE LOCATIONS ARE SET DUE TO OTHER CONSTRAINTS - SEE DETAILS 03/S6.13.
6. NO PENETRATION THROUGH STRUCTURAL STEEL IS PERMITTED UNLESS SPECIFICALLY SHOWN ON STRUCTURAL DRAWINGS.
7. CONSTRUCT LIGHT GAUGE METAL INTERIOR STUD WALLS PER SHEET S6.71 UNLESS SPECIFICALLY DETAILED OTHERWISE.

ROOF FRAMING LEGEND

- CB — INDICATES COLUMN BELOW - SEE FOUNDATION PLAN FOR COLUMN SIZE
- DENOTES STEEL BEAM FACE MOUNT CONN. TO PERIMETER CMU WALL PER 07/S6.62 OR TO INTERIOR CMU WALL PER 12/S6.62
- DENOTES STEEL BEAM FACE MOUNT DRAG CONN. TO WALL ALL MEMBERS UTILIZING DRAG CONNECTIONS ARE PART OF SFRS SEE 14 OR 17/S6.62
- DENOTES STEEL BEAM TO STEEL BEAM DRAG CONNECTION - SEE DETAIL 04/S6.11
- DENOTES NON-FRAME MOMENT CONNECTION OR ORDINARY MOMENT CONNECTION - SEE 10/S6.11
- WXxXX / <X"> — INDICATES NON-FRAME STEEL BEAM - SEE 1A/S6.11 FOR TYPICAL BEAM TO GIRDER TWO-SIDED CONNECTIONS, 1B/S6.11 FOR TYPICAL BEAM TO GIRDER ONE-SIDED CONNECTIONS
  INDICATES UPWARD CAMBER (IN INCHES) AT MIDSPAN OF BEAM (IF BEAM CANTILEVERS, HOLD CANTILEVERED PORTION LEVEL) - IF NO CAMBER INDICATED, NO CAMBER REQUIRED
- (-X") — INDICATES ELEVATION OF TOP OF STEEL (TOS) RELATIVE TO TOP OF STRUCTURAL DECK - IF NO ELEVATION INDICATED, LOCATE TOS BELOW TOP OF STRUCTURAL DECK AS FOLLOWS: RD1.....1 1/2"
- INDICATES BEAM SPLICE PER 1D/S6.11 U.N.O.
- RD1 — INDICATES ROOF CONSTRUCTION MARK - SEE DETAIL 01/S6.12 - PROVIDE CLOSURES OVER BEAMS AT DECKING CHANGE IN SPAN DIRECTION PER 01B/S6.12
- INDICATE NON-BEARING WALL BELOW
- INDICATES CMU WALL BELOW
- SFRS — SEISMIC FORCE RESISTING SYSTEM (SFRS) - SEE GENERAL NOTE SECTION H, NOTE 4.c - WHEN (SFRS) IS INDICATED, ALL MEMBERS IN THAT FRAMING LINE ARE SFRS MEMBERS
- INDICATES MEP EQUIPMENT TAG
- XXX# — INDICATES MAX. EQUIPMENT WEIGHT INCLUDING ALL ACCESSORIES
- INDICATES BUILT-UP HOUSEKEEPING PAD PER 15/S6.92

FOUNDATION PLAN NOTES

1. FOR GENERAL NOTES SEE S0.01 and TYPICAL DETAILS SEE S6 SERIES SHEETS.
2. SEE ARCHITECTURAL DRAWINGS FOR TOP OF CONCRETE SLAB ON GRADE ELEVATIONS, DEPRESSIONS, SLOPES, OPENINGS, DRAINS, TRENCHES, PADS, and CURBS; SLAB EDGE LOCATIONS; WALL OVERALL DIMENSIONS; and LOCATIONS OF OPENINGS NOT INDICATED ON STRUCTURAL DRAWINGS.
3. BUILDING SLAB-ON-GRADE: 5" THICK W/ #4 @ 12" O/C EACH WAY at CENTER OF SLAB OVER 15-MIL VAPOR BARRIER OVER 6" OF 3/4" CRUSH ROCK OVER PROPERLY PREPARED SOIL AS DESCRIBED IN GENERAL NOTES and GEOTECHNICAL REPORT. PROVIDE CONSTRUCTION JOINTS OR WEAKENED PLANE JOINTS IN SLAB-ON-GRADE EACH DIRECTION PER DETAIL 06/S6.01 - AT AREAS TO RECEIVE TILE, COORDINATE LOCATION OF JOINTS IN SLAB TO ALIGN WITH TILE EXPANSION JOINTS PER ARCH'L.
4. CENTER COLUMNS ON NUMBERED GRID LINES UNLESS INDICATED OTHERWISE. CENTER SPREAD FOOTINGS and CONTINUOUS FOOTINGS ON COLUMNS UNLESS INDICATED OTHERWISE.
5. IN NO CASE SHALL PIPES, CONDUITS, OR SLEEVES BE EMBEDDED IN SPREAD FOOTINGS OR WITHIN TOP OR BOTTOM THIRD OF GRADE BEAMS (CONT. FOOTING) UNLESS SPECIFICALLY DETAILED ON STRUCTURAL DRAWINGS.
6. WHERE CONTINUOUS FOOTINGS and SPREAD FOOTINGS INTERSECT, EXCAVATE TO BOTTOM OF DEEPER FOOTING and CONTINUE ALL BARS THRU INTERSECTION. PLACE BARS AT CONTINUOUS FOOTING CORNERS and INTERSECTIONS PER 05/S6.01. WHERE CONTINUOUS FOOTINGS TERMINATE AT SIDES OF GRADE BEAMS OR SPREAD FOOTINGS, EXTEND LONGITUDINAL BARS TO FAR SIDE OF GRADE BEAM OR SPREAD FOOTING and TERMINATE W/ STANDARD 90" HOOK.
7. LOCATE TOP OF SPREAD FOOTINGS and CONTINUOUS FOOTINGS 1'-4" BELOW LOWEST ADJACENT FINISH FLOOR UNO - ENSURE FIRST HORIZONTAL CMU BLOCK JOINT ALIGNS W/ FINISH FLOOR - CUT FIRST CMU BLOCK ABOVE FOOTING IF NECESSARY.
8. COMPACTION REPORT SHALL BE SUBMITTED TO THE PROJECT INSPECTOR PRIOR TO FOOTING INSPECTION.

FOUNDATION LEGEND

- HSSXXXXX — INDICATES NON-FRAME COLUMN ABOVE - FOR BASE PLATE INFO SEE 09/S611 U.N.O.
- INDICATES SPREAD FOOTING MARK - SEE SCHEDULE THIS SHEET and FOUNDATION LEGEND
- FX / XX.XX" — INDICATES TOP OF SPREAD FOOTING ELEVATION - IF NO ELEVATION INDICATED, LOCATE TOP OF SPREAD FOOTING PER FOUNDATION PLAN NOTE 7
- CFX — INDICATES CONTINUOUS FOOTING MARK - CONSTRUCT CONTINUOUS FOOTING PER SCHEDULE THIS SHEET
- S - - - - - S — INDICATES STEP IN CONTINUOUS FOOTING OR GRADE BEAM - SEE 09/S6.01
- INDICATES CHANGE IN ELEVATION AT SLAB ON GRADE - SEE DETAIL 12/S6.02 UNLESS DETAILED OTHERWISE
- OR — INDICATES CONCRETE CURB OR HOUSEKEEPING PAD - CONSTRUCT PER 06D/S6.01 U.N.O.
- +X'-X" — INDICATES ELEVATION OF TOP OF STRUCTURAL CONCRETE SLAB (TOC) - SEE ARCHITECTURAL FOR TOC IF NO ELEVATION INDICATED
- T.O.F. +X'-X" — DENOTES TOP OF FOOTING ELEVATION RELATIVE TO ADJACENT STRUCTURAL SLAB ELEVATION
- DENOTES METAL STUD INTERIOR WALL - CONSTRUCTION PER 01/S6.71
- DENOTES 8" THICK NON-BEARING FULLY GROUTED CONCRETE BLOCK WALL - SEE 01/S6.61 FOR REINFORCING
- DENOTES 8" THICK CONCRETE BLOCK SHEAR WALL SOLID GROUTED - FOR REINFORCING and OTHER INFORMATION SEE S6.61 and CMU WALL ELEVATIONS

DESIGN LOADS

FLOOR:
LIVE LOAD FLOOR (UNREDUCIBLE) — 100 PSF

ROOF:
LIVE LOAD ROOF (REDUCIBLE) — 20 PSF
PV PANEL DESIGN WEIGHT — 0 PSF
PV PANEL DESIGN WEIGHT — 0 PSF
CONCENTRATED LIVE LOAD — 300 LB

IDENTIFICATION STAMP
DIV. OF THE STATE ARCHITECT
APP: 02-119490 INC:
REVIEWED FOR
SS ☑ FLS ☑ ACS ☑
DATE: 09/13/2022

INTERIORS
PLANNING

916-287-2400 Office
916-287-2401 Fax
LPADesignStudios.com
431 I Street,
Suite 107
Sacramento, California 95814

REGISTERED PROFESSIONAL ENGINEER
DANIEL S. WALKER
No. S4833
Exp. 12/31/22
STRUCTURAL
STATE OF CALIFORNIA

This document and all other project documents, ideas, aesthetics and designs incorporated therein are instruments of service. All project documents are copyright protected, are the property of LPA, Inc. (LPA) and cannot be lawfully used in whole or in part for any project or purpose except as set forth in the contractual agreement between LPA and its Client. The unauthorized disclosure and/or use of the project documents (including the creation of derivative works), may give rise to liability for copyright infringement, unlawful disclosure, use or misappropriation of property rights held by LPA. The unauthorized use of the project documents will give rise to the recovery of monetary losses and damages including attorney fees and costs for which the unauthorized user will be held liable.
Project documents describe the design intent of the work and are not a representation of as-built or existing conditions. LPA is not responsible for any discrepancies between the project documents and the existing conditions.

© LPA, Inc.

DAVIS SR HIGH SCHOOL AQUATICS CENTER

315 W 14TH ST., DAVIS, CA 95616

Developed for
DAVIS JOINT UNIFIED SCHOOL DISTRICT

Revision	Date

Submittal	Date
50% DD REVIEW	06/15/2021
100% DD SUBMITTAL	07/26/2021
50% CD REVIEW	10/08/2021
100% CD DSA SUBMITTAL	10/22/2021

Job Number	1904413
Date Published	06/15/2021
Checked By	Checker
Scale	1/8" = 1'-0"

PLANS - POOL MECHANICAL BUILDING

S2.11

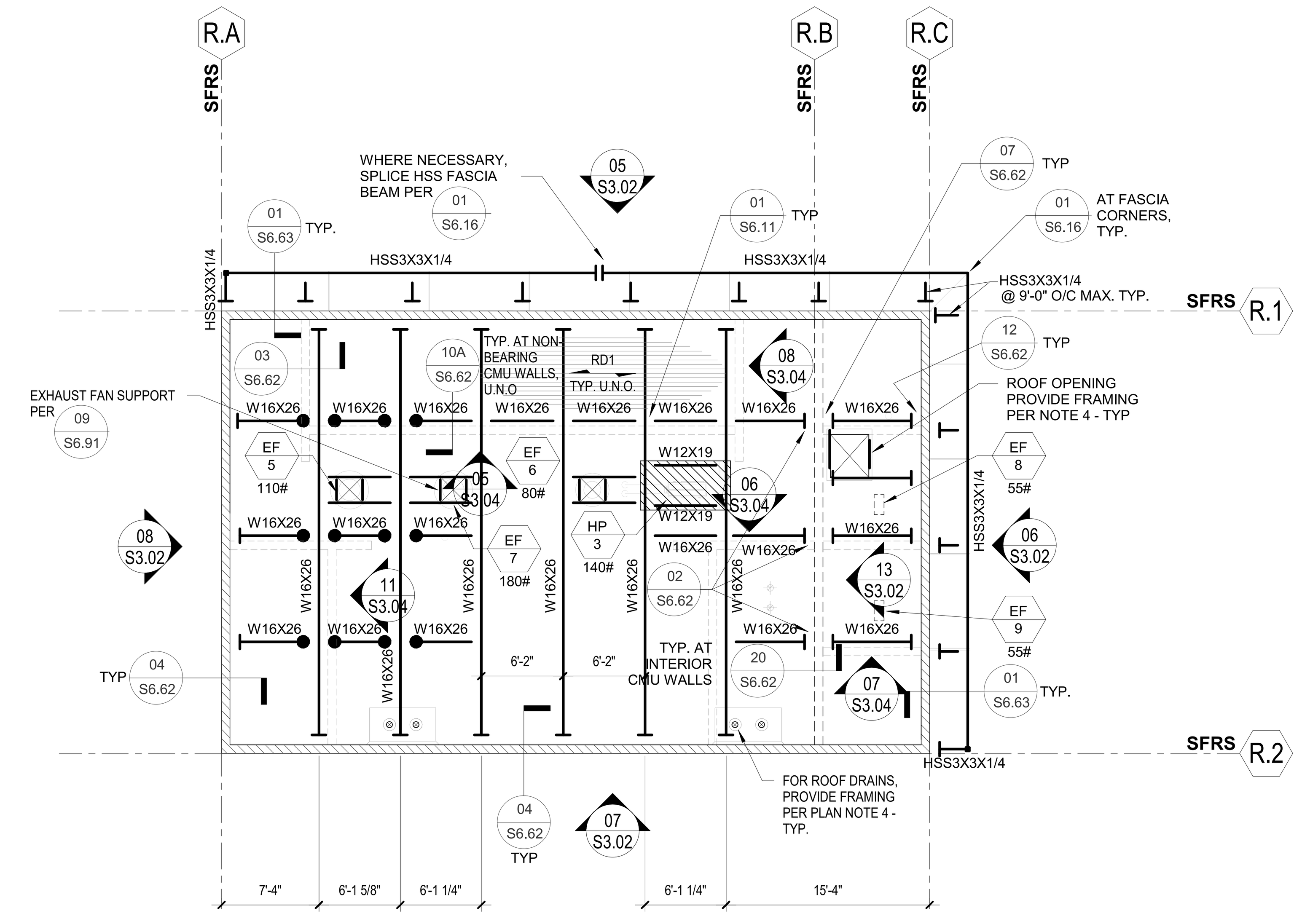

ROOF FRAMING PLAN - POOL RESTROOM BUILDING 07

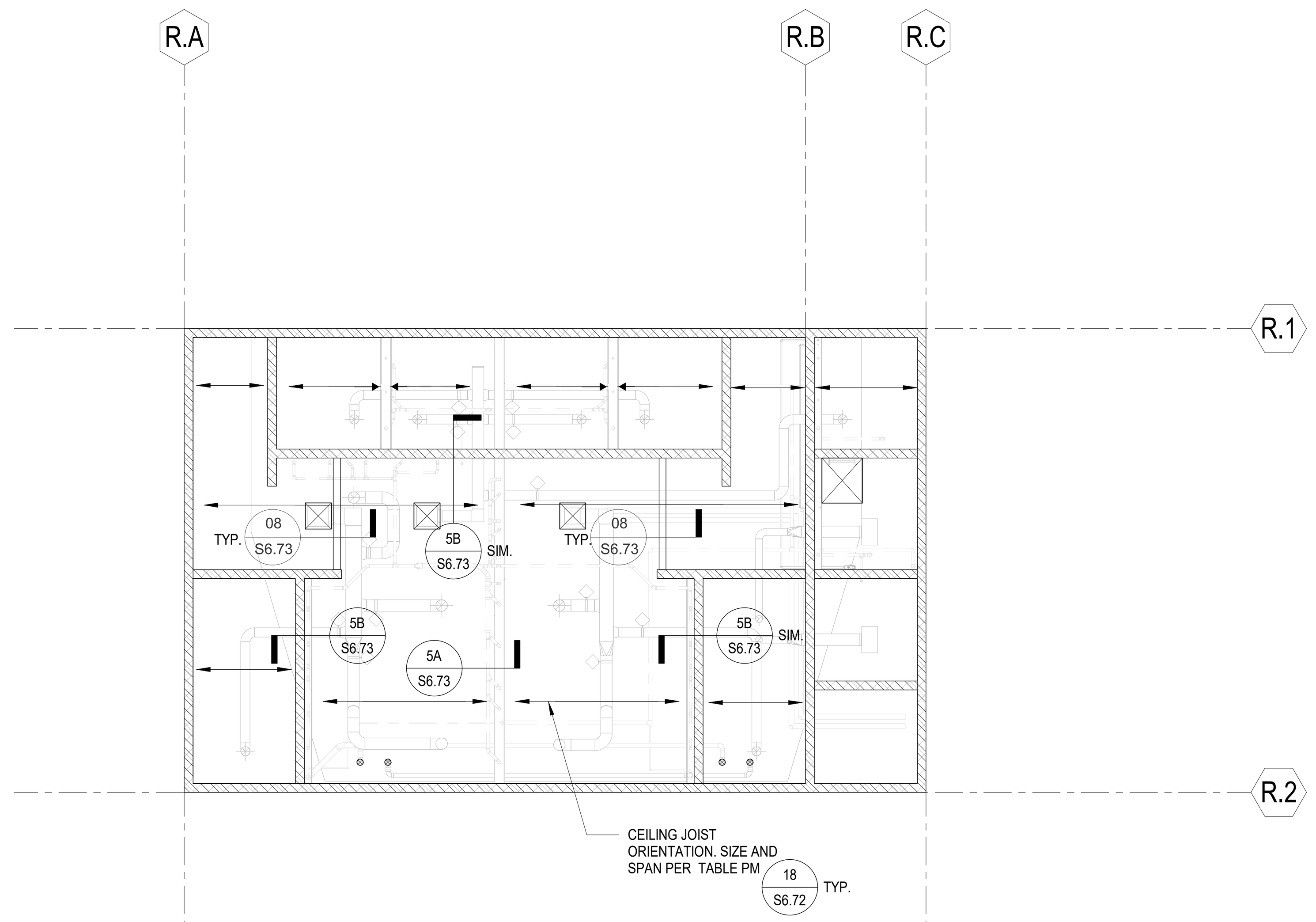

CEILING FRAMING PLAN 09

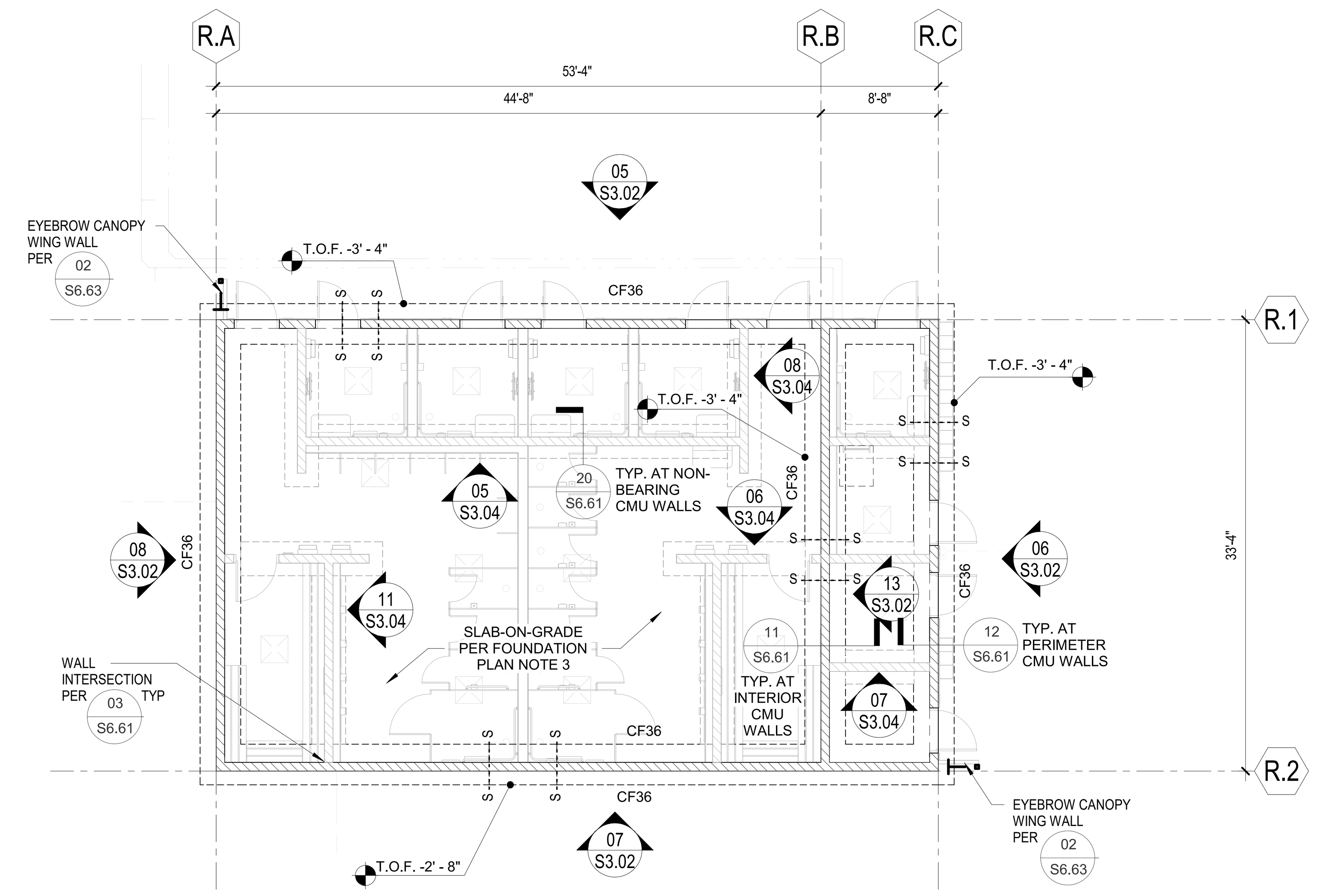

CONTINUOUS FOOTING SCHEDULE			
Mark	FOOTING SIZE (WIDTH x DEPTH)	REINFORCING: CONTINUOUS LONGITUDINAL BARS	REINFORCING: TRANSVERSE BARS
CF36	36x18	(4) #6 TOP and BOTTOM	#4 STIRRUPS @ 12" O/C
CF60	60x18	(6) #6 TOP and BOTTOM	#4 STIRRUPS @ 12" O/C

FOUNDATION PLAN - POOL RESTROOM BUILDING 05

ROOF FRAMING PLAN NOTES

1. FOR GENERAL NOTES SEE S0.01 and TYPICAL DETAILS SEE S6 SERIES SHEETS.
2. SEE ARCHITECTURAL DRAWINGS FOR TOP OF STRUCTURAL STEEL PARAPET, and SCREENWALL ELEVATIONS; ROOF DEPRESSIONS, SLOPES, CURBS, DRAINS, DECK EDGE LOCATIONS; PARAPET and SCREENWALL OVERALL DIMENSIONS; and LOCATIONS OF OPENINGS NOT INDICATED ON STRUCTURAL DRAWINGS. INTERPOLATE AS NECESSARY TO DETERMINE TOP OF STRUCTURAL STEEL ELEVATIONS AT SLOPED MEMBERS BETWEEN POINTS INDICATED ON ARCHITECTURAL DRAWINGS.
3. CENTER COLUMNS AT GRID INTERSECTIONS UNLESS INDICATED OTHERWISE.
4. FOR OPENINGS IN ROOF UP TO 2'-0" SQUARE SEE 10/S6.12 and FOR OPENINGS UP TO 4'-0" MAXIMUM (PERPENDICULAR TO DECK SPAN) SEE 12/S6.12
5. MAINTAIN TYPICAL INTERIOR ROOF DECK EDGE DIMENSION OF 10" FROM BEAM CENTERLINE TO OUTER EDGE OF CLOSURE PLATE UNLESS INDICATED OTHERWISE OR IF BEAMS and SLAB EDGE LOCATIONS ARE SET DUE TO OTHER CONSTRAINTS - SEE DETAILS 03/S6.13.
6. NO PENETRATION THROUGH STRUCTURAL STEEL IS PERMITTED UNLESS SPECIFICALLY SHOWN ON STRUCTURAL DRAWINGS.
7. CONSTRUCT LIGHT GAUGE METAL INTERIOR STUD WALLS PER SHEET S6.71 UNLESS SPECIFICALLY DETAILED OTHERWISE.

ROOF FRAMING LEGEND

CB — INDICATES COLUMN BELOW - SEE FOUNDATION PLAN FOR COLUMN SIZE

DENOTES STEEL BEAM FACE MOUNT CONN. TO PERIMETER CMU WALL PER 07/S6.62 OR TO INTERIOR CMU WALL PER 12/S6.62

DENOTES STEEL BEAM FACE MOUNT DRAG CONN. TO WALL ALL MEMBERS UTILIZING DRAG CONNECTIONS ARE PART OF SFRS SEE 14 OR 17/S6.62

DENOTES STEEL BEAM TO STEEL BEAM DRAG CONNECTION - SEE DETAIL 04/S6.11

DENOTES NON-FRAME MOMENT CONNECTION OR ORDINARY MOMENT CONNECTION - SEE 10/S6.11

WXxXX — INDICATES NON-FRAME STEEL BEAM - SEE 1A/S6.11 FOR TYPICAL BEAM TO GIRDER TWO-SIDED CONNECTIONS, 1B/S6.11 FOR TYPICAL BEAM TO GIRDER ONE-SIDED CONNECTIONS

<X"> — INDICATES UPWARD CAMBER (IN INCHES) AT MIDSPAN OF BEAM (IF BEAM CANTILEVERS, HOLD CANTILEVERED PORTION LEVEL) - IF NO CAMBER INDICATED, NO CAMBER REQUIRED

(-X") — INDICATES ELEVATION OF TOP OF STEEL (TOS) RELATIVE TO TOP OF STRUCTURAL DECK - IF NO ELEVATION INDICATED, LOCATE TOS BELOW TOP OF STRUCTURAL DECK AS FOLLOWS:
RD1.........1 1/2"

INDICATES BEAM SPLICE PER 1D/S6.11 U.N.O.

RD1 — INDICATES ROOF CONSTRUCTION MARK - SEE DETAIL 01/S6.12 - PROVIDE CLOSURES OVER BEAMS AT DECKING CHANGE IN SPAN DIRECTION PER 01B/S6.12

INDICATE NON-BEARING WALL BELOW

INDICATES CMU WALL BELOW

SFRS — SEISMIC FORCE RESISTING SYSTEM (SFRS) - SEE GENERAL NOTE SECTION H, NOTE 4.c - WHEN (SFRS) IS INDICATED, ALL MEMBERS IN THAT FRAMING LINE ARE SFRS MEMBERS

INDICATES MEP EQUIPMENT TAG

XXX# — INDICATES MAX. EQUIPMENT WEIGHT INCLUDING ALL ACCESSORIES

INDICATES BUILT-UP HOUSEKEEPING PAD PER 15/S6.92

FOUNDATION PLAN NOTES

1. FOR GENERAL NOTES SEE S0.01 and TYPICAL DETAILS SEE S6 SERIES SHEETS.
2. SEE ARCHITECTURAL DRAWINGS FOR TOP OF CONCRETE SLAB ON GRADE ELEVATIONS, DEPRESSIONS, SLOPES, OPENINGS, DRAINS, TRENCHES, PADS, and CURBS; SLAB EDGE LOCATIONS; WALL OVERALL DIMENSIONS; and LOCATIONS OF OPENINGS NOT INDICATED ON STRUCTURAL DRAWINGS.
3. BUILDING SLAB-ON-GRADE: 5" THICK W/ #4 @ 12" O/C EACH WAY at CENTER OF SLAB OVER 15-MIL VAPOR BARRIER OVER 6" OF 3/4" CRUSH ROCK OVER PROPERLY PREPARED SOIL AS DESCRIBED IN GENERAL NOTES and GEOTECHNICAL REPORT. PROVIDE CONSTRUCTION JOINTS OR WEAKENED PLANE JOINTS IN SLAB-ON-GRADE EACH DIRECTION PER DETAIL 06/S6.01 - AT AREAS TO RECEIVE TILE, COORDINATE LOCATION OF JOINTS IN SLAB TO ALIGN WITH TILE EXPANSION JOINTS PER ARCH'L.
4. CENTER COLUMNS ON NUMBERED GRID LINES UNLESS INDICATED OTHERWISE. CENTER SPREAD FOOTINGS and CONTINUOUS FOOTINGS ON COLUMNS UNLESS INDICATED OTHERWISE.
5. IN NO CASE SHALL PIPES, CONDUITS, OR SLEEVES BE EMBEDDED IN SPREAD FOOTINGS OR WITHIN TOP OR BOTTOM THIRD OF GRADE BEAMS (CONT. FOOTING) UNLESS SPECIFICALLY DETAILED ON STRUCTURAL DRAWINGS.
6. WHERE CONTINUOUS FOOTINGS and SPREAD FOOTINGS INTERSECT, EXCAVATE TO BOTTOM OF DEEPER FOOTING and CONTINUE ALL BARS THRU INTERSECTION. PLACE BARS AT CONTINUOUS FOOTING CORNERS and INTERSECTIONS PER 05/S6.01. WHERE CONTINUOUS FOOTINGS TERMINATE AT SIDES OF GRADE BEAMS OR SPREAD FOOTINGS, EXTEND LONGITUDINAL BARS TO FAR SIDE OF GRADE BEAM OR SPREAD FOOTING and TERMINATE W/ STANDARD 90° HOOK.
7. LOCATE TOP OF SPREAD FOOTINGS and CONTINUOUS FOOTINGS 1'-4" BELOW LOWEST ADJACENT FINISH FLOOR UNO - ENSURE FIRST HORIZONTAL CMU BLOCK JOINT ALIGNS W/ FINISH FLOOR - CUT FIRST CMU BLOCK ABOVE FOOTING IF NECESSARY.
8. COMPACTION REPORT SHALL BE SUBMITTED TO THE PROJECT INSPECTOR PRIOR TO FOOTING INSPECTION.

FOUNDATION LEGEND

HSSXxXxX/X — INDICATES NON-FRAME COLUMN ABOVE - FOR BASE PLATE INFO SEE 09/S611 U.N.O.

INDICATES SPREAD FOOTING MARK - SEE SCHEDULE THIS SHEET and FOUNDATION LEGEND

FX XX.XX' — INDICATES TOP OF SPREAD FOOTING ELEVATION - IF NO ELEVATION INDICATED, LOCATE TOP OF SPREAD FOOTING PER FOUNDATION PLAN NOTE 7

CFX — INDICATES CONTINUOUS FOOTING MARK - CONSTRUCT CONTINUOUS FOOTING PER SCHEDULE THIS SHEET

S - - - - - S — INDICATES STEP IN CONTINUOUS FOOTING OR GRADE BEAM - SEE 09/S6.01

INDICATES CHANGE IN ELEVATION AT SLAB ON GRADE - SEE DETAIL 12/S6.02 UNLESS DETAILED OTHERWISE

OR — INDICATES CONCRETE CURB OR HOUSEKEEPING PAD - CONSTRUCT PER 06D/S6.01 U.N.O.

+X'-X" — INDICATES ELEVATION OF TOP OF STRUCTURAL CONCRETE SLAB (TOC) - SEE ARCHITECTURAL FOR TOC IF NO ELEVATION INDICATED

T.O.F. +X'-X" — DENOTES TOP OF FOOTING ELEVATION RELATIVE TO ADJACENT STRUCTURAL SLAB ELEVATION

DENOTES METAL STUD INTERIOR WALL - CONSTRUCTION PER 01/S6.71

DENOTES 8" THICK NON-BEARING FULLY GROUTED CONCRETE BLOCK WALL - SEE 01/S6.61 FOR REINFORCING

DENOTES 8" THICK CONCRETE BLOCK SHEAR WALL SOLID GROUTED - FOR REINFORCING and OTHER INFORMATION SEE S6.61 and CMU WALL ELEVATIONS

DESIGN LOADS

FLOOR:	
LIVE LOAD FLOOR (UNREDUCIBLE)	100 PSF
ROOF:	
LIVE LOAD ROOF (REDUCIBLE)	20 PSF
PV PANEL DESIGN WEIGHT	0 PSF
PV PANEL DESIGN WEIGHT	0 PSF
CONCENTRATED LIVE LOAD	300 LB

IDENTIFICATION STAMP
DIV. OF THE STATE ARCHITECT
APP: 02-119490 INC:
REVIEWED FOR
SS ☑ FLS ☑ ACS ☑
DATE: 09/13/2022

INTERIORS
LANNING

916-287-2400 Office
916-287-2401 Fax
LPADesignStudios.com
431 I Street,
Suite 107
Sacramento, California 95814

REGISTERED PROFESSIONAL ENGINEER
DANIEL S. WANG
No. S4453
Exp. 12/31/22
STRUCTURAL
STATE OF CALIFORNIA

This document and all other project documents, ideas, aesthetics and designs incorporated therein are instruments of service. All project documents are copyright protected, are the property of LPA, Inc. (LPA) and cannot be lawfully used in whole or in part for any project or purpose except as set forth in the contractual agreement between LPA and its Client. The unauthorized disclosure and/or use of the project documents (including the creation of derivative works), may give rise to liability for copyright infringement, unlawful disclosure, use or misappropriation of property rights held by LPA. The unauthorized use of the project documents will give rise to the recovery of monetary losses and damages including attorney fees and costs for which the unauthorized user will be held liable.
Project documents describe the design intent of the work and are not a representation of as-built or existing conditions. LPA is not responsible for any discrepancies between the project documents and the existing conditions.

© LPA, Inc.

DAVIS SR HIGH SCHOOL AQUATICS CENTER
315 W 14TH ST., DAVIS, CA 95616
Developed for
DAVIS JOINT UNIFIED SCHOOL DISTRICT

Revision	Date

Submittal	Date
50% DD REVIEW	06/15/2021
100% DD SUBMITTAL	07/26/2021
50% CD REVIEW	10/08/2021
100% CD DSA SUBMITTAL	10/22/2021

Job Number	1904413
Date Published	06/15/2021
Checked By	Checker
Scale	1/8" = 1'-0"

PLANS - POOL RESTROOM BUILDING

S2.12

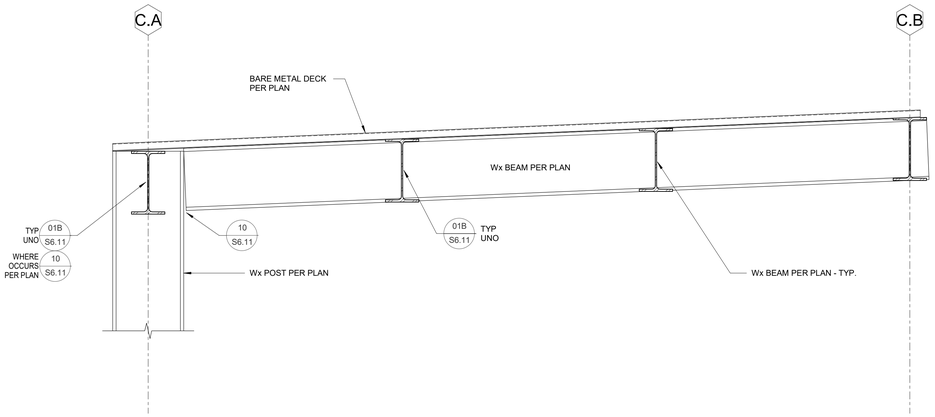

CANOPY SECTION | 16

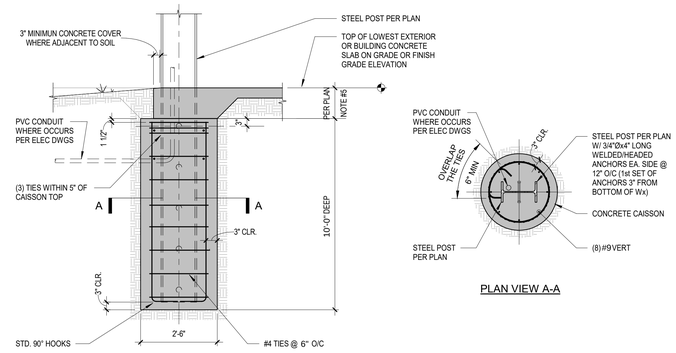

CAISSON DETAIL

PLAN VIEW A-A

CANOPY CAISSON DETAIL | 08

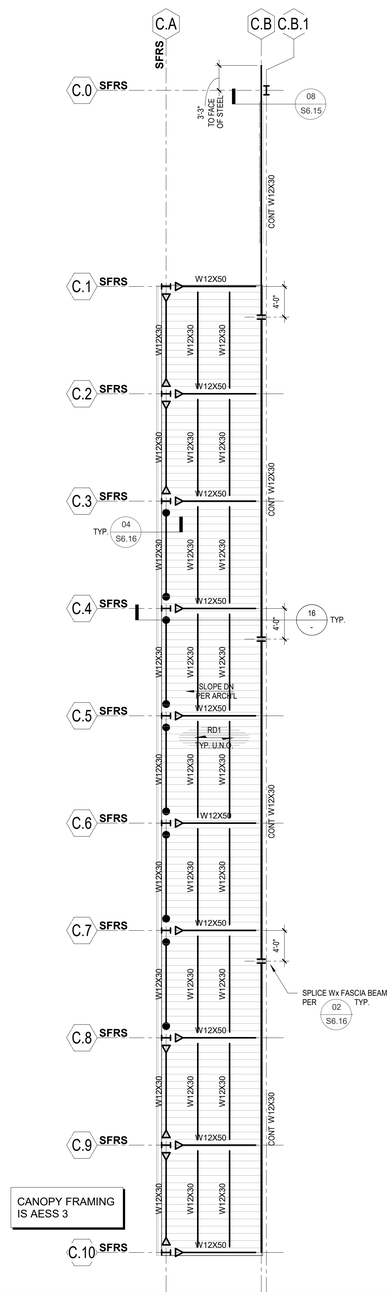

ROOF FRAMING PLAN - CANOPY | 13

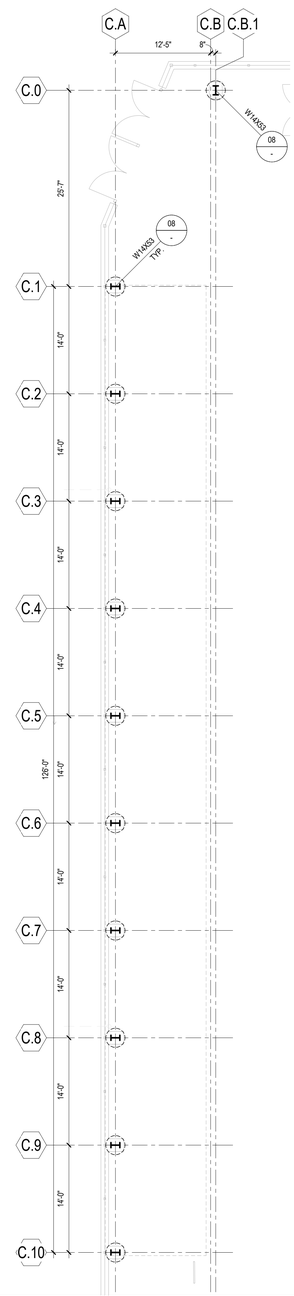

FOUNDATION PLAN - CANOPY | 05

ROOF FRAMING PLAN NOTES

1. FOR GENERAL NOTES SEE S0.01 and TYPICAL DETAILS SEE S6 SERIES SHEETS.
2. SEE ARCHITECTURAL DRAWINGS FOR TOP OF STRUCTURAL STEEL PARAPET, and SCREENWALL ELEVATIONS; ROOF DEPRESSIONS, SLOPES, CURBS, DRAINS, DECK EDGE LOCATIONS; PARAPET and SCREENWALL OVERALL DIMENSIONS; and LOCATIONS OF OPENINGS NOT INDICATED ON STRUCTURAL DRAWINGS. INTERPOLATE AS NECESSARY TO DETERMINE TOP OF STRUCTURAL STEEL ELEVATIONS AT SLOPED MEMBERS BETWEEN POINTS INDICATED ON ARCHITECTURAL DRAWINGS.
3. CENTER COLUMNS AT GRID INTERSECTIONS UNLESS INDICATED OTHERWISE.
4. FOR OPENINGS IN ROOF UP TO 2'-0" SQUARE SEE 10/S6.12 and FOR OPENINGS UP TO 4'-0" MAXIMUM (PERPENDICULAR TO DECK SPAN) SEE 12/S6.12
5. MAINTAIN TYPICAL INTERIOR ROOF DECK EDGE DIMENSION OF 10" FROM BEAM CENTERLINE TO OUTER EDGE OF CLOSURE PLATE UNLESS INDICATED OTHERWISE OR IF BEAMS and SLAB EDGE LOCATIONS ARE SET DUE TO OTHER CONSTRAINTS - SEE DETAILS 03/S6.13.
6. NO PENETRATION THROUGH STRUCTURAL STEEL IS PERMITTED UNLESS SPECIFICALLY SHOWN ON STRUCTURAL DRAWINGS.
7. CONSTRUCT LIGHT GAUGE METAL INTERIOR STUD WALLS PER SHEET S6.71 UNLESS SPECIFICALLY DETAILED OTHERWISE.

ROOF FRAMING LEGEND

- C8 — INDICATES COLUMN BELOW - SEE FOUNDATION PLAN FOR COLUMN SIZE
- DENOTES STEEL BEAM FACE MOUNT CONN. TO PERIMETER CMU WALL PER 07/S6.62 OR TO INTERIOR CMU WALL PER 12/S6.62
- DENOTES STEEL BEAM FACE MOUNT DRAG CONN. TO WALL ALL MEMBERS UTILIZING DRAG CONNECTIONS ARE PART OF SFRS SEE 14 OR 17/S6.62
- DENOTES STEEL BEAM TO STEEL BEAM DRAG CONNECTION - SEE DETAIL 04/S6.11
- DENOTES NON-FRAME MOMENT CONNECTION OR ORDINARY MOMENT CONNECTION - SEE 10/S6.11
- WXxXX — INDICATES NON-FRAME STEEL BEAM - SEE 1A/S6.11 FOR TYPICAL BEAM TO GIRDER TWO-SIDED CONNECTIONS, 1B/S6.11 FOR TYPICAL BEAM TO GIRDER ONE-SIDED CONNECTIONS
- <X"> — INDICATES UPWARD CAMBER (IN INCHES) AT MIDSPAN OF BEAM (IF BEAM CANTILEVERS, HOLD CANTILEVERED PORTION LEVEL) - IF NO CAMBER INDICATED, NO CAMBER REQUIRED
- (-X") — INDICATES ELEVATION OF TOP OF STEEL (TOS) RELATIVE TO TOP OF STRUCTURAL DECK - IF NO ELEVATION INDICATED, LOCATE TOS BELOW TOP OF STRUCTURAL DECK AS FOLLOWS: RD1.....1 1/2"
- INDICATES BEAM SPLICE PER 1D/S6.11 U.N.O.
- RD1 — INDICATES ROOF CONSTRUCTION MARK - SEE DETAIL 01/S6.12 - PROVIDE CLOSURES OVER BEAMS AT DECKING CHANGE IN SPAN DIRECTION PER 01B/S6.12
- INDICATE NON-BEARING WALL BELOW
- INDICATES CMU WALL BELOW
- SFRS — SEISMIC FORCE RESISTING SYSTEM (SFRS) - SEE GENERAL NOTE SECTION H, NOTE 4.c - WHEN (SFRS) IS INDICATED, ALL MEMBERS IN THAT FRAMING LINE ARE SFRS MEMBERS
- INDICATES MEP EQUIPMENT TAG
- XXX# — INDICATES MAX. EQUIPMENT WEIGHT INCLUDING ALL ACCESSORIES
- INDICATES BUILT-UP HOUSEKEEPING PAD PER 15/S6.92

FOUNDATION PLAN NOTES

1. FOR GENERAL NOTES SEE S0.01 and TYPICAL DETAILS SEE S6 SERIES SHEETS.
2. SEE ARCHITECTURAL DRAWINGS FOR TOP OF CONCRETE SLAB ON GRADE ELEVATIONS, DEPRESSIONS, SLOPES, OPENINGS, DRAINS, TRENCHES, PADS, and CURBS; SLAB EDGE LOCATIONS; WALL OVERALL DIMENSIONS; and LOCATIONS OF OPENINGS NOT INDICATED ON STRUCTURAL DRAWINGS.
3. CENTER COLUMNS ON NUMBERED GRID LINES UNLESS INDICATED OTHERWISE. CENTER SPREAD FOOTINGS and CONTINUOUS FOOTINGS ON COLUMNS UNLESS INDICATED OTHERWISE.
4. IN NO CASE SHALL PIPES, CONDUITS, OR SLEEVES BE EMBEDDED IN SPREAD FOOTINGS OR WITHIN TOP OR BOTTOM THIRD OF GRADE BEAMS (CONT. FOOTING) UNLESS SPECIFICALLY DETAILED ON STRUCTURAL DRAWINGS.
5. LOCATE TOP OF CAISSION FOOTINGS 1'-0" BELOW LOWEST ADJACENT GRADE, (U.N.O.)
6. COMPACTION REPORT SHALL BE SUBMITTED TO THE PROJECT INSPECTOR PRIOR TO FOOTING INSPECTION.

DESIGN LOADS

ROOF:

LIVE LOAD ROOF (REDUCIBLE)	20 PSF
PV PANEL DESIGN WEIGHT	0 PSF
CONCENTRATED LIVE LOAD	300 LB

IDENTIFICATION STAMP
DIV. OF THE STATE ARCHITECT
APP: 02-119490 INC:
REVIEWED FOR
SS ☑ FLS ☑ ACS ☑
DATE: 09/13/2022

INTERIORS
PLANNING

916-287-2400 Office
916-287-2401 Fax
LPADesignStudios.com
431 I Street,
Suite 107
Sacramento, California 95814

REGISTERED PROFESSIONAL ENGINEER
DANIEL S. WALTER
No. S4653
Exp. 12/31/22
STRUCTURAL
STATE OF CALIFORNIA

This document and all other project documents, ideas, aesthetics and designs incorporated therein are instruments of service. All project documents are copyright protected, are the property of LPA, Inc. (LPA) and cannot be lawfully used in whole or in part for any project or purpose except as set forth in the contractual agreement between LPA and its Client. The unauthorized disclosure and/or use of the project documents (including the creation of derivative works), may give rise to liability for copyright infringement, unlawful disclosure, use or misappropriation of property rights held by LPA. The unauthorized use of the project documents will give rise to the recovery of monetary losses and damages including attorney fees and costs for which the unauthorized user will be held liable.
Project documents describe the design intent of the work and are not a representation of as-built or existing conditions. LPA is not responsible for any discrepancies between the project documents and the existing conditions.

© LPA, Inc.

DAVIS SR HIGH SCHOOL AQUATICS CENTER

315 W 14TH ST., DAVIS, CA 95616

Developed for
DAVIS JOINT UNIFIED SCHOOL DISTRICT

Revision	Date

Submittal	Date
50% DD REVIEW	06/15/2021
100% DD SUBMITTAL	07/26/2021
50% CD REVIEW	10/08/2021
100% CD DSA SUBMITTAL	10/22/2021

Job Number	1904413
Date Published	06/15/2021
Checked By	Checker
Scale	As indicated

PLANS - CANOPY

S2.13

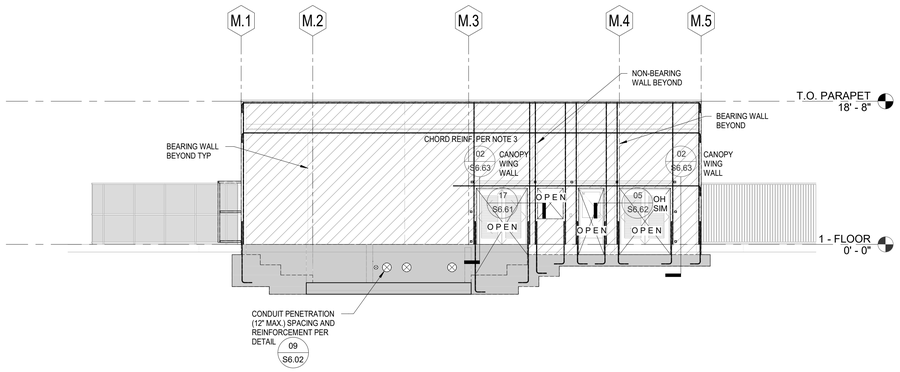

POOL MECHANICAL BUILDING - WEST | 08

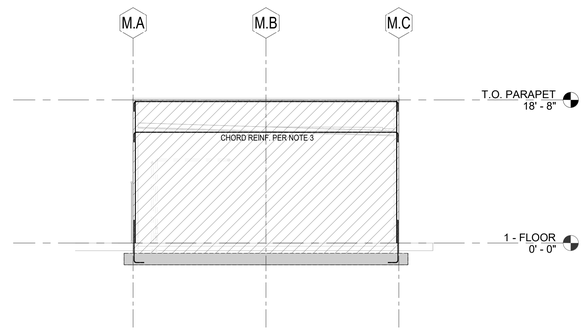

POOL MECHANICAL BUILDING - SOUTH | 07

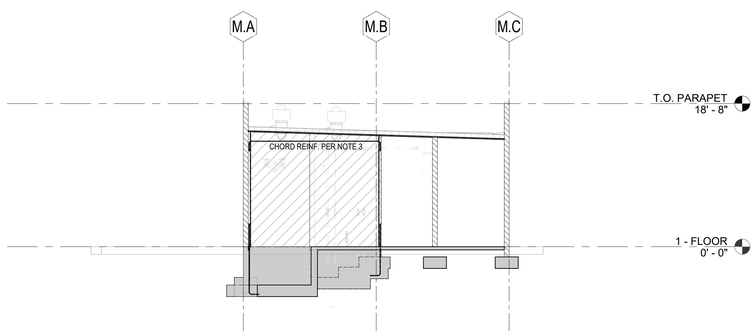

POOL MECHANICAL BUILDING - INTERIOR WALL ALONG GRID M.2 | 14

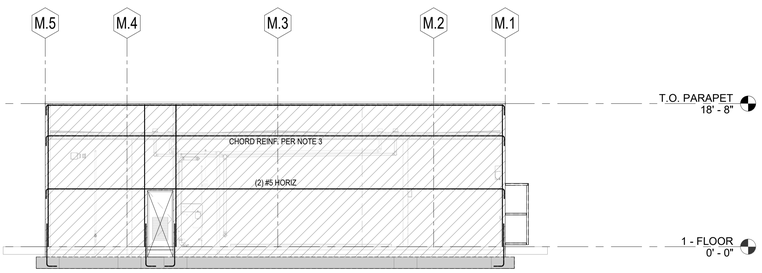

POOL MECHANICAL BUILDING - EAST | 06

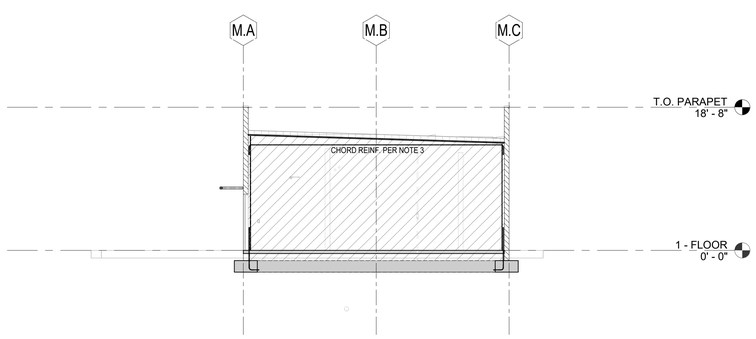

POOL MECHANICAL BUILDING - INTERIOR WALL ALONG GRID M.4 | 13

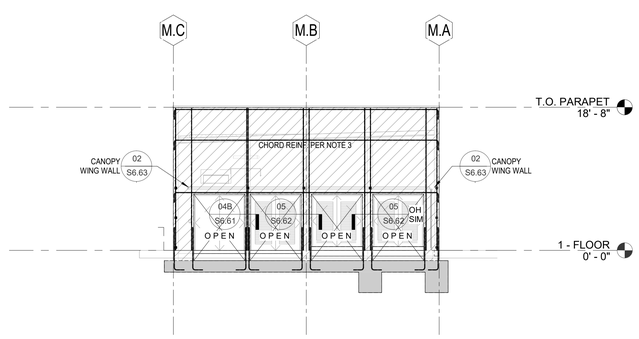

POOL MECHANICAL BUILDING - NORTH | 05

CONCRETE BLOCK SHEAR WALL ELEVATION NOTES

1. SEE ARCHITECTURAL DRAWINGS FOR TOP OF CONCRETE SLAB ON GRADE and ELEVATED SLAB ELEVATIONS, DEPRESSIONS and SLOPES, WALL OVERALL DIMENSIONS and LOCATIONS OF OPENINGS NOT INDICATED ON STRUCTURAL DRAWINGS.
2. CONSTRUCT MASONRY WALL INCLUDING CONDITION AT WALL ENDS and OPENINGS PER DETAIL 1/S6.61 UNLESS DETAILED OTHERWISE. SOLID GROUT ALL CELLS IN MASONRY WALLS.
3. PROVIDE CHORD REINFORCING WITHIN 24" OF T.O.S. OR T.O.W. ELEVATION. ENSURE 72db STAGGERED LAP SPLICE. PROVIDE (2) #6 MINIMUM.
4. FACE PLATES and ROOF LEDGERS NOT SHOWN FOR CLARITY
5. ENSURE FIRST HORIZONTAL CMU BLOCK JOINT ALIGNS W/ FINISH FLOOR. CUT FIRST CMU BLOCK ABOVE FOOTING IF NECESSARY
6. NO OPENING LARGER THAN 6" DIA. OR 6" SQ. IN 8" CMU WALL MADE WITHOUT CUTTING WALL VERTICAL REINFORCING, IS PERMITTED UNLESS THE LOCATIONS and SIZES ARE SHOWN ON SHEAR WALL ELEVATIONS. SEE DETAIL 7/6.61 FOR LIMITATIONS OF OPENINGS MADE W/ OUT INTERUPTING REINFORCING.
7. PROVIDE CONT. CHORD BARS ABOVE THE FLOOR/ROOF IN THE CMU WALL.
8. SEE ARCHL DRAWINGS FOR CMU WALL CONTROL JOINT LAYOUT.
9. BAR DEVELOPMENT LENGTH REQUIREMENTS PER DETAIL 1/S6.61 NOTES.

LEGEND

DENOTES 8" THICK CONCRETE BLOCK SHEAR WALL SOLID GROUTED - FOR REINFORCING and OTHER INFORMATION SEE S6.61

IDENTIFICATION STAMP
DIV. OF THE STATE ARCHITECT
APP: 02-119490 INC:
REVIEWED FOR
SS ☑ FLS ☑ ACS ☑
DATE: 09/13/2022

INTERIORS
PLANNING

916-287-2400 Office

916-287-2401 Fax

LPADesignStudios.com

431 I Street,
Suite 107
Sacramento, California 95814

REGISTERED PROFESSIONAL ENGINEER
DANIEL S. WALTER
No. S4837
Exp. 12/31/22
STRUCTURAL
STATE OF CALIFORNIA

This document and all other project documents, ideas, aesthetics and designs incorporated therein are instruments of service. All project documents are copyright protected, are the property of LPA, Inc. (LPA) and cannot be lawfully used in whole or in part for any project or purpose except as set forth in the contractual agreement between LPA and its Client. The unauthorized disclosure and/or use of the project documents (including the creation of derivative works), may give rise to liability for copyright infringement, unlawful disclosure, use or misappropriation of property rights held by LPA. The unauthorized use of the project documents will give rise to the recovery of monetary losses and damages including attorney fees and costs for which the unauthorized user will be held liable.
Project documents describe the design intent of the work and are not a representation of as-built or existing conditions. LPA is not responsible for any discrepancies between the project documents and the existing conditions.

© LPA, Inc.

DAVIS SR HIGH SCHOOL AQUATICS CENTER

315 W 14TH ST., DAVIS, CA 95616

Developed for
DAVIS JOINT UNIFIED SCHOOL DISTRICT

Revision	Date

Submittal	Date
50% DD REVIEW	06/15/2021
100% DD SUBMITTAL	07/26/2021
50% CD REVIEW	10/08/2021
100% CD DSA SUBMITTAL	10/22/2021

Job Number	1904413
Date Published	06/15/2021
Checked By	Checker
Scale	1/8" = 1'-0"

ELEVATIONS - POOL MECHANICAL BUILDING

S3.01

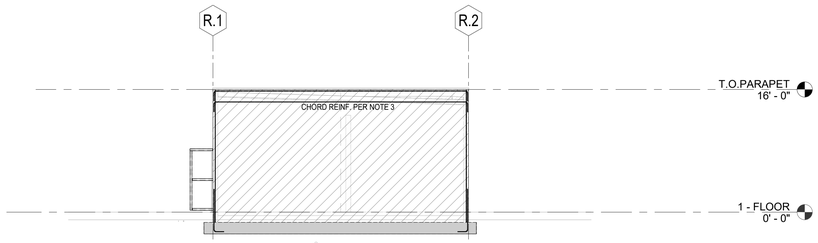

RESTROOM - WEST | 08

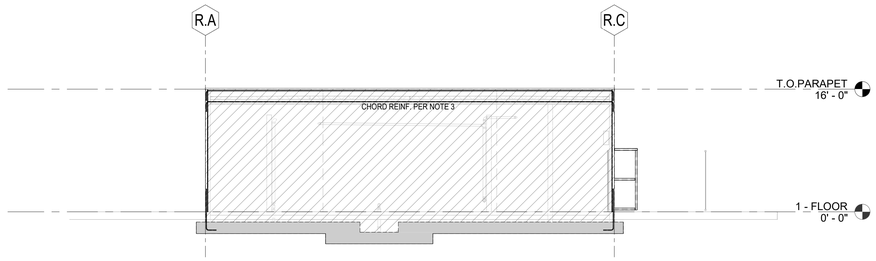

RESTROOM - SOUTH | 07

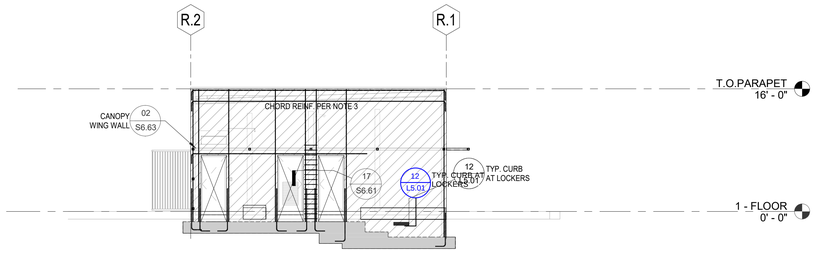

RESTROOM - EAST | 06

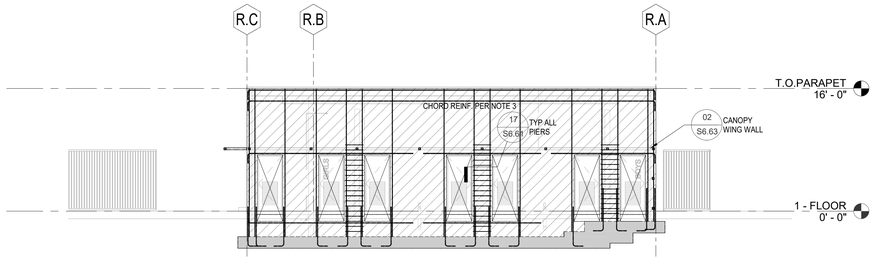

RESTROOM - NORTH | 05

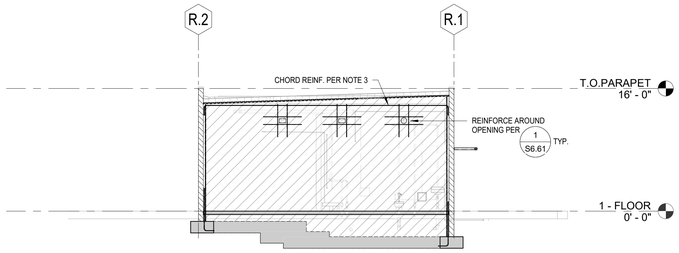

RESTROOM - INTERIOR WALL ALONG GRID R.B | 13

CONCRETE BLOCK SHEAR WALL ELEVATION NOTES

1. SEE ARCHITECTURAL DRAWINGS FOR TOP OF CONCRETE SLAB ON GRADE and ELEVATED SLAB ELEVATIONS, DEPRESSIONS and SLOPES, WALL OVERALL DIMENSIONS and LOCATIONS OF OPENINGS NOT INDICATED ON STRUCTURAL DRAWINGS.
2. CONSTRUCT MASONRY WALL INCLUDING CONDITION AT WALL ENDS and OPENINGS PER DETAIL 1/S6.61 UNLESS DETAILED OTHERWISE. SOLID GROUT ALL CELLS IN MASONRY WALLS.
3. PROVIDE CHORD REINFORCING WITHIN 24" OF T.O.S. ELEVATION. ENSURE 72db STAGGERED LAP SPLICE. PROVIDE (2) #6 MINIMUM.
4. FACE PLATES and ROOF LEDGERS NOT SHOWN FOR CLARITY
5. ENSURE FIRST HORIZONTAL CMU BLOCK JOINT ALIGNS W/ FINISH FLOOR. CUT FIRST CMU BLOCK ABOVE FOOTING IF NECESSARY
6. NO OPENING LARGER THAN 6" DIA. OR 6" SQ. IN 8" CMU WALL MADE WITHOUT CUTTING WALL VERTICAL REINFORCING, IS PERMITTED UNLESS THE LOCATIONS and SIZES ARE SHOWN ON SHEAR WALL ELEVATIONS. SEE DETAIL 7/6.61 FOR LIMITATIONS OF OPENINGS MADE W/ OUT INTERUPTING REINFORCING.
7. PROVIDE CONT. CHORD BARS ABOVE THE FLOOR/ROOF IN THE CMU WALL.
8. SEE ARCHL DRAWINGS FOR CMU WALL CONTROL JOINT LAYOUT.
9. BAR DEVELOPMENT LENGTH REQUIREMENTS PER DETAIL 1/S6.61 NOTES.

LEGEND

DENOTES 8" THICK CONCRETE BLOCK SHEAR WALL SOLID GROUTED - FOR REINFORCING and OTHER INFORMATION SEE S6.61

IDENTIFICATION STAMP
DIV. OF THE STATE ARCHITECT
APP: 02-119490 INC:
REVIEWED FOR
SS ☑ FLS ☑ ACS ☑
DATE: 09/13/2022

INTERIORS
PLANNING

916-287-2400 Office

916-287-2401 Fax

LPADesignStudios.com

431 I Street,
Suite 107
Sacramento, California 95814

REGISTERED PROFESSIONAL ENGINEER
DANIEL S. WALTER
No. S-6837
Exp. 12/31/22
STRUCTURAL
STATE OF CALIFORNIA

This document and all other project documents, ideas, aesthetics and designs incorporated therein are instruments of service. All project documents are copyright protected, are the property of LPA, Inc. (LPA) and cannot be lawfully used in whole or in part for any project or purpose except as set forth in the contractual agreement between LPA and its Client. The unauthorized disclosure and/or use of the project documents (including the creation of derivative works), may give rise to liability for copyright infringement, unlawful disclosure, use or misappropriation of property rights held by LPA. The unauthorized use of the project documents will give rise to the recovery of monetary losses and damages including attorney fees and costs for which the unauthorized user will be held liable.
Project documents describe the design intent of the work and are not a representation of as-built or existing conditions. LPA is not responsible for any discrepancies between the project documents and the existing conditions.

© LPA, Inc.

DAVIS SR HIGH SCHOOL AQUATICS CENTER

315 W 14TH ST., DAVIS, CA 95616

Developed for
DAVIS JOINT UNIFIED SCHOOL DISTRICT

Revision	Date

Submittal	Date
50% DD REVIEW	06/15/2021
100% DD SUBMITTAL	07/26/2021
50% CD REVIEW	10/08/2021
100% CD DSA SUBMITTAL	10/22/2021

Job Number	1904413
Date Published	06/15/2021
Checked By	Checker
Scale	1/8" = 1'-0"

ELEVATIONS - POOL RESTROOM BUILDING

S3.02

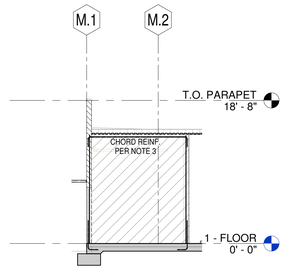

ELEVATION - POOL MECHANICAL BUILDING | 1/8" = 1'-0" | 08

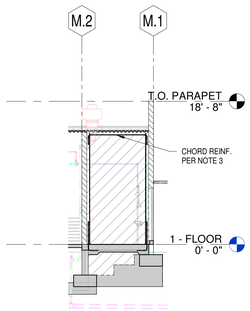

ELEVATION - POOL MECHANICAL BUILDING | 1/8" = 1'-0" | 11

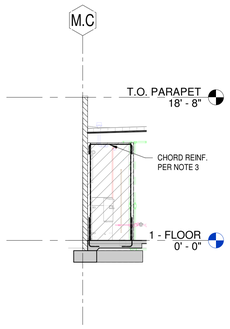

ELEVATION - POOL MECHANICAL BUILDING | 1/8" = 1'-0" | 07

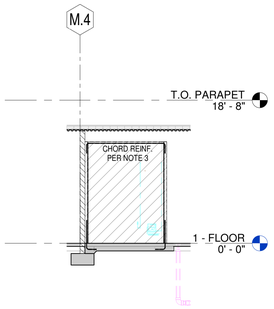

ELEVATION - POOL MECHANICAL BUILDING | 1/8" = 1'-0" | 10

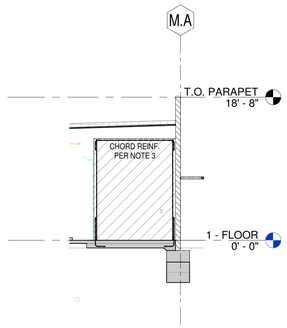

ELEVATION - POOL MECHANICAL BUILDING | 1/8" = 1'-0" | 06

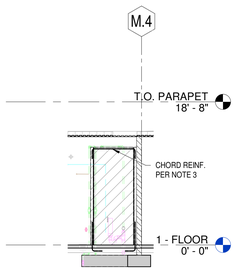

ELEVATION - POOL MECHANICAL BUILDING | 1/8" = 1'-0" | 09

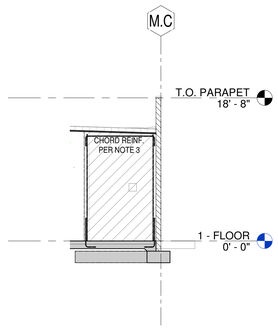

ELEVATION - POOL MECHANICAL BUILDING | 1/8" = 1'-0" | 05

CONCRETE BLOCK SHEAR WALL ELEVATION NOTES

1. SEE ARCHITECTURAL DRAWINGS FOR TOP OF CONCRETE SLAB ON GRADE and ELEVATED SLAB ELEVATIONS, DEPRESSIONS and SLOPES, WALL OVERALL DIMENSIONS and LOCATIONS OF OPENINGS NOT INDICATED ON STRUCTURAL DRAWINGS.
2. CONSTRUCT MASONRY WALL INCLUDING CONDITION AT WALL ENDS and OPENINGS PER DETAIL 1/S6.61 UNLESS DETAILED OTHERWISE. SOLID GROUT ALL CELLS IN MASONRY WALLS.
3. PROVIDE CHORD REINFORCING WITHIN 24" OF T.O.S. ELEVATION. ENSURE 72db STAGGERED LAP SPLICE. PROVIDE (2) #6 MINIMUM.
4. FACE PLATES and ROOF LEDGERS NOT SHOWN FOR CLARITY
5. ENSURE FIRST HORIZONTAL CMU BLOCK JOINT ALIGNS W/ FINISH FLOOR. CUT FIRST CMU BLOCK ABOVE FOOTING IF NECESSARY
6. NO OPENING LARGER THAN 6" DIA. OR 6" SQ. IN 8" CMU WALL MADE WITHOUT CUTTING WALL VERTICAL REINFORCING, IS PERMITTED UNLESS THE LOCATIONS and SIZES ARE SHOWN ON SHEAR WALL ELEVATIONS. SEE DETAIL 7/6.61 FOR LIMITATIONS OF OPENINGS MADE W/ OUT INTERUPTING REINFORCING.
7. PROVIDE CONT. CHORD BARS ABOVE THE FLOOR/ROOF IN THE CMU WALL.
8. SEE ARCHL DRAWINGS FOR CMU WALL CONTROL JOINT LAYOUT.
9. BAR DEVELOPMENT LENGTH REQUIREMENTS PER DETAIL 1/S6.61 NOTES.

LEGEND

DENOTES 8" THICK CONCRETE BLOCK SHEAR WALL SOLID GROUTED - FOR REINFORCING and OTHER INFORMATION SEE S6.61

IDENTIFICATION STAMP
DIV. OF THE STATE ARCHITECT
APP: 02-119490 INC:
REVIEWED FOR
SS ☑ FLS ☑ ACS ☑
DATE: 09/13/2022

INTERIORS
PLANNING

916-287-2400 Office

916-287-2401 Fax

LPADesignStudios.com

431 I Street,
Suite 107
Sacramento, California 95814

REGISTERED PROFESSIONAL ENGINEER
DANIEL S. WALTER
No. S4853
Exp. 12/31/22
STRUCTURAL
STATE OF CALIFORNIA

This document and all other project documents, ideas, aesthetics and designs incorporated therein are instruments of service. All project documents are copyright protected, are the property of LPA, Inc. (LPA) and cannot be lawfully used in whole or in part for any project or purpose except as set forth in the contractual agreement between LPA and its Client. The unauthorized disclosure and/or use of the project documents (including the creation of derivative works), may give rise to liability for copyright infringement, unlawful disclosure, use or misappropriation of property rights held by LPA. The unauthorized use of the project documents will give rise to the recovery of monetary losses and damages including attorney fees and costs for which the unauthorized user will be held liable.
Project documents describe the design intent of the work and are not a representation of as-built or existing conditions. LPA is not responsible for any discrepancies between the project documents and the existing conditions.

© LPA, Inc.

DAVIS SR HIGH SCHOOL AQUATICS CENTER

315 W 14TH ST., DAVIS, CA 95616

Developed for
DAVIS JOINT UNIFIED SCHOOL DISTRICT

Revision	Date

Submittal	Date
50% DD REVIEW	06/15/2021
100% DD SUBMITTAL	07/26/2021
50% CD REVIEW	10/08/2021
100% CD DSA SUBMITTAL	10/22/2021

Job Number	1904413
Date Published	06/15/2021
Checked By	Checker
Scale	1/8" = 1'-0"

ELEVATIONS - NON-BEARING CMU WALL - POOL MECHANICAL BUILDING

S3.03

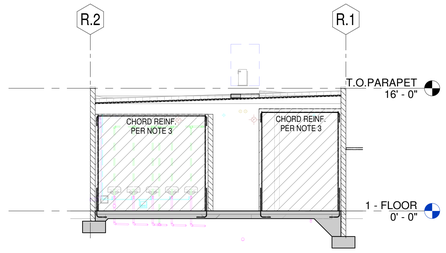

ELEVATION - RESTROOM | 1/8" = 1'-0" | 08

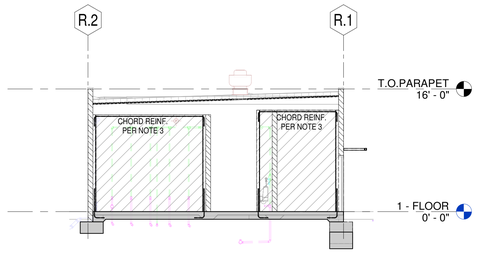

ELEVATION - RESTROOM | 1/8" = 1'-0" | 11

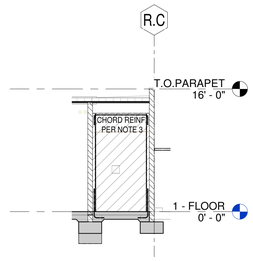

ELEVATION - RESTROOM | 1/8" = 1'-0" | 07

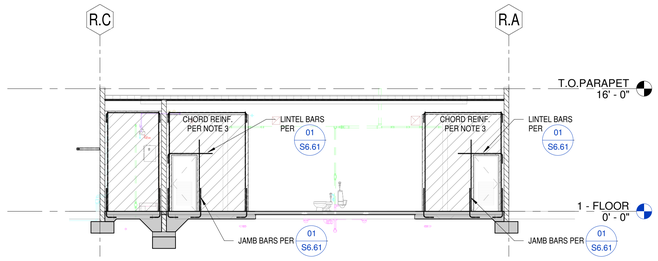

ELEVATION - RESTROOM | 06

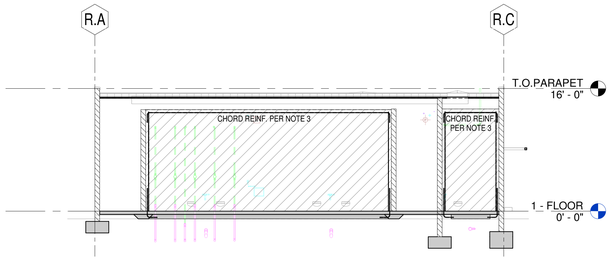

ELEVATION - RESTROOM | 05

CONCRETE BLOCK SHEAR WALL ELEVATION NOTES

1. SEE ARCHITECTURAL DRAWINGS FOR TOP OF CONCRETE SLAB ON GRADE and ELEVATED SLAB ELEVATIONS, DEPRESSIONS and SLOPES, WALL OVERALL DIMENSIONS and LOCATIONS OF OPENINGS NOT INDICATED ON STRUCTURAL DRAWINGS.
2. CONSTRUCT MASONRY WALL INCLUDING CONDITION AT WALL ENDS and OPENINGS PER DETAIL 1/S6.61 UNLESS DETAILED OTHERWISE. SOLID GROUT ALL CELLS IN MASONRY WALLS.
3. PROVIDE CHORD REINFORCING WITHIN 24" OF T.O.S. ELEVATION. ENSURE 72db STAGGERED LAP SPLICE. PROVIDE (2) #6 MINIMUM.
4. FACE PLATES and ROOF LEDGERS NOT SHOWN FOR CLARITY
5. ENSURE FIRST HORIZONTAL CMU BLOCK JOINT ALIGNS W/ FINISH FLOOR. CUT FIRST CMU BLOCK ABOVE FOOTING IF NECESSARY
6. NO OPENING LARGER THAN 6" DIA. OR 6" SQ. IN 8" CMU WALL MADE WITHOUT CUTTING WALL VERTICAL REINFORCING, IS PERMITTED UNLESS THE LOCATIONS and SIZES ARE SHOWN ON SHEAR WALL ELEVATIONS. SEE DETAIL 7/6.61 FOR LIMITATIONS OF OPENINGS MADE W/ OUT INTERUPTING REINFORCING.
7. PROVIDE CONT. CHORD BARS ABOVE THE FLOOR/ROOF IN THE CMU WALL.
8. SEE ARCHL DRAWINGS FOR CMU WALL CONTROL JOINT LAYOUT.
9. BAR DEVELOPMENT LENGTH REQUIREMENTS PER DETAIL 1/S6.61 NOTES.

LEGEND

DENOTES 8" THICK CONCRETE BLOCK SHEAR WALL SOLID GROUTED - FOR REINFORCING and OTHER INFORMATION SEE S6.61

IDENTIFICATION STAMP
DIV. OF THE STATE ARCHITECT
APP: 02-119490 INC:
REVIEWED FOR
SS ☑ FLS ☑ ACS ☑
DATE: 09/13/2022

INTERIORS
PLANNING

916-287-2400 Office

916-287-2401 Fax

LPADesignStudios.com

431 I Street,
Suite 107
Sacramento, California 95814

REGISTERED PROFESSIONAL ENGINEER
DANIEL S. WALTER
No. S4837
Exp. 12/31/22
STRUCTURAL
STATE OF CALIFORNIA

This document and all other project documents, ideas, aesthetics and designs incorporated therein are instruments of service. All project documents are copyright protected, are the property of LPA, Inc. (LPA) and cannot be lawfully used in whole or in part for any project or purpose except as set forth in the contractual agreement between LPA and its Client. The unauthorized disclosure and/or use of the project documents (including the creation of derivative works), may give rise to liability for copyright infringement, unlawful disclosure, use or misappropriation of property rights held by LPA. The unauthorized use of the project documents will give rise to the recovery of monetary losses and damages including attorney fees and costs for which the unauthorized user will be held liable.
Project documents describe the design intent of the work and are not a representation of as-built or existing conditions. LPA is not responsible for any discrepancies between the project documents and the existing conditions.

© LPA, Inc.

DAVIS SR HIGH SCHOOL AQUATICS CENTER

315 W 14TH ST., DAVIS, CA 95616

Developed for
DAVIS JOINT UNIFIED SCHOOL DISTRICT

Revision	Date

Submittal	Date
50% DD REVIEW	06/15/2021
100% DD SUBMITTAL	07/26/2021
50% CD REVIEW	10/08/2021
100% CD DSA SUBMITTAL	10/22/2021

Job Number	1904413
Date Published	06/15/2021
Checked By	Checker
Scale	1/8" = 1'-0"

ELEVATIONS - NON-BEARING CMU WALL - POOL RESTROOM BUILDING

S3.04

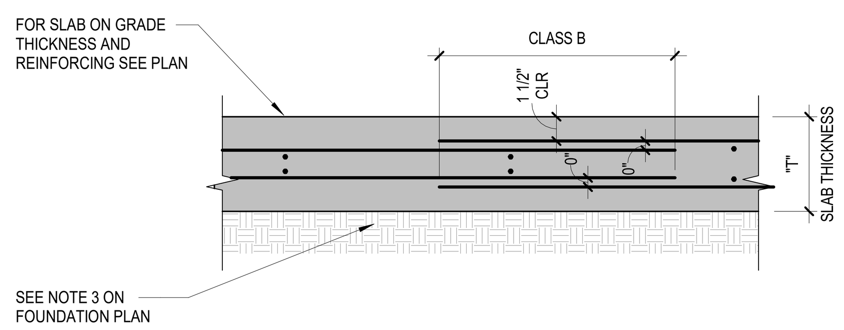

SECTION AT THICKEND SLAB ON GRADE

THICKENED SLAB ON GRADE | 1" = 1'-0" | 20

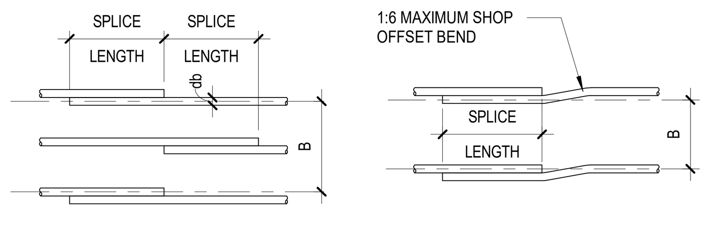

DIAGRAM AT STAGGERED SPLICES

DIAGRAM AT NON-STAGGERED SPLICES

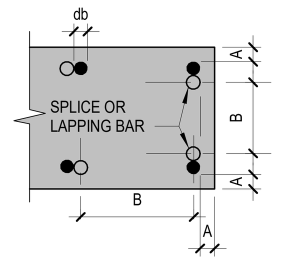

BAR SPACING DIAGRAM

LEGEND

A. CLEAR EDGE DISTANCE
B. CENTER TO CENTER SPACING OF SPLICED OR LAPPED BARS (SEE GENERAL NOTES ON SHEET S0.01, NOTE E.8 FOR MINIMUM CLEAR SPACING)
db - BAR DIAMETER

NOTES:

1. ALL SPLICES SHALL BE CLASS B SPLICES UNLESS INDICATED OTHERWISE. DEVELOPMENT Ld TO BE USED WHERE SPECIFICALLY INDICATED.
2. SCHEDULE APPLIES TO UNCOATED GRADE 60 BARS IN NORMAL WEIGHT CONCRETE.
3. TOP BARS (INDICATED "T" IN SCHEDULE) ARE HORIZONTAL BARS WITH MORE THAN 12" OF CONCRETE CAST BELOW THE BARS.
4. BOTTOM BARS (INDICATED "B" IN SCHEDULE) ARE ALL VERTICAL BARS AND HORIZONTAL BARS WITH LESS THAN 12" OF CONCRETE CAST BELOW HORIZONTAL BARS.
5. FOR LIGHTWEIGHT CONCRETE MULTIPLY LENGTHS IN SCHEDULE BY 1.33.

SCHEDULE FOR DETERMINING CATEGORY

I	II
1. A>db and B>2db and TIES THRUOUT Ld 2. A>db and B>3db	OTHER CASES

"CLASS B" TENSION LAP SPLICE SCHEDULE

CATEGORY	NORMAL WEIGHT CONCRETE f'c PSI	SPLICE OR DEVELOPMENT LENGTH (INCHES)																	
		0.375		0.500		0.625		0.750		0.875		1.000		1.128		1.270		1.410	
		#3		#4		#5		#6		#7		#8		#9		#10		#11	
		T	B	T	B	T	B	T	B	T	B	T	B	T	B	T	B	T	B
I	3000	28	22	38	29	47	36	56	43	81	63	93	72	105	81	118	91	131	101
	4000	25	19	33	25	41	31	49	37	71	54	81	62	91	70	102	79	114	87
II	3000	42	33	56	43	70	54	84	65	122	94	139	107	157	121	177	136	196	151
	4000	37	28	49	37	61	47	73	56	106	81	121	93	136	105	153	118	170	131
DEVELOPMENT "Ld" SCHEDULE																			
I	3000	22	17	29	22	36	28	43	33	63	48	72	55	81	62	91	70	101	78
	4000	19	15	25	19	31	24	37	29	54	42	62	48	70	54	79	61	87	67
II	3000	33	25	43	33	54	42	65	50	94	72	105	83	121	93	136	105	151	116
	4000	28	22	37	29	47	36	56	43	81	63	93	72	105	81	118	91	131	101

TYPICAL REBAR TENSION SPLICE and BAR DEVELOPMENT SCHEDULE (IN CONCRETE) | 08

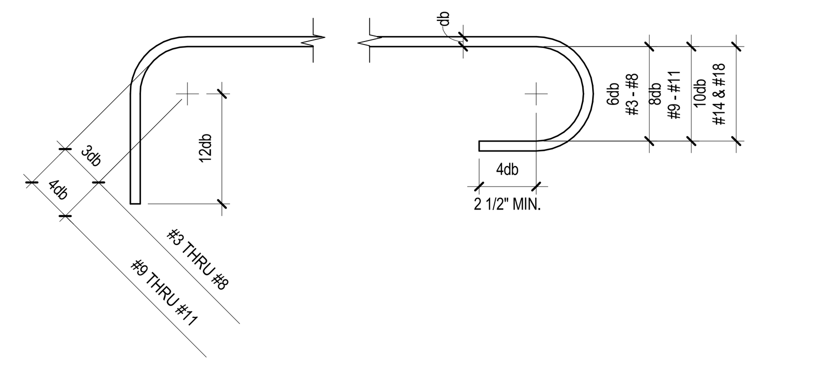

STANDARD HOOKS OTHER THAN STIRRUPS AND TIES

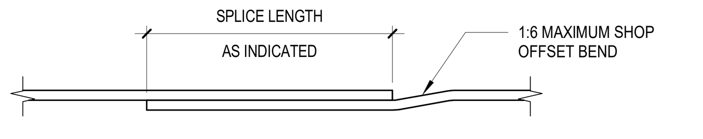

MAXIMUM OFFSET AT SPLICES

BAR DIAMETER DISTANCES

BAR DIAMETERS	BAR SIZE								
	#3	#4	#5	#6	#7	#8	#9	#10	#11
3db	1 1/8"	1 1/2"	1 7/8"	2 1/4"	2 5/8"	3"	-	-	-
4db	1 1/2"*	2"*	2 1/2"	3"	3 1/2"	4"	4 1/2"	5"	5 1/2"
6db	2 1/4"*	3"	3 3/4"	4 1/2"	5 1/4"	6"	-	-	-
8db	-	-	-	-	-	-	9"	10"	11"
12db	4 1/2"	6"	7 1/2"	9"	10 1/2"	12"	13 1/2"	15"	16 1/2"

* INDICATES MINIMUM DIMENSIONS MAY GOVERN

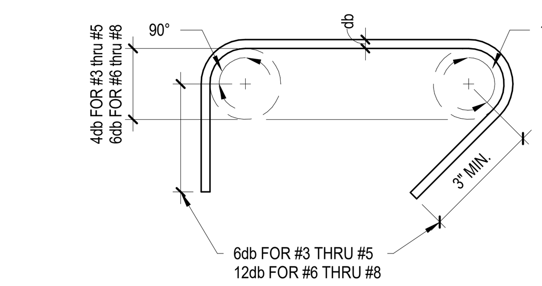

NOTE:
HOOKS OF TWO SUCCESSIVE STIRRUPS OR TIES ENGAGING SAME LONGITUDINAL BAR SHALL BE ALTERNATED END FOR END

STANDARD HOOKS FOR STIRRUPS AND TIES

TYPICAL REINFORCING STEEL HOOKS, BENDS and OFFSETS AT SPLICES | 3/4" = 1'-0" | 03

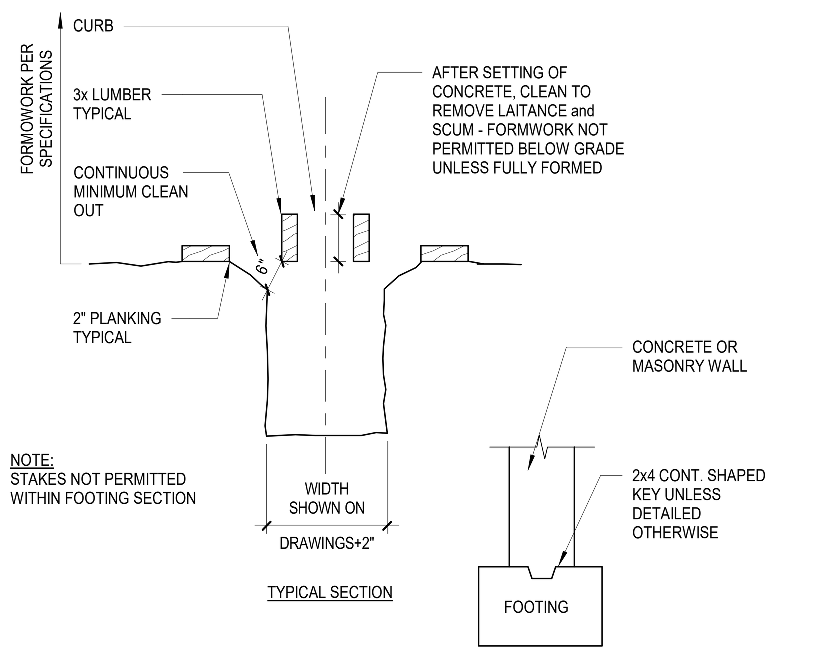

STARTER WALL DETAIL (A)

TYPICAL MANDATORY FOUNDATION FORWORK (UNLESS FULLY FORMED) | 3/4" = 1'-0" | 19

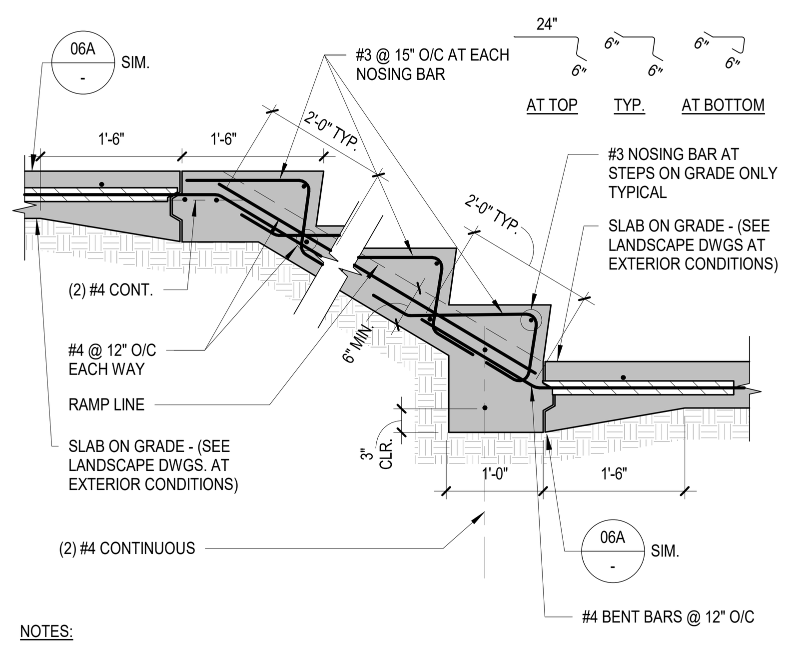

NOTES:

1. ADD #4 x 12', 36" DOWELS @ 12" O/C WHERE SIDE WALLS OCCUR AT STAIRS OR RAMP U.N.O.
2. SEE ARCHITECTURAL OR LANDSCAPE FOR TREAD and RISER GEOMETRY AND FINISHING

TYPICAL SECTION AT CONCRETE STEPS OR RAMP ON GRADE | 3/4" = 1'-0" | 15

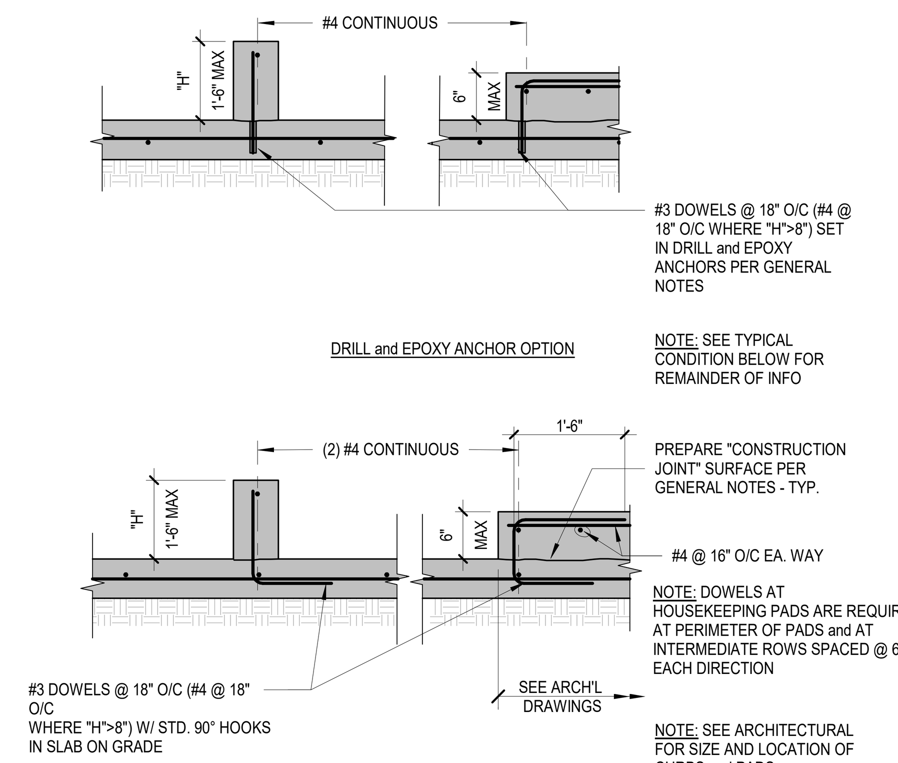

TYPICAL CONDITION
CONDITION AT CURB OR HOUSEKEEPING PAD (D)

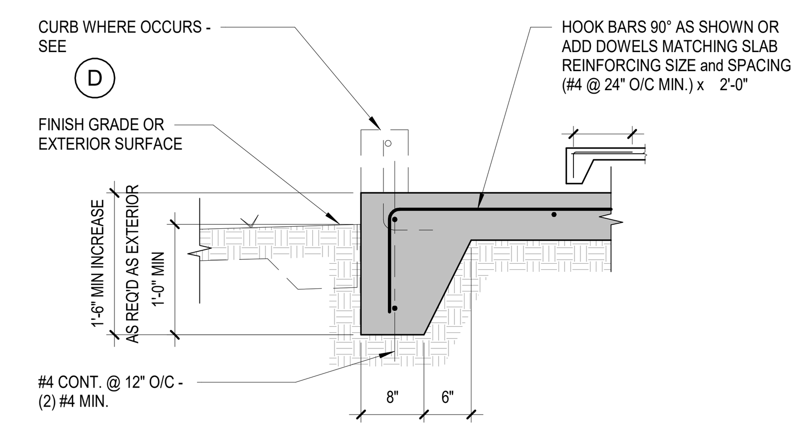

TURNED-DOWN SLAB EDGE (C)

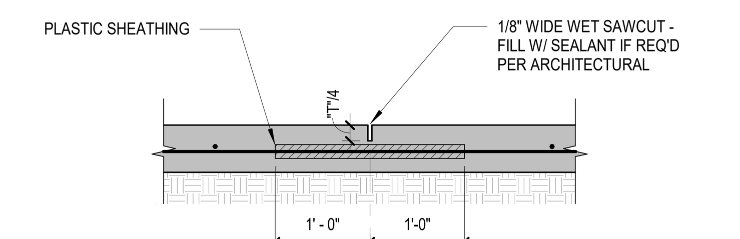

WEAKENED PLANE JOINT (B)

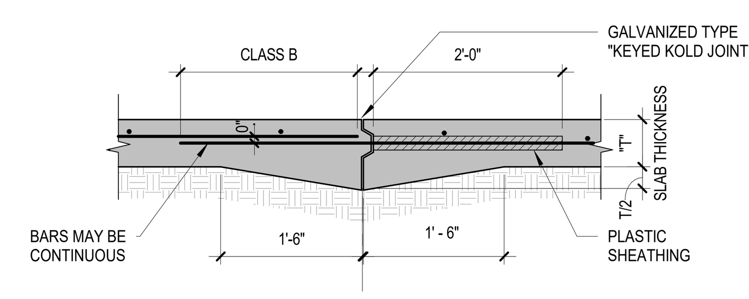

CONSTRUCTION JOINT (A)

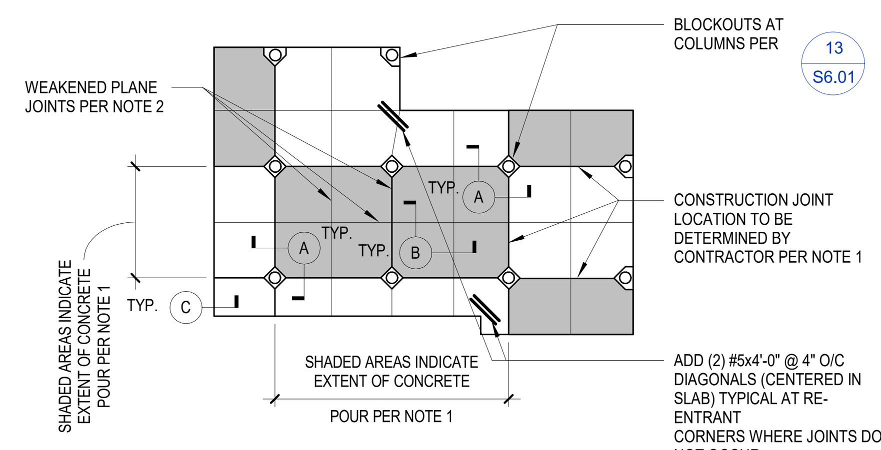

NOTES

1. AREA OF CONCRETE POURS TO BE DETERMINED BY CONTRACTOR. SUBMIT JOINT LAYOUT PRIOR TO POURING SLABS PER GENERAL NOTES. PROVIDE CONSTRUCTION JOINTS SURROUNDING AREA OF EACH POUR UNLESS DETAILED OTHERWISE. ALLOW 24 HOURS MINIMUM BEFORE CASTING SLABS AT ADJACENT AREAS.
2. SAWCUT WEAKENED PLANE JOINT AS SOON AS CONCRETE CAN SUPPORT WEIGHT OF PERSONNEL AND SAW WITHOUT AFFECTING FINAL FINISH BUT NO LATER THAN 12 HOURS AFTER POUR. LOCATE WEAKENED PLANE JOINTS NO GREATER THAN 24 TO 36 TIMES SLAB THICKNESS "T" (20'-0" MAXIMUM) IN BOTH DIRECTIONS, UNLESS NOTED OTHERWISE.

SLAB ON GRADE JOINT DIAGRAM (PLAN VIEW)

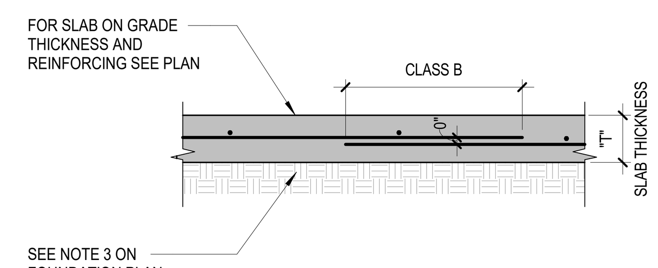

TYPICAL SECTION AT SLAB ON GRADE

TYPICAL SLAB ON GRADE DETAILS | 06

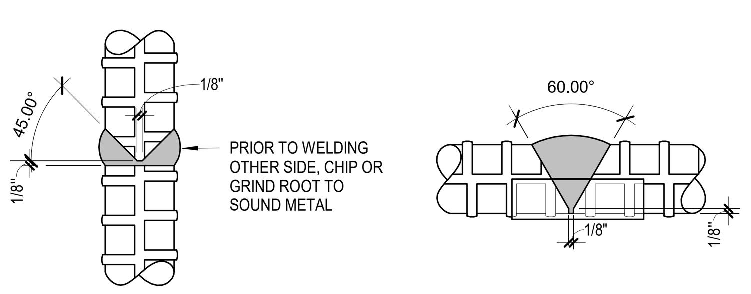

VERTICAL BAR

HORIZONTAL BAR

NOTES:

1. AS AN ALTERNATE TO LAP SPLICE, BUTT WELD MAY BE USED AS INDICATED ABOVE, PROVIDED THEY ARE STAGGERED @24" MINIMUM.
2. AN APPROVED TESTING LABORATORY SHALL PROVIDE A PREQUALIFICATION TENSION TEST FOR SAMPLES ON EVERY SIZE OF BAR BEING WELDED.
3. MATERIALS, CONDITIONS AND WELDING PROCEDURES UTILIZED SHALL COMPLY WITH THE CURRENT APPLICABLE BUILDING CODE AND THE REQUIREMENTS OF THE GOVERNING INSPECTION AGENCY.
4. GENERAL CONTRACTOR IS RESPONSIBLE FOR ALL COSTS INCURRED IN OBTAINING APPROVAL.

TYPICAL REINFORCING BUTT WELDS DETAIL (ALTERNATE TO SPLICES) | 3/4" = 1'-0" | 18

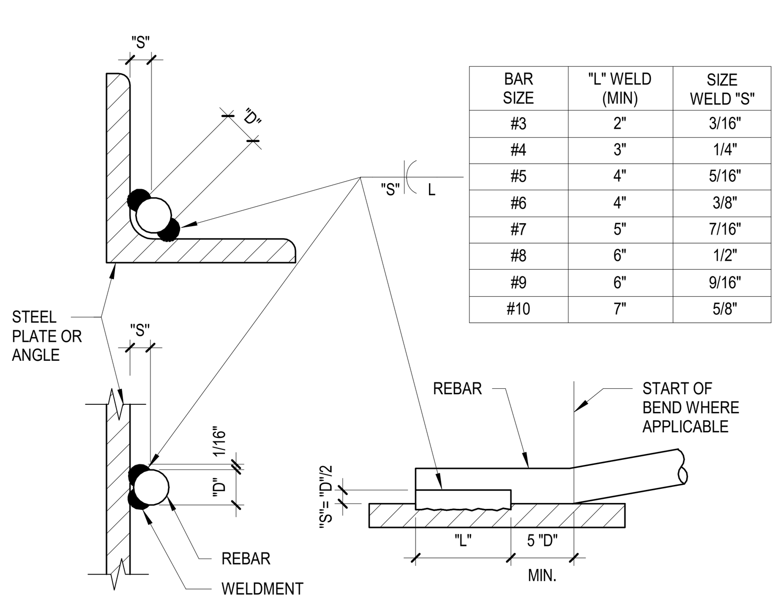

BAR SIZE	"L" WELD (MIN)	SIZE WELD "S"
#3	2"	3/16"
#4	3"	1/4"
#5	4"	5/16"
#6	4"	3/8"
#7	5"	7/16"
#8	6"	1/2"
#9	6"	9/16"
#10	7"	5/8"

NOTES

1. ALL REINFORCING WELDING SHALL BE IN ACCORDANCE WITH A.W.S. CODE D1.4-11 CURRENT EDITION.
2. WELDED REINFORCING SHALL CONFORM TO ASTM A706.
3. ASTM A615 REINFORCING STEEL MAY BE WELDED PROVIDED A CHEMICAL ANALYSIS IS PERFORMED TO DETERMINE CARBON EQUIVALENCY, TO ESTABLISH MINIMUM PREHEATING REQUIREMENTS. HEAT STICKS SHALL BE USED 6" FROM WELD TO VERIFY PREHEAT TEMPERATURES. CHEMICAL ANALYSIS REPORTS SHALL BE PROVIDED TO ARCHITECT (STRUCTURAL ENGINEER) PRIOR TO WELDING.

TYPICAL REBAR WELDING | 1" = 1'-0" | 17

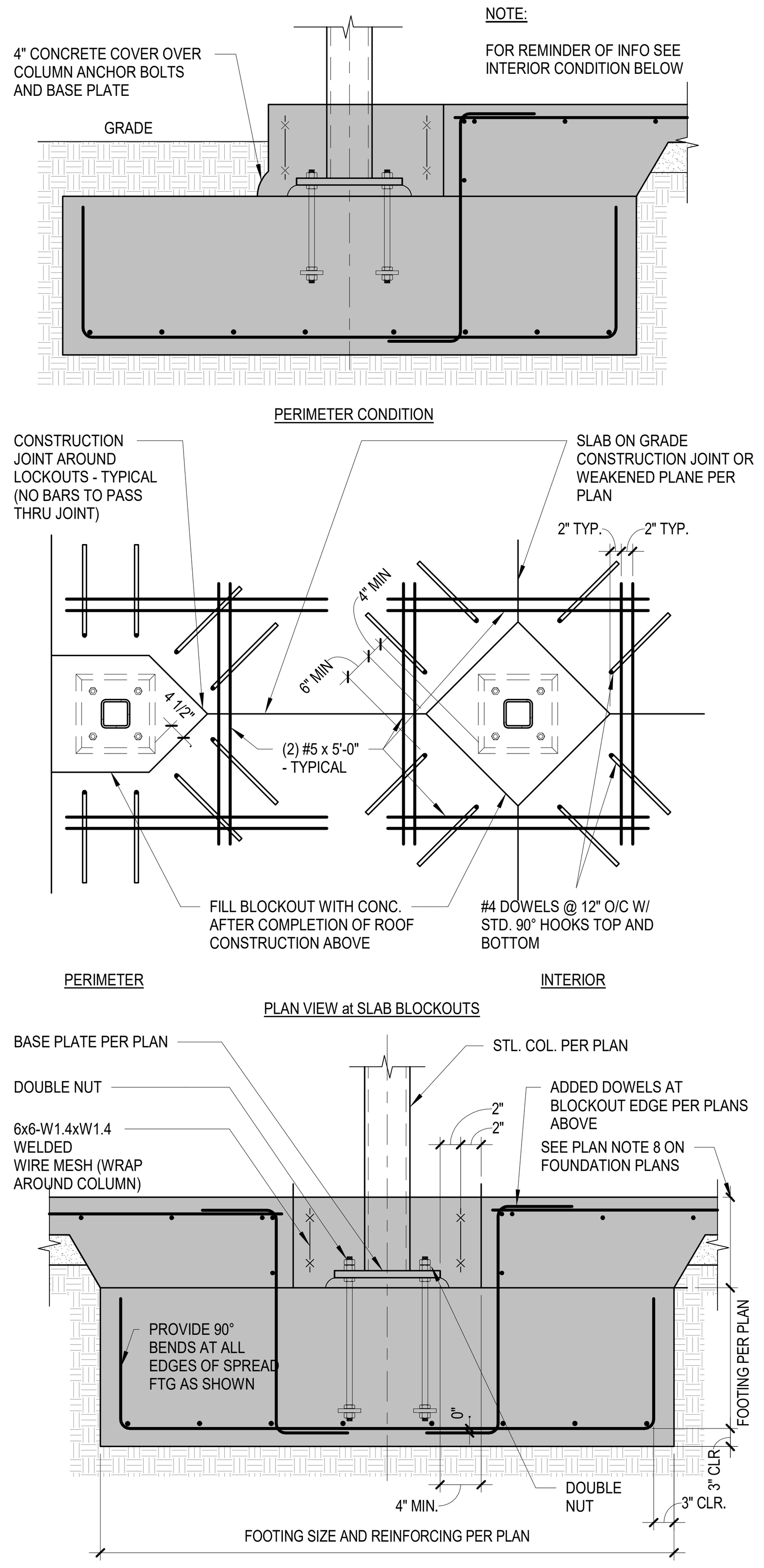

INTERIOR CONDITION

TYPICAL SPREAD FOOTING AT STEEL COLUMN | 3/4" = 1'-0" | 13

NOTE:
PIPES PASSING THROUGH/UNDER FOOTING SHALL MEET THE REQUIREMENTS OF 01 S6.01

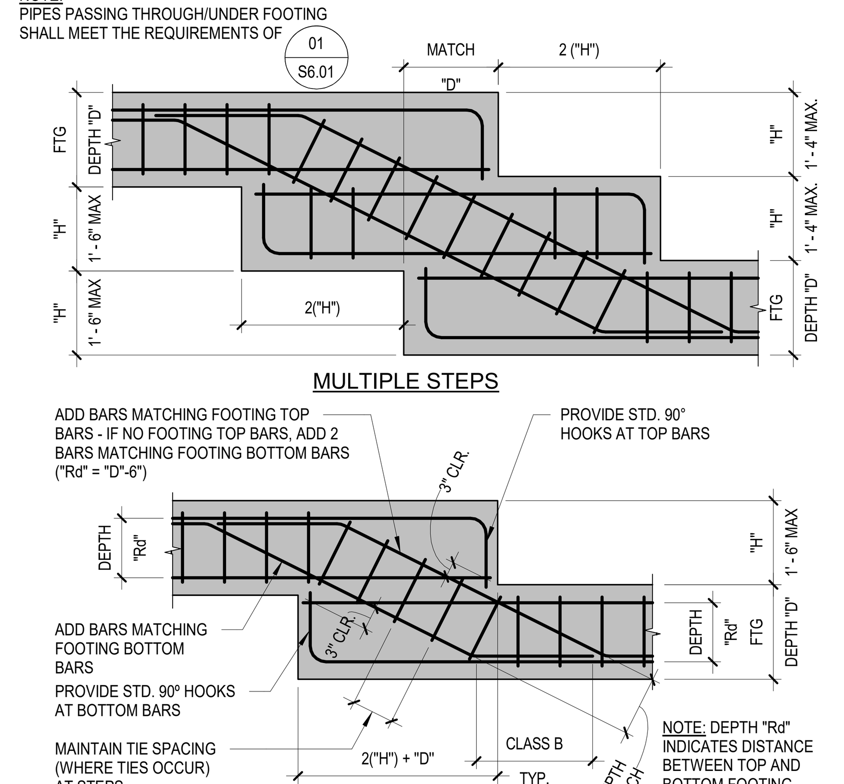

MULTIPLE STEPS

TYPICAL STEP

TYP. STEPPED FOOTING/GRADE BEAM DETAIL | 1/2" = 1'-0" | 09

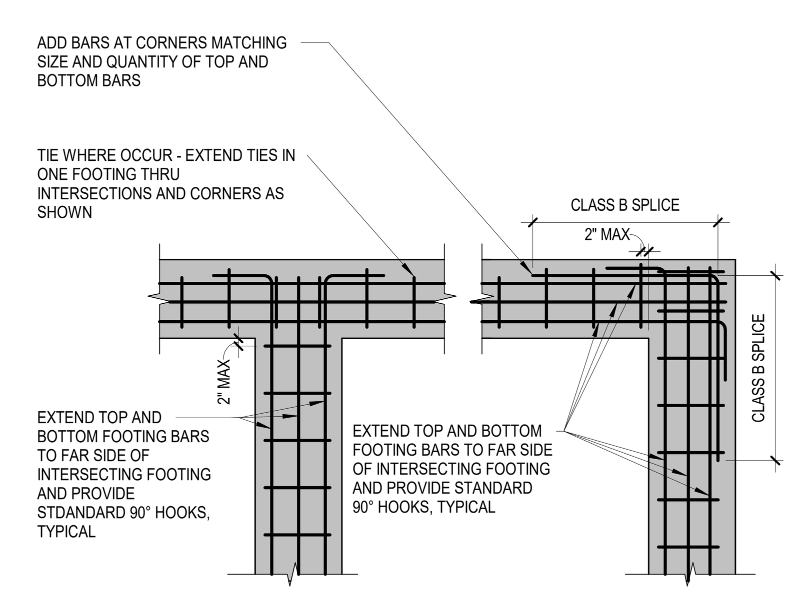

PLAN VIEW AT INTERSECTIONS

PLAN VIEW AT CORNERS

TYPICAL FOOTING REINFORCING AT CORNERS AND INTERSECTIONS | 3/4" = 1'-0" | 05

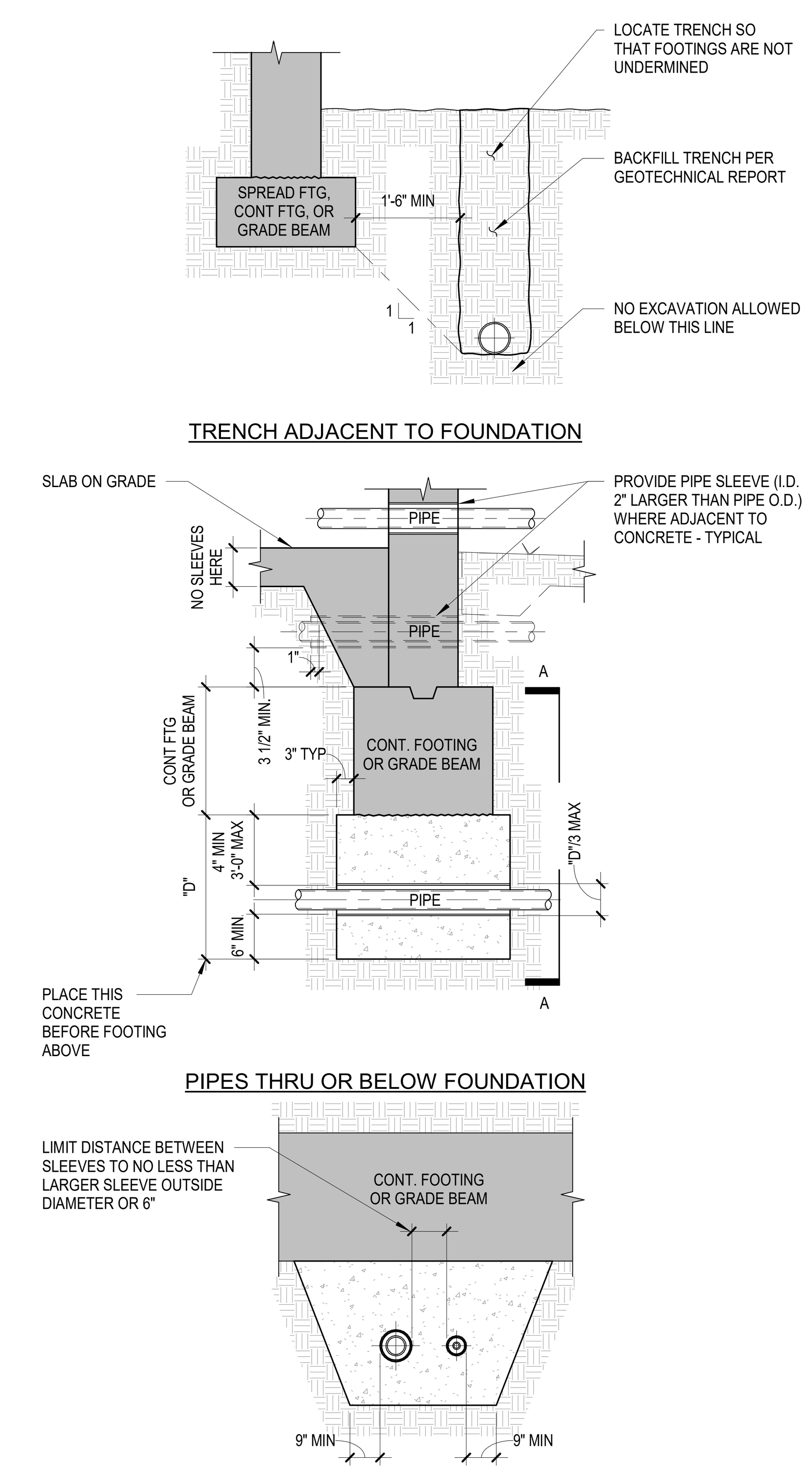

ELEVATION A-A

NOTES:

1. DO NOT PLACE SLEEVES OR CONDUIT IN ISOLATED SPREAD FOOTINGS - RUN AROUND OR BELOW THESE FOOTINGS.
2. SLEEVES ARE NOT TO PASS THROUGH CONTINUOUS FOOTINGS OR GRADE BEAMS UNLESS SHOWN OTHERWISE - WHERE SLEEVES ARE PERMITTED, LOCATE WITHIN MIDDLE THIRD OF FOOTING OR GRADE BEAM DEPTH.

TYP. PIPES THRU OR TRENCHES ADJACENT TO FOUNDATIONS | 3/4" = 1'-0" | 01

IDENTIFICATION STAMP
DIV. OF THE STATE ARCHITECT
APP: 02-119490 INC:
REVIEWED FOR
SS ☑ FLS ☑ ACS ☑
DATE: 09/13/2022

INTERIORS
PLANNING
916-287-2400 Office
916-287-2401 Fax
LPADesignStudios.com
431 I Street,
Suite 107
Sacramento, California 95814

REGISTERED PROFESSIONAL ENGINEER
DANIEL S. WANG
No. S4453
Exp. 12/31/22
STRUCTURAL
STATE OF CALIFORNIA

This document and all other project documents, ideas, arrangements and designs incorporated therein are instruments of service. All project documents are copyright protected, are the property of LPA, Inc. (LPA) and cannot be lawfully used in whole or in part for any project or purpose except as set forth in the contractual agreement between LPA and its Client. The unauthorized disclosure and/or use of the project documents (including the creation of derivative works), may give rise to liability for copyright infringement, unlawful disclosure, use or misappropriation of property rights held by LPA. The unauthorized use of the project documents will give rise to the recovery of monetary losses and damages including attorney fees and costs for which the unauthorized user will be held liable. Project documents describe the design intent of the work and are not a representation of as-built or existing conditions. LPA is not responsible for any discrepancies between the project documents and the existing conditions.

© LPA, Inc.

DAVIS SR HIGH SCHOOL AQUATICS CENTER

315 W 14TH ST., DAVIS, CA 95616

Developed for
DAVIS JOINT UNIFIED SCHOOL DISTRICT

Revision	Date

Submittal	Date
50% DD REVIEW	06/15/2021
100% CD SUBMITTAL	07/26/2021
50% CD REVIEW	10/08/2021
100% CD DSA SUBMITTAL	10/22/2021

Job Number	1904413
Date Published	06/15/2021
Checked By	Checker
Scale	

TYPICAL FOUNDATION AND SOG DETAILS

S6.01

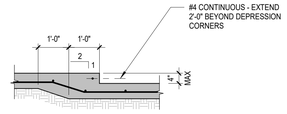

4" MAXIMUM (C)

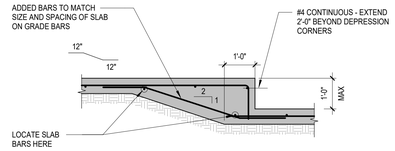

1'-0" MAXIMUM (B)

TYPICAL SECTIONS AT CHANGE IN SLAB ON GRADE ELEVATION (1'-0" MAXIMUM) | 12

HOOKED BAR DEVELOPMENT LENGTH (Ldh) SCHEDULE

BAR SIZE	Fc' = 3000psi	Fc' = 4000psi	Fc' = 5000psi
#3	9"	8"	7"
#4	11"	10"	9"
#5	14"	12"	11"
#6	17"	15"	13"
#7	20"	17"	15"
#8	22"	19"	17"
#9	25"	22"	20"
#10	28"	25"	22"
#11	31"	27"	24"

NOTES:
1. FOR LIGHT WEIGHT CONCRETE MULTIPLY THE SPECIFIED DEVELOPMENT LENGTH BY 1.3
2. FOR GR. 75 ksi REINFORCING MULTIPLY THE SPECIFIED DEVELOPMENT LENGTHS BY 1.25

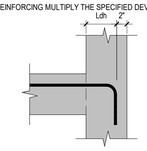

HOOKED BAR DEVELOPMENT LENGTH SCHEDULE | 1" = 1'-0" | 11

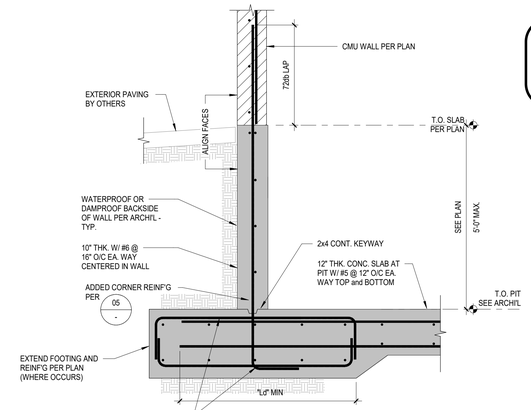

CONDITION ALONG PERIMETER CMU WALL (B)

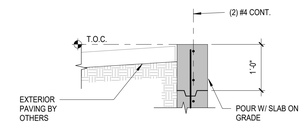

CONDITION (D)

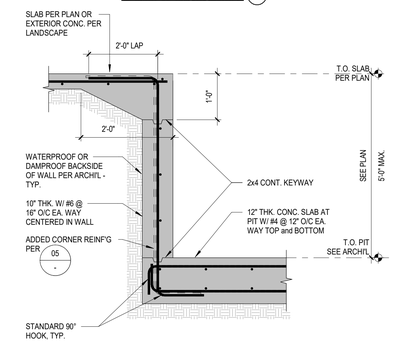

TYPICAL SECTION (A)

TYPICAL PUMP PIT DETAIL | 03

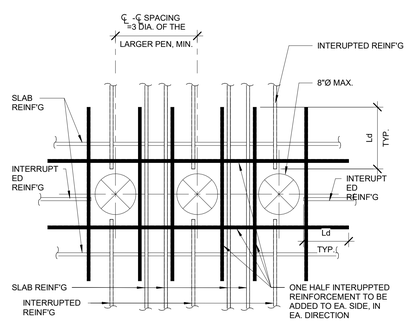

TYP. SLAB REINFORCING AT CONDUIT PENETRATIONS | 09

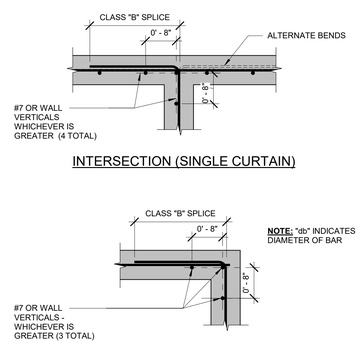

TYPICAL CONC. WALL AT CORNERS and INTERSECTIONS (PLAN VIEWS) | 05

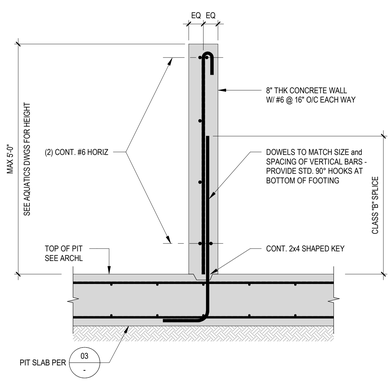

CONCRETE PIT WALL | 3/4" = 1'-0" | 01

IDENTIFICATION STAMP
DIV. OF THE STATE ARCHITECT
APP: 02-119490 INC:
REVIEWED FOR
SS ☑ FLS ☑ ACS ☑
DATE: 09/13/2022

INTERIORS
PLANNING

916-287-2400 Office
916-287-2401 Fax
LPADesignStudios.com
431 I Street,
Suite 107
Sacramento, California 95814

REGISTERED PROFESSIONAL ENGINEER DANIEL S. WALTER No. S4632 Exp. 12/31/22 STRUCTURAL STATE OF CALIFORNIA

This document and all other project documents, ideas, aesthetics and designs incorporated therein are instruments of service. All project documents are copyright protected, are the property of LPA, Inc. (LPA) and cannot be lawfully used in whole or in part for any project or purpose except as set forth in the contractual agreement between LPA and its Client. The unauthorized disclosure and/or use of the project documents (including the creation of derivative works), may give rise to liability for copyright infringement, unlawful disclosure, use or misappropriation of property rights held by LPA. The unauthorized use of the project documents will give rise to the recovery of monetary losses and damages including attorney fees and costs for which the unauthorized user will be held liable.
Project documents describe the design intent of the work and are not a representation of as-built or existing conditions. LPA is not responsible for any discrepancies between the project documents and the existing conditions.

© LPA, Inc.

DAVIS SR HIGH SCHOOL AQUATICS CENTER

315 W 14TH ST., DAVIS, CA 95616

Developed for
DAVIS JOINT UNIFIED SCHOOL DISTRICT

Revision	Date

Submittal	Date
50% DD REVIEW	06/15/2021
100% DD SUBMITTAL	07/26/2021
50% CD REVIEW	10/08/2021
100% CD DSA SUBMITTAL	10/22/2021

Job Number	1904413
Date Published	06/15/2021
Checked By	Checker
Scale	As indicated

TYPICAL FOUNDATION AND SOG DETAILS

S6.02

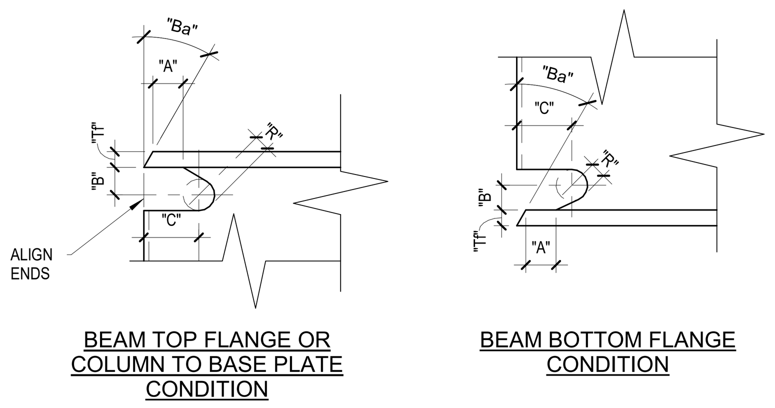

LEGEND:

A	LARGER OF Tf OR 1/2" (PLUS 1/2Tf, OR MINUS 1/4Tf)
B	3/4Tf to Tf, 3/4" MINIMUM (±1/4")
Ba	BEVEL ANGLE AS REQUIRED FOR SELECTED GROOVE WELD PROCEDURE
C	3Tf (±1/2")
R	3/8" MINIMUM RADIUS (PLUS NOT LIMITED, OR MINUS 0)
Tf	FLANGE THICKNESS

NOTE: TOLERANCES SHALL NOT ACCUMULATE TO EXTENT THAT ANGLE OF ACCESS HOLE CUT TO FLANGE SURFACE EXCEEDS 25°

TYP. ENLARGED DETAIL AT WELD ACCESS HOLE | 3" = 1'-0" | 20

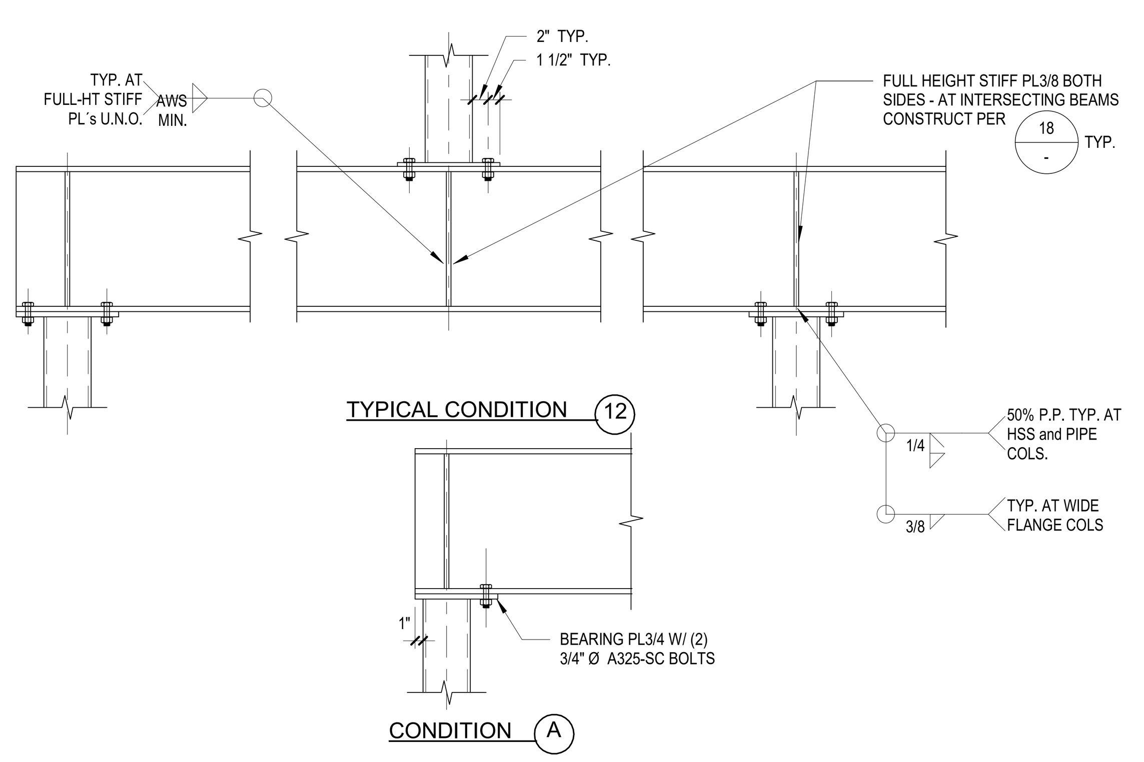

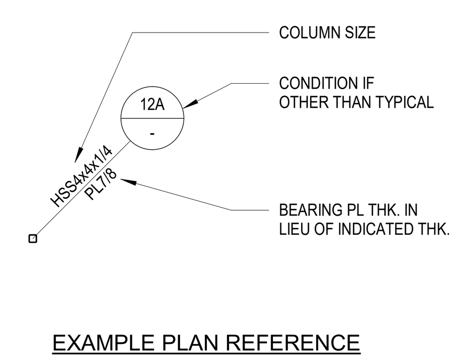

NOTES:

1. PROVIDE 1/2" THICK BEARING PLATES W/ 3/4"Ø A325-SC BOLTS UNLESS NOTED OTHERWISE.
2. BEARING PLATES SHALL BE AS WIDE AS SUPPORTING SURFACE AND SHALL BE 1" MINIMUM WIDER ON EACH SIDE OF HSS OR PIPE COLUMN.

TYPICAL BEAM TO HSS OR PIPE COLUMN CONNECTIONS | 12

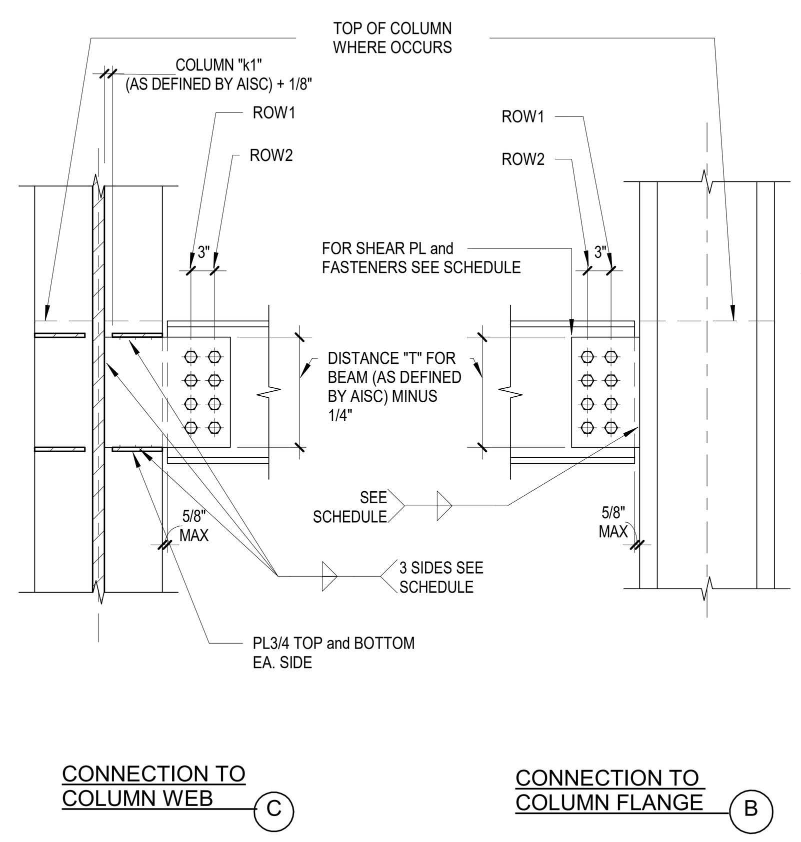

BEAM SIZE	QUANTITY 1"Ø A490-SC H.S.B.'s		SHEAR PLATE THK.	WELD (BOTH SIDES)
	ROW 1	ROW 2		
W12x and W14x	3	3	1/2	3/8
W16x	4	4	1/2	3/8
W18x	4	4	1/2	3/8

DRAG CONNECTION SCHEDULE

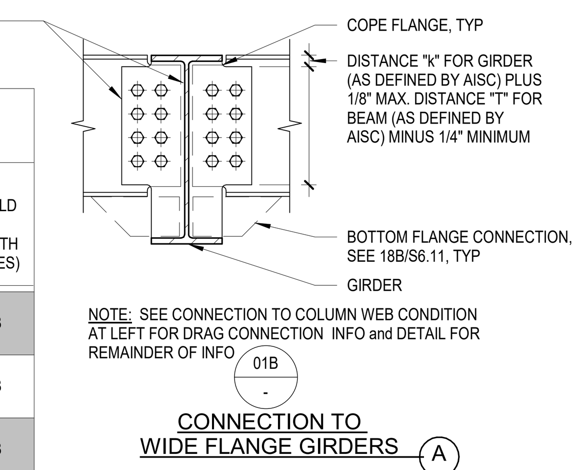

NOTE: SEE CONNECTION TO COLUMN WEB CONDITION AT LEFT FOR DRAG CONNECTION INFO and DETAIL FOR REMAINDER OF INFO 01B/-

CONNECTION TO WIDE FLANGE GIRDERS (A)

NOTES:

1. PROVIDE THESE DRAG CONNECTIONS WHERE DENOTED ON PLAN THUS
2. FILLET WELD SIZES SHOWN ARE MINIMUM WELD SIZES. WHERE WELD SIZES SHOWN ARE SMALLER THAN AWS MINIMUM WELD SIZE, USE AWS MINIMUM WELD SIZE.
3. PROVIDE CONNECTION PLATES CONFORMING TO ASTM A572, GRADE 50.
4. ALL DRAG CONN. MEMBERS ARE PART OF SFRS.
5. WHERE DRAG CONN. OCCURS AT HSS COL., SEE 05/S6.15 SIM.

TYPICAL DRAG CONNECTION SCHEDULE and DETAILS | 04

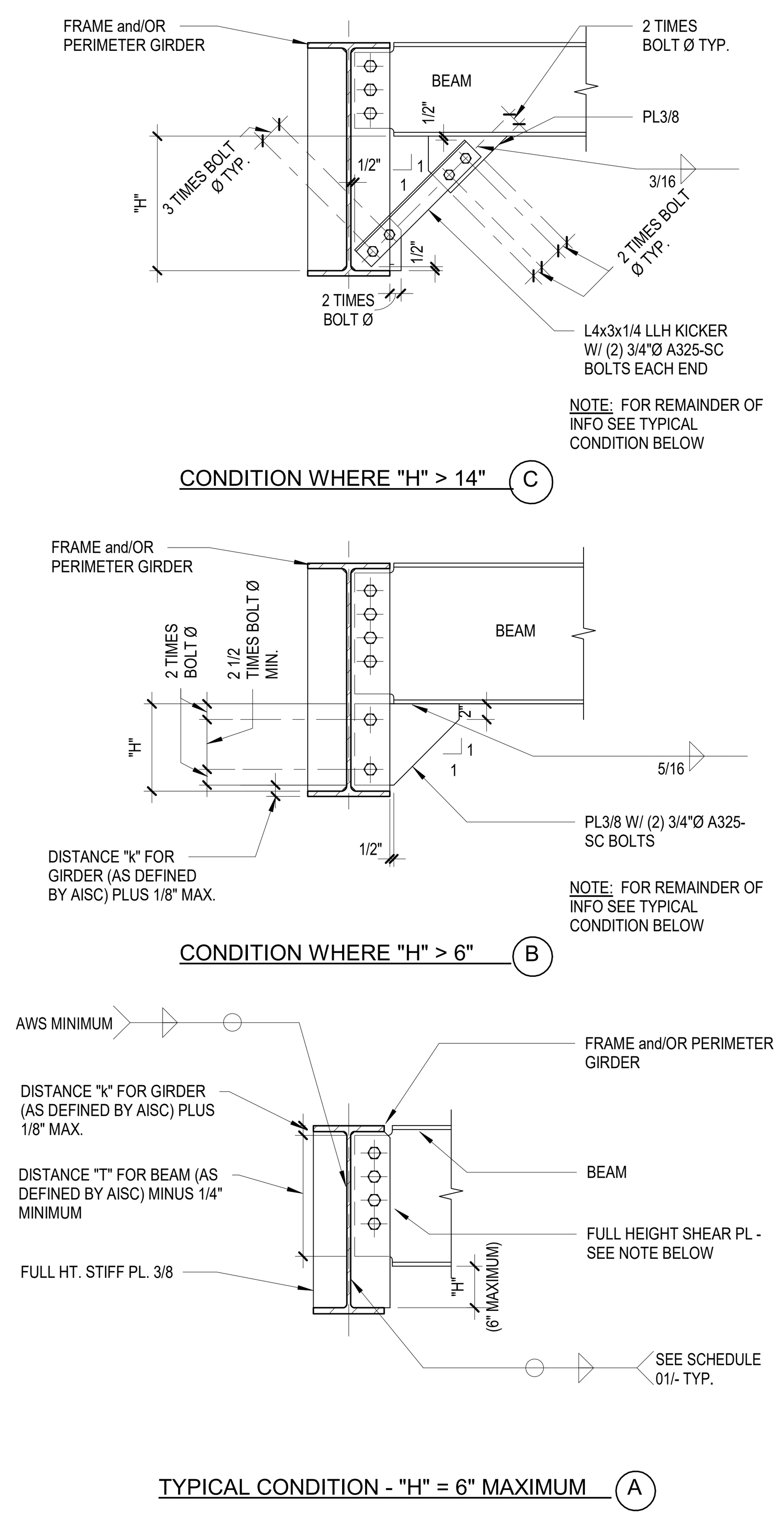

NOTE: SEE DETAIL 01B/- FOR FULL HEIGHT SHEAR PLATE THICKNESS/GEOMETRY and QUANTITY OF FASTENERS EXCEPT USE 1"Ø A490-SC BOLTS IN LIEU OF BEARING TYPE BOLTS

TYPICAL BOTTOM FLANGE BRACE AT PERIMETER and FRAME BEAMS | 3/4" = 1'-0" | 18

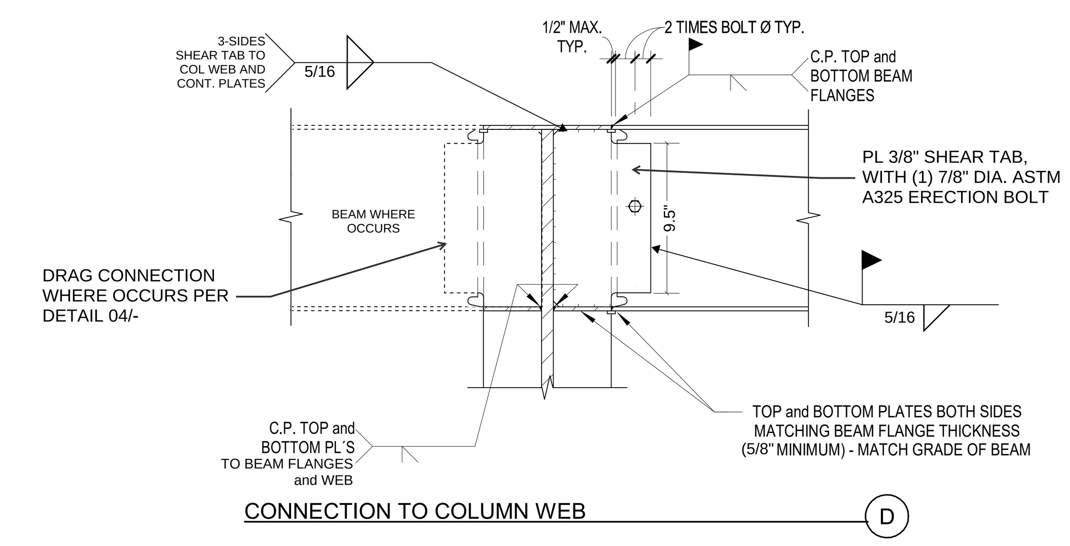

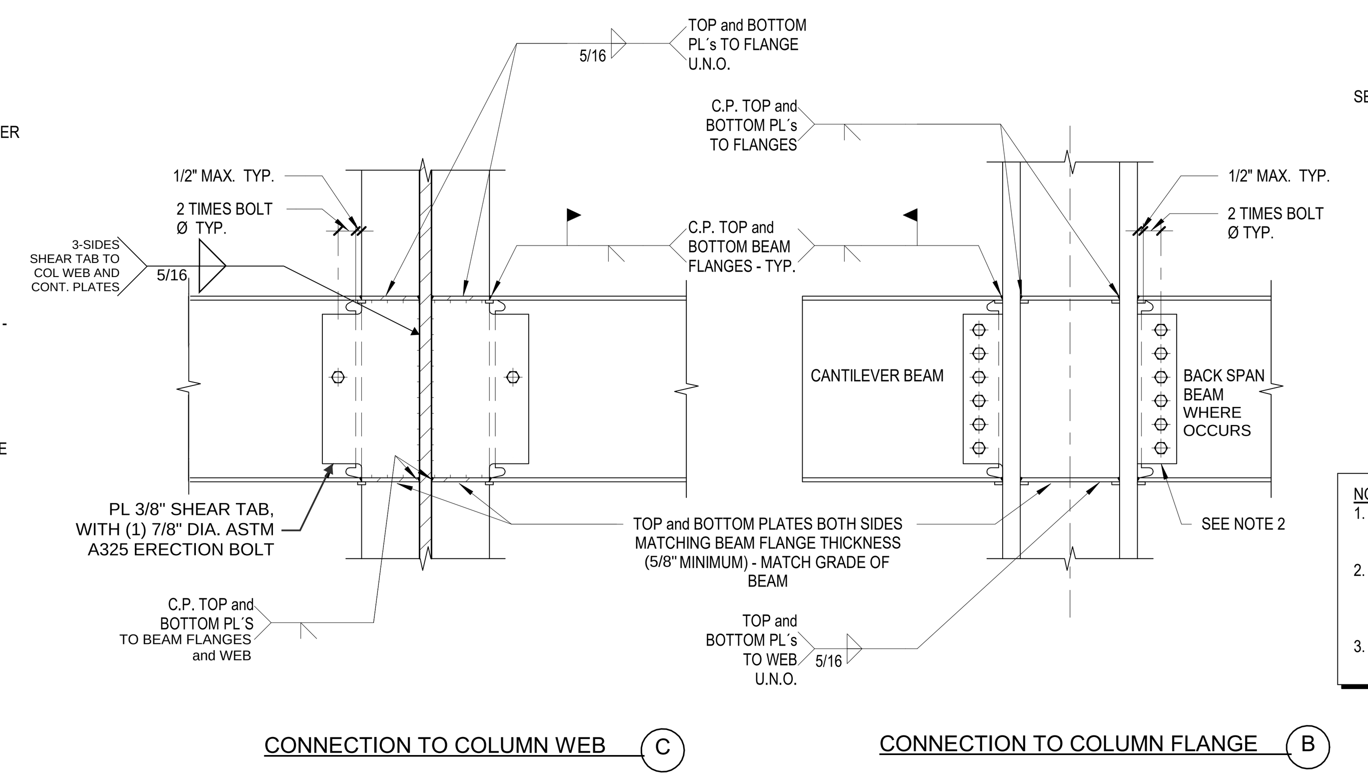

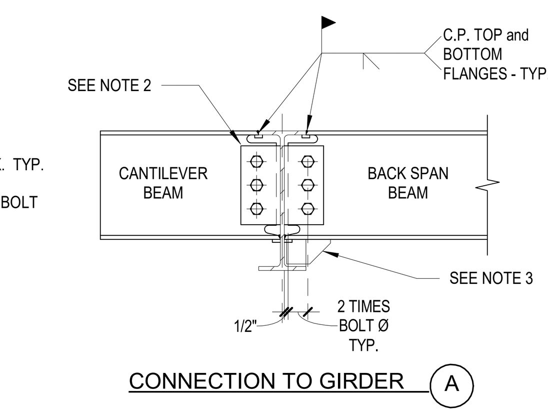

NOTES:

1. PROVIDE THESE MOMENT CONNECTIONS WHERE DENOTED ON PLAN THUS
2. SEE DETAIL 01/- FOR SHEAR PLATE THICKNESS/GEOMETRY, SHEAR PLATE WELDING and QUANTITY OF FASTENERS EXCEPT USE 1"Ø A490-SC BOLTS IN LIEU OF BEARING TYPE BOLTS
3. ADD PLATE OR KICKER PER 18B/- OR 18C/- AT DRAG BEAMS.

TYPCIAL ORDINARY MOMENT CONNECTION | 10

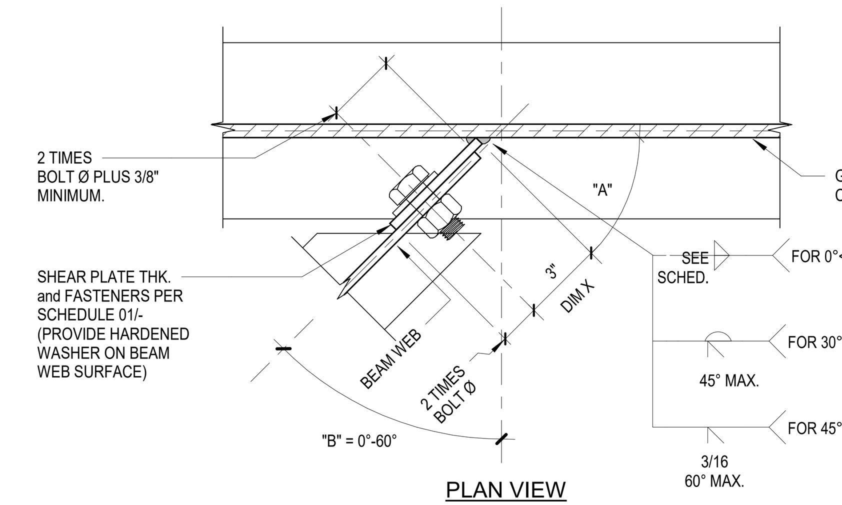

NOTES:

1. AT GROOVE WELDS, BEVEL END OF SHEAR PLATE TO MAINTAIN ANGLE "A" AT 45°.
2. DO NOT INCREASE DIMENSION "X" WITHOUT WRITTEN ACCEPTANCE FROM ARCHITECT (STRUCTURAL ENGINEER).
3. PROVIDE AISC DEFINED HORIZONTAL SHORT SLOTTED HOLES IN BEAM WEB AT CONNECTIONS TO COLUMNS.

SKEWED BEAM CONNECTION SCHEDULE

BEAM SIZE	SHEAR PLATE WELDS: WELD 0° < B ≤ 10°	SHEAR PLATE WELDS: WELD 10° < B ≤ 30°	SHEAR PLATE WELDS: WELD "S"
W6x,C6x	S / S+1/16	S / S+1/18	5/16"
W8x, W10x C8x, C10x			5/16"
W12x, C12x, MC12x, W14x			5/16"
W16x, W18x			5/16"
W21x			3/8"
W24x		45°	3/8"
W27x			3/8"
W30x			3/8"

TYPICAL SKEWED BEAM to SUPPORT CONNECTIONS | 02

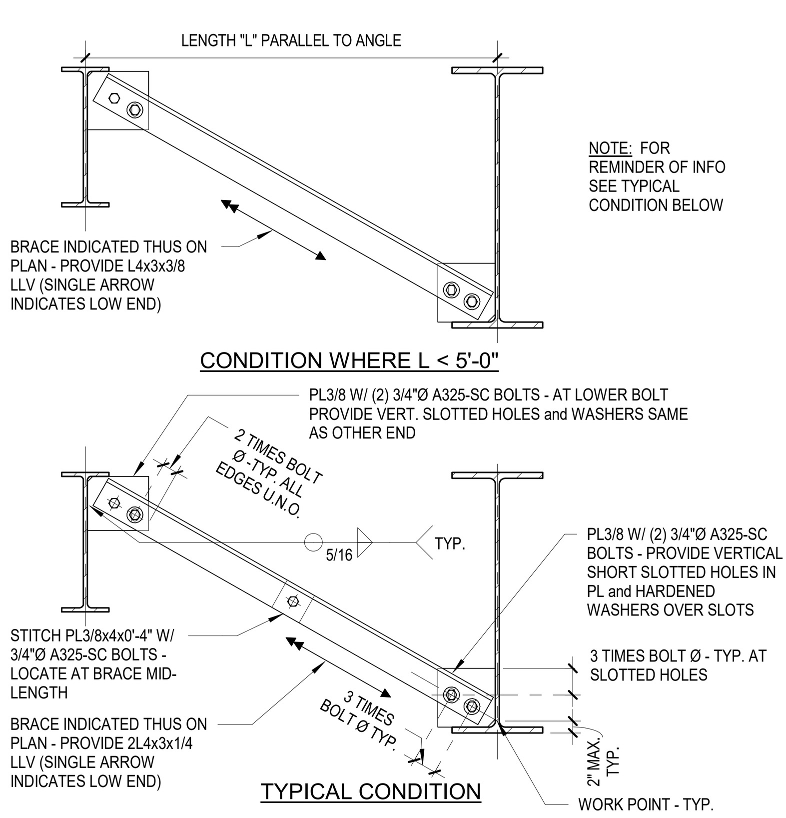

TYPICAL BOTTOM FLANGE BRACE (BRACE PERP. TO BOTH BEAMS) | 3/4" = 1'-0" | 17

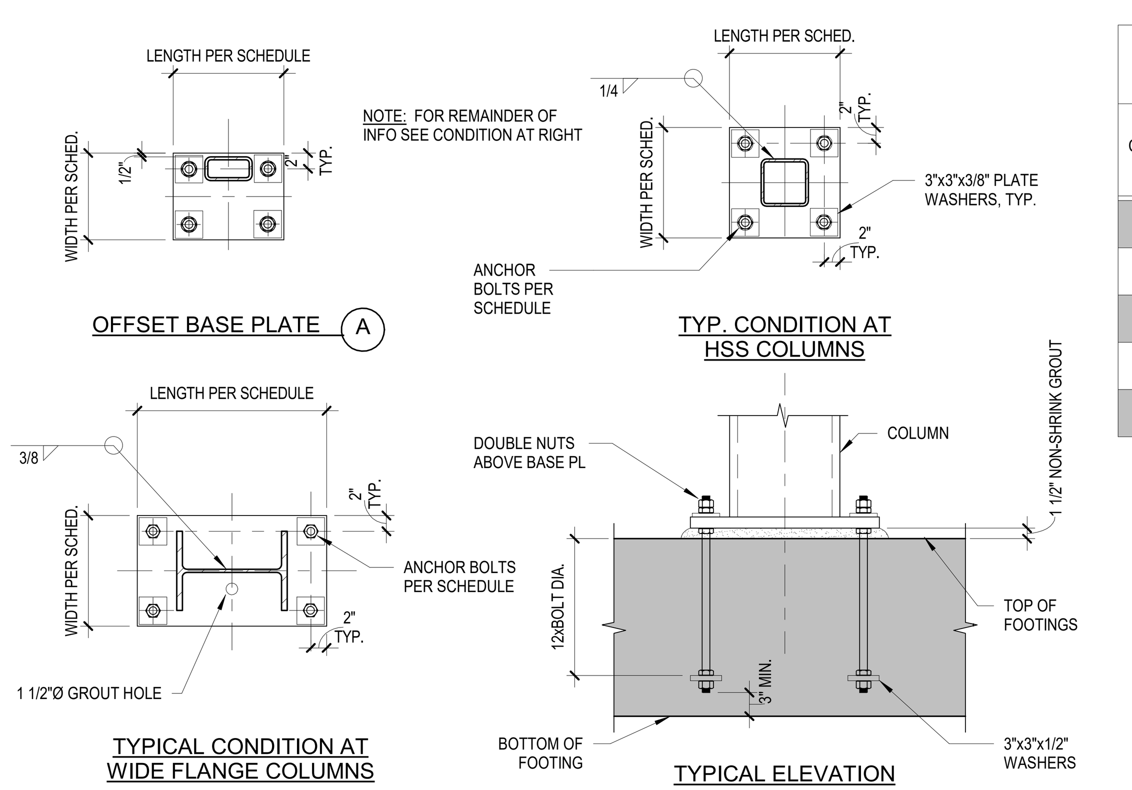

BASE PLATE SCHEDULE

COLUMN SIZE	BASE PLATE: THK.	BASE PLATE: WIDTH	BASE PLATE: LENGTH	BASE PLATE: ANCHOR BOLTS
HSS6X6	1"	14"	14"	(4) 1"Ø

NOTE:

1. FINISH WIDE FLANGE COLUMN ENDS IN ACCORDANCE TO AISC CODE OF TANDARD PRACTICE SECTION 6.2.2.
2. WHERE OVERSIZED HOLES ARE NOT USED IN BASE PLATE, PLATE WASHERS CAN BE OMITTED.

TYPICAL NON-FRAME COLUMN BASE PLATE DETAILS and SCHEDULE | 09

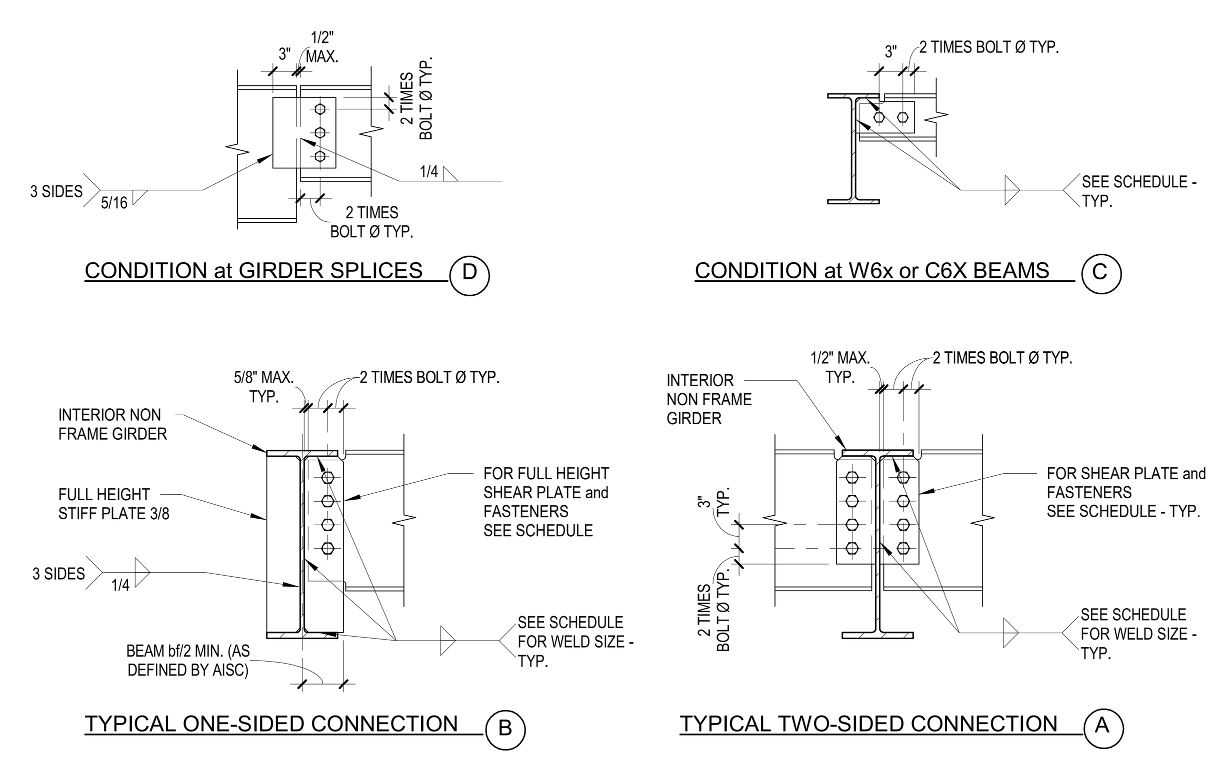

CONNECTION SCHEDULE

BEAM SIZE	A325-N H.S.B.	SHEAR PLATE THK.	WELD (BOTH SIDES)
W6x,C6x	(2) 7/8"Ø	3/8"	5/16"
W8x, W10x C8x, C10x	(2) 7/8"Ø	3/8"	5/16"
W12x, C12x MC12x, W14x	(3) 7/8"Ø	3/8"	5/16"
W16x, W18x	(4) 7/8"Ø	3/8"	5/16"
W21x	(5) 7/8"Ø	1/2"	3/8"
W24x	(6) 7/8"Ø	1/2"	3/8"
W27x	(7) 7/8"Ø	1/2"	3/8"
W30x	(8) 7/8"Ø	1/2"	3/8"

TYPICAL BEAM to GIRDER CONNECTIONS | 01

IDENTIFICATION STAMP
DIV. OF THE STATE ARCHITECT
APP: 02-119490 INC:
REVIEWED FOR
SS ☑ FLS ☑ ACS ☑
DATE: 09/13/2022

INTERIORS
PLANNING
916-287-2400 Office
916-287-2401 Fax
LPADesignStudios.com
431 I Street,
Suite 107
Sacramento, California 95814

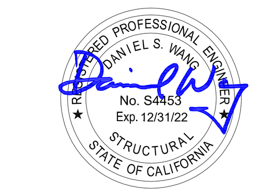

This document and all other project documents, ideas, aesthetics and designs incorporated therein are instruments of service. All project documents are copyright protected, are the property of LPA, Inc. (LPA) and cannot be lawfully used in whole or in part for any project or purpose except as set forth in the contract agreement between LPA and its Client. The unauthorized disclosure and/or use of the project documents (including the creation of derivative works), may give rise to liability for copyright infringement, unlawful disclosure, use or misappropriation of property rights held by LPA. The unauthorized use of the project documents will give rise to the recovery of monetary losses and damages including attorney fees and costs for which the unauthorized user will be liable. Project documents describe the design intent of the work and are not a representation of as-built or existing conditions. LPA is not responsible for any discrepancies between the project documents and the existing conditions.

© LPA, Inc.

DAVIS SR HIGH SCHOOL AQUATICS CENTER

315 W 14TH ST., DAVIS, CA 95616

Developed for
DAVIS JOINT UNIFIED SCHOOL DISTRICT

Submittal	Date
50% DD REVIEW	06/15/2021
100% CD SUBMITTAL	07/26/2021
50% CD REVIEW	10/08/2021
100% CD DSA SUBMITTAL	10/22/2021

Revision	Date

Job Number	1904413
Date Published	06/15/2021
Checked By	Checker
Scale	As indicated

TYPICAL STRUCTURAL STEEL DETAILS

S6.11

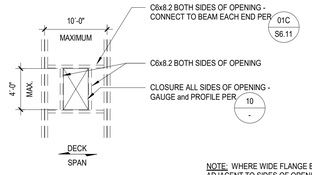

PLAN

NOTE: WHERE WIDE FLANGE BEAMS OCCUR ADJACENT TO SIDES OF OPENING, PROVIDE CLOSURE PER 01 S6.13 OR 03 S6.13

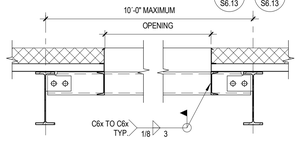

SECTION AT BARE DECK (NO CONCRETE FILL)

TYPICAL OPENINGS IN FLOOR and ROOF DECKS UP TO 4'-0" WIDE | 3/4" = 1'-0" | 12

NOTES:

1. DO NOT CUT MORE THAN 2 ADJACENT WEBS.
2. HOLES LESS THAN 6" IN DIAMETER AND CUTTING NO MORE THAN 1 WEB NEED NO REINFORCING.
3. ANGLES SHALL BE PLACED ON TOP OF DECK.
4. IF DIMENSION "A" IS GREATER THAN 4D1, 4D2, OR 32" WHICHEVER IS LARGER, THEN THERE IS NO RESTRICTION ON DIMENSION "B".
5. IF DIMENSION "B" IS GREATER THAN 4D1, 4D2, OR 32" WHICHEVER IS LARGER, THEN THERE IS NO RESTRICTION ON DIMENSION "A".
6. IF DIMENSIONS "A" AND "B" ARE LESS THAN 4D1, 4D2, OR 32" WHICHEVER IS LARGER, THE OPENING GROUP WILL BE CONSIDERED AS A SINGLE HOLE, AND MUST BE REINFORCED AS REQUIRED FOR THE LARGER OPENING.
7. IF DIMENSION 'E' IS LESS THAN 12", OMIT L1-3/4" ANGLE ON BEAM SIDE.
8. IF LEDGER ANGLE OR FRAMING BEAM ENCROACH ON L1-3/4" ANGLE, THEN SUPPORT ANGLE MAY BE WELDED TO LEDGER OR BEAM WITH A 1/4" FILLET WELD ALL AROUND.

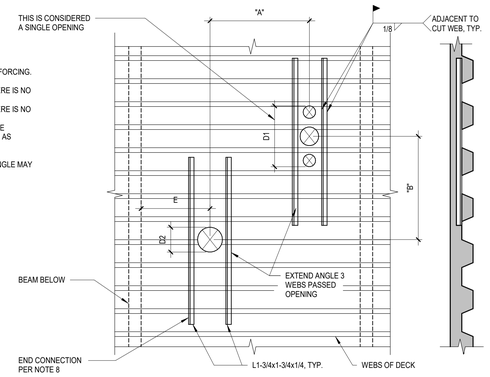

DECK REINFORCING AT SMALL OPENINGS | 04

CLOSURE PROFILE PARALLEL TO DECK SPAN

CLOSURE PROFILE PERPENDICULAR TO DECK SPAN

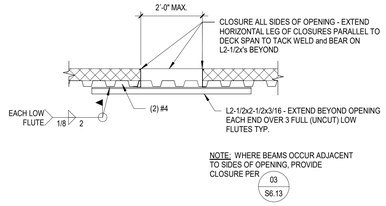

NOTE: WHERE BEAMS OCCUR ADJACENT TO SIDES OF OPENING, PROVIDE CLOSURE PER 03 S6.13

SECTION AT BARE DECK (NO CONCRETE FILL)

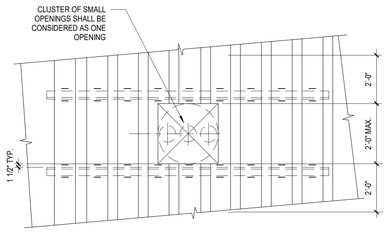

PLAN

TYPICAL OPENINGS IN FLOOR and ROOF DECKS UP TO 2'-0" SQUARE | 3/4" = 1'-0" | 10

FLOOR and ROOF CONSTRUCTION SCHEDULE

MARK	METAL DECKING	TOTAL SLAB "T"	SLAB DESCRIPTION	WELDED SHEAR STUDS REQUIRED? IF YES, SEE DETAIL 2/-	SHEARTRANZ II REQUIRED? IF YES, SEE DETAIL 17/-	METAL DECKING WELDING OR FASTENING			DECKING SECTION PROPERTIES		REQD BEARING WIDTH	
						ARC SPOT (PUDDLE) WELDS U.N.O. - SEE NOTE 3		SEAMS	MOMENT OF INERTIA "I" (IN. 4/FT.)	SECTION MODULUS "S" (IN 3/FT.)	INTERIOR	END
						PERPENDICULAR TO SUPPORTS	PARALLEL TO SUPPORTS					
RD1	1 ½" VERCO PLB 36 x 18 GAUGE DECK	1 ½" (DKG. ONLY)	RIGID INSULATION OF VARYING THICKNESS PER ARCHITECTURAL	NO	NO	(7) PER 36" SHEET	SPACE @ 12" O/C	VSC2 @ 12" O/C	0.306	0.314 (+) 0.331 (-)	4"	2"

NOTES:

1. PROVIDE VERCO METAL DECKING and ACCESSORIES IN CONFORMANCE WITH REQUIREMENTS SET IN GENERAL NOTES "METAL DECKING" SECTION.
2. NO DUCTS, ELECTRICAL OR OTHERWISE, SHALL OCCUR IN FILL UNLESS NOTED OTHERWISE.
3. ARC SPOT (PUDDLE) WELDS SHALL HAVE AN EFFECTIVE FUSION AREA TO SUPPORTING MEMBER AT LEAST 1/2-INCH IN DIAMETER.

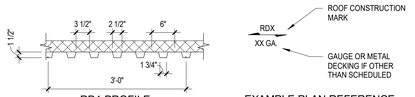

RD1 PROFILE

EXAMPLE PLAN REFERENCE

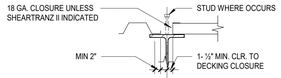

TYP. BEAM SECTION AT CHANGE IN DECKING SPAN DIRECTION (B)

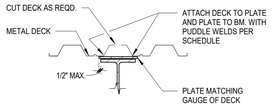

CONDITION WHER BEAM FLANGE DOESN'T ALIGN W/ LOW FLUTE (C)

TYPICAL FLOOR and ROOF CONSTRUCTION SCHEDULE and DETAILS | 01

IDENTIFICATION STAMP
DIV. OF THE STATE ARCHITECT
APP: 02-119490 INC:
REVIEWED FOR
SS ☑ FLS ☑ ACS ☑
DATE: 09/13/2022

INTERIORS
PLANNING

916-287-2400 Office

916-287-2401 Fax

LPADesignStudios.com

431 I Street,
Suite 107
Sacramento, California 95814

REGISTERED PROFESSIONAL ENGINEER
DANIEL S. WALTER
No. S4853
Exp. 12/31/22
STRUCTURAL
STATE OF CALIFORNIA

This document and all other project documents, ideas, aesthetics and designs incorporated therein are instruments of service. All project documents are copyright protected, are the property of LPA, Inc. (LPA) and cannot be lawfully used in whole or in part for any project or purpose except as set forth in the contractual agreement between LPA and its Client. The unauthorized disclosure and/or use of the project documents (including the creation of derivative works), may give rise to liability for copyright infringement, unlawful disclosure, use or misappropriation of property rights held by LPA. The unauthorized use of the project documents will give rise to the recovery of monetary losses and damages including attorney fees and costs for which the unauthorized user will be held liable.
Project documents describe the design intent of the work and are not a representation of as-built or existing conditions. LPA is not responsible for any discrepancies between the project documents and the existing conditions.

© LPA, Inc.

DAVIS SR HIGH SCHOOL AQUATICS CENTER

315 W 14TH ST., DAVIS, CA 95616

Developed for
DAVIS JOINT UNIFIED SCHOOL DISTRICT

Revision	Date

Submittal	Date
50% DD REVIEW	06/15/2021
100% DD SUBMITTAL	07/26/2021
50% CD REVIEW	10/08/2021
100% CD DSA SUBMITTAL	10/22/2021

Job Number	1904413
Date Published	06/15/2021
Checked By	Checker
Scale	As indicated

TYPICAL METAL DECKING DETAILS

S6.12

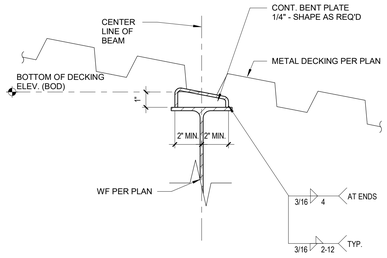

BENT PLATE OVER BEAMS AT PITCHED ROOFS | 3" = 1'-0" | 20

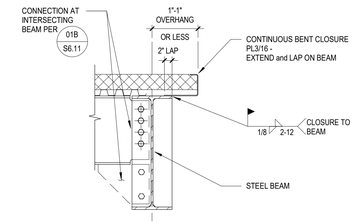

NOTE: AT INTERIOR DECK EDGES FOR DUCT SHAFT OPENINGS, 10 GAUGE BENT CLOSURE PL MAY BE SUBSTITUTED FOR 3/16 CLOSURE PL

CONDITION AT 1'-1" OVERHANG OR LESS (D)

DECKING PARALLEL OR SKEWED TO DECK EDGES

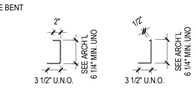

PL3/16 | 10 GAUGE

TYPICAL CLOSURE PL PROFILES

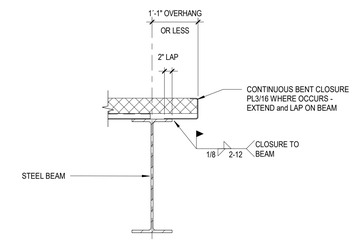

NOTE: AT INTERIOR DECK EDGES FOR DUCT SHAFT OPENINGS, 10 GAUGE BENT CLOSURE PL MAY BE SUBSTITUTED FOR 3/16 CLOSURE PL

CONDITION AT 1'-1" OVERHANG OR LESS (B)

DECKING PERPENDICULAR TO DECK EDGES

NOTES:
1. SPLICE CLOSURE PL's W/ COMPLETE PENETRATION BUTT WELDS.

TYPICAL PERIMETER and INTERIOR DECK EDGES
(BARE METAL DECKING CONDITION - NO STRUCTURAL CONCRETE FILL) | 03

IDENTIFICATION STAMP
DIV. OF THE STATE ARCHITECT
APP: 02-119490 INC:
REVIEWED FOR
SS ☑ FLS ☑ ACS ☑
DATE: 09/13/2022

INTERIORS
PLANNING

916-287-2400 Office

916-287-2401 Fax

LPADesignStudios.com

431 I Street,
Suite 107
Sacramento, California 95814

REGISTERED PROFESSIONAL ENGINEER
DANIEL S. WALTER
No. S4832
Exp. 12/31/22
STRUCTURAL
STATE OF CALIFORNIA

This document and all other project documents, ideas, aesthetics and designs incorporated therein are instruments of service. All project documents are copyright protected, are the property of LPA, Inc. (LPA) and cannot be lawfully used in whole or in part for any project or purpose except as set forth in the contractual agreement between LPA and its Client. The unauthorized disclosure and/or use of the project documents (including the creation of derivative works), may give rise to liability for copyright infringement, unlawful disclosure, use or misappropriation of property rights held by LPA. The unauthorized use of the project documents will give rise to the recovery of monetary losses and damages including attorney fees and costs for which the unauthorized user will be held liable.
Project documents describe the design intent of the work and are not a representation of as-built or existing conditions. LPA is not responsible for any discrepancies between the project documents and the existing conditions.

© LPA, Inc.

DAVIS SR HIGH SCHOOL AQUATICS CENTER

315 W 14TH ST., DAVIS, CA 95616

Developed for
DAVIS JOINT UNIFIED SCHOOL DISTRICT

Revision	Date

Submittal	Date
50% DD REVIEW	06/15/2021
100% DD SUBMITTAL	07/26/2021
50% CD REVIEW	10/08/2021
100% CD DSA SUBMITTAL	10/22/2021

Job Number	1904413
Date Published	06/15/2021
Checked By	Checker
Scale	As indicated

TYPICAL DECK SUPPORTING DETAILS

S6.13

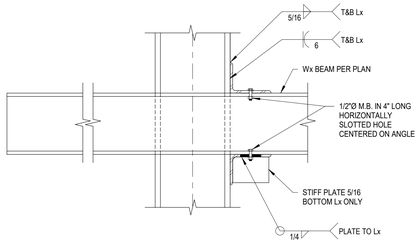

ELEVATION

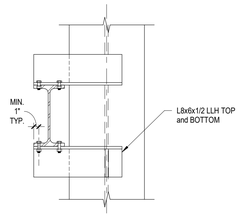

SECTION

Wx BEAM TO WIDE FLANGE COL. CONN. | 08

IDENTIFICATION STAMP
DIV. OF THE STATE ARCHITECT
APP: 02-119490 INC:
REVIEWED FOR
SS ☑ FLS ☑ ACS ☑
DATE: 09/13/2022

INTERIORS
PLANNING

916-287-2400 Office

916-287-2401 Fax

LPADesignStudios.com

431 I Street,
Suite 107
Sacramento, California 95814

REGISTERED PROFESSIONAL ENGINEER
DANIEL S. WALTER
No. S4837
Exp. 12/31/22
STRUCTURAL
STATE OF CALIFORNIA

This document and all other project documents, ideas, aesthetics and designs incorporated therein are instruments of service. All project documents are copyright protected, are the property of LPA, Inc. (LPA) and cannot be lawfully used in whole or in part for any project or purpose except as set forth in the contractual agreement between LPA and its Client. The unauthorized disclosure and/or use of the project documents (including the creation of derivative works), may give rise to liability for copyright infringement, unlawful disclosure, use or misappropriation of property rights held by LPA. The unauthorized use of the project documents will give rise to the recovery of monetary losses and damages including attorney fees and costs for which the unauthorized user will be held liable.
Project documents describe the design intent of the work and are not a representation of as-built or existing conditions. LPA is not responsible for any discrepancies between the project documents and the existing conditions.

© LPA, Inc.

DAVIS SR HIGH SCHOOL AQUATICS CENTER

315 W 14TH ST., DAVIS, CA 95616

Developed for
DAVIS JOINT UNIFIED SCHOOL DISTRICT

Revision	Date

Submittal	Date
50% DD REVIEW	06/15/2021
100% DD SUBMITTAL	07/26/2021
50% CD REVIEW	10/08/2021
100% CD DSA SUBMITTAL	10/22/2021

Job Number	1904413
Date Published	06/15/2021
Checked By	Checker
Scale	As indicated

TYPICAL
STRUCTURAL
STEEL DETAILS

S6.15

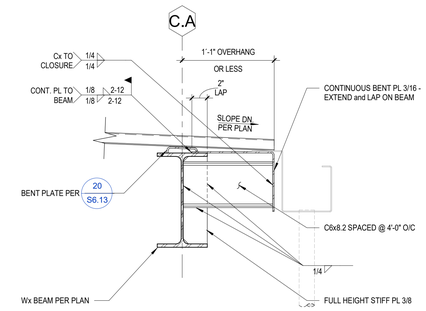

CANOPY DECK EDGE | 1 1/2" = 1'-0" | 04

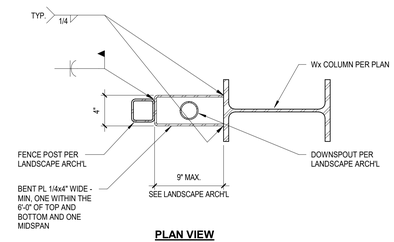

PLAN VIEW

FENCE POST CONNECTION AT COLUMN | 1 1/2" = 1'-0" | 03

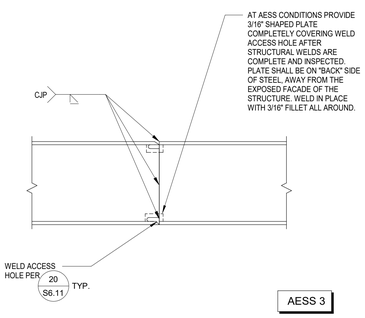

POOL CANOPY EXTERIOR BEAM SPLICE | 1" = 1'-0" | 02

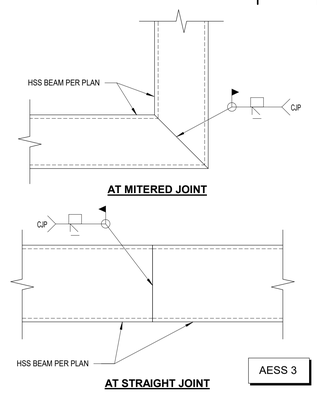

HSS CANOPY SPLICE | 1 1/2" = 1'-0" | 01

IDENTIFICATION STAMP
DIV. OF THE STATE ARCHITECT
APP: 02-119490 INC:
REVIEWED FOR
SS ☑ FLS ☑ ACS ☑
DATE: 09/13/2022

INTERIORS
ANNING

916-287-2400 Office

916-287-2401 Fax

LPADesignStudios.com

431 I Street,
Suite 107
Sacramento, California 95814

REGISTERED PROFESSIONAL ENGINEER
DANIEL S. WALTER
No. S4833
Exp. 12/31/22
STRUCTURAL
STATE OF CALIFORNIA

This document and all other project documents, ideas, aesthetics and designs incorporated therein are instruments of service. All project documents are copyright protected, are the property of LPA, Inc. (LPA) and cannot be lawfully used in whole or in part for any project or purpose except as set forth in the contractual agreement between LPA and its Client. The unauthorized disclosure and/or use of the project documents (including the creation of derivative works), may give rise to liability for copyright infringement, unlawful disclosure, use or misappropriation of property rights held by LPA. The unauthorized use of the project documents will give rise to the recovery of monetary losses and damages including attorney fees and costs for which the unauthorized user will be held liable.
Project documents describe the design intent of the work and are not a representation of as-built or existing conditions. LPA is not responsible for any discrepancies between the project documents and the existing conditions.

© LPA, Inc.

DAVIS SR HIGH SCHOOL AQUATICS CENTER

315 W 14TH ST., DAVIS, CA 95616

Developed for
DAVIS JOINT UNIFIED SCHOOL DISTRICT

Revision	Date

Submittal	Date
50% DD REVIEW	06/15/2021
100% DD SUBMITTAL	07/26/2021
50% CD REVIEW	10/08/2021
100% CD DSA SUBMITTAL	10/22/2021

Job Number	1904413
Date Published	06/15/2021
Checked By	Checker
Scale	As indicated

TYPICAL STRUCTURAL STEEL DETAILS

S6.16

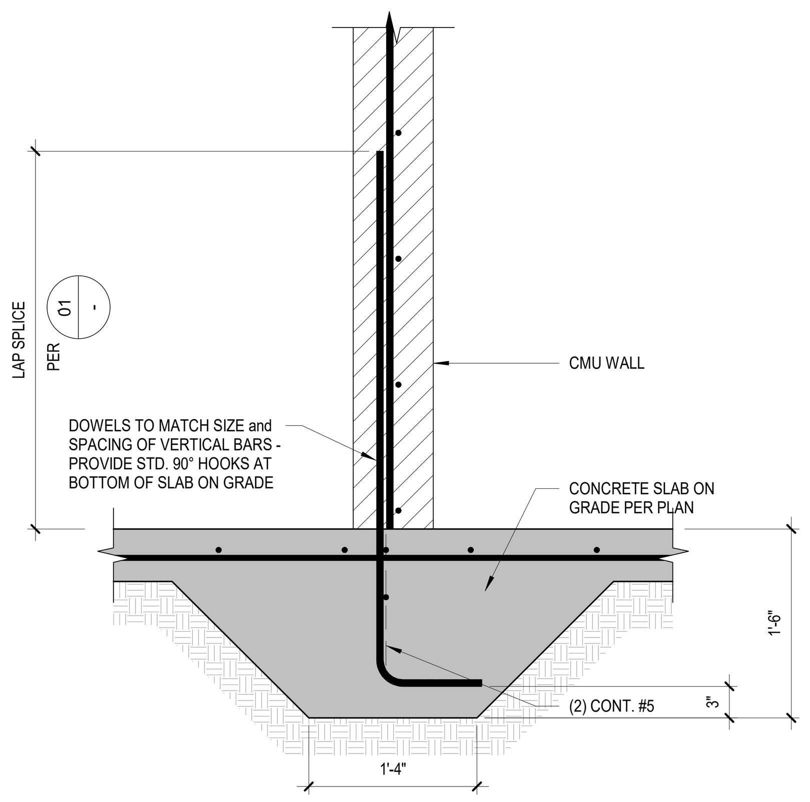

TYP. NON-BEARING MASONRY WALL BASE CONNECTION | 1" = 1'-0" | 20

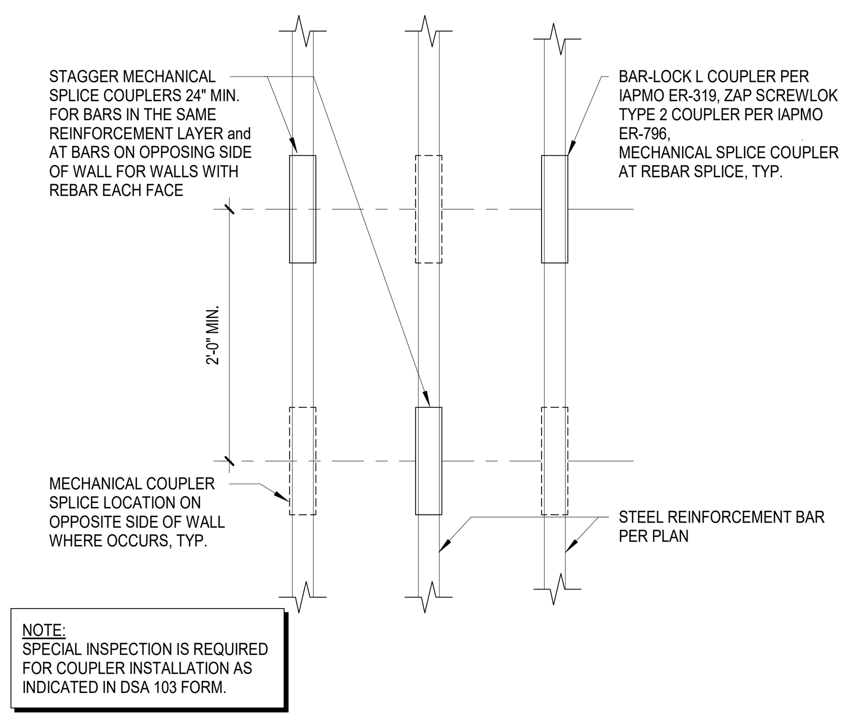

TYP. REINFORCEMENT MECHANICAL SPLICE AT CMU WALL | 1" = 1'-0" | 16

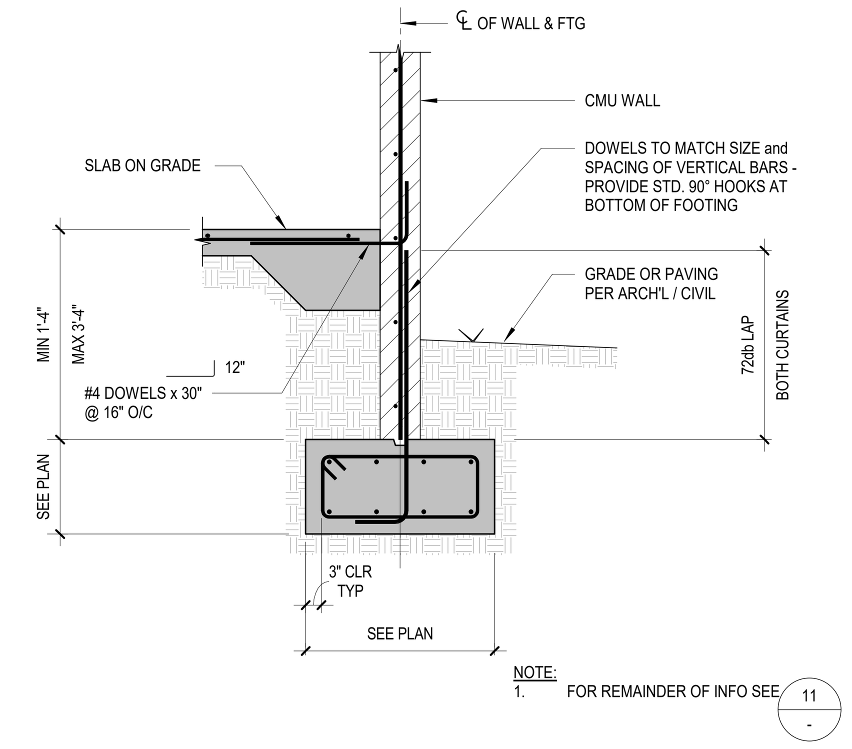

TYPICAL PERIMETER MASONRY WALL AT CONTINUOUS FOOTING | 1/2" = 1'-0" | 12

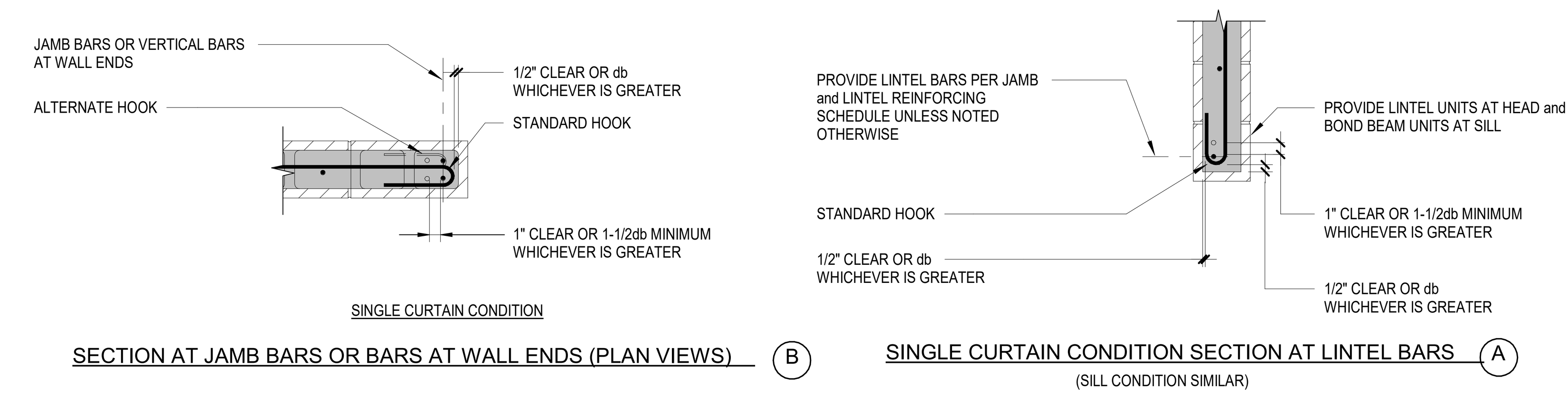

TYPICAL MASONRY CONSTRUCTION AT OPENINGS and WALL ENDS | 04

BEARING PLATE SCHEDULE	
BEAM	BEARING PLATE SIZE (THICKNESS)
W16x and SMALLER	3/4"

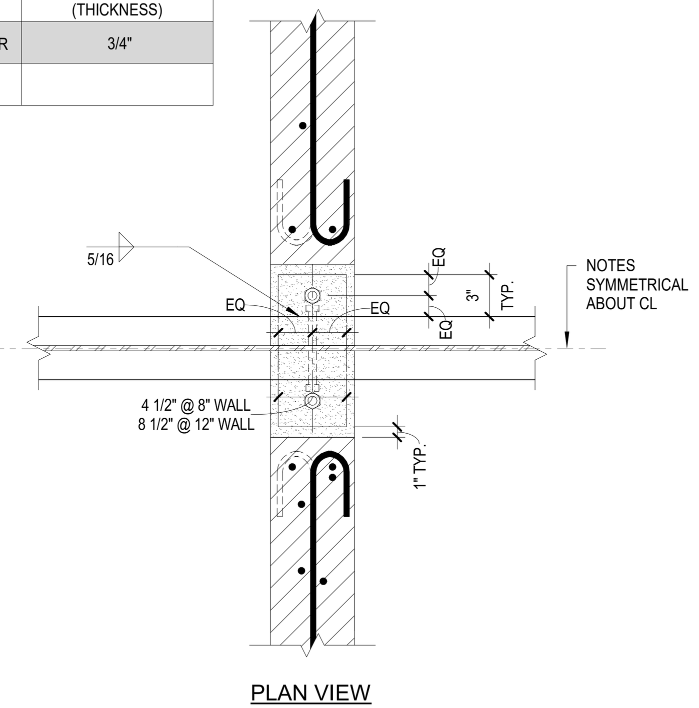

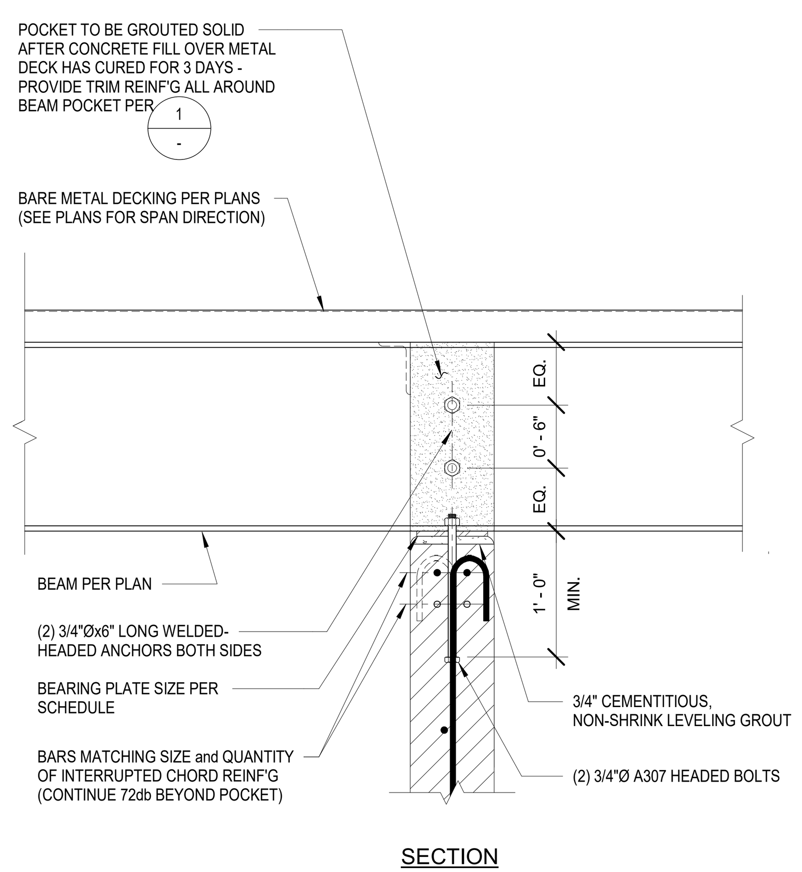

TYPICAL BEAM BEARING PLATE IN CMU WALL | 1" = 1'-0" | 18

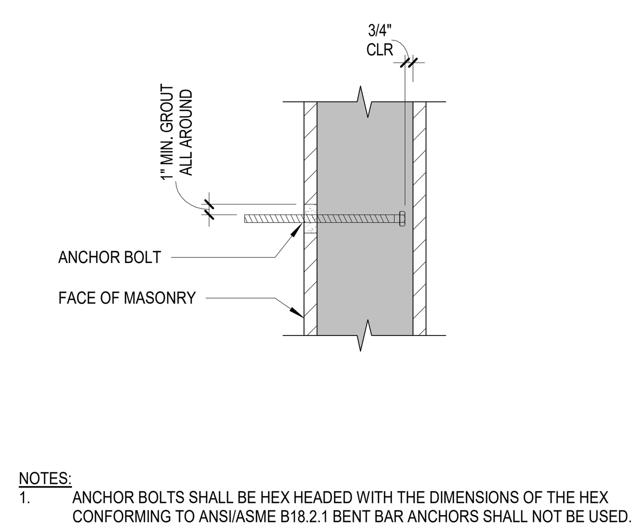

NOTES:
1. ANCHOR BOLTS SHALL BE HEX HEADED WITH THE DIMENSIONS OF THE HEX CONFORMING TO ANSI/ASME B18.2.1 BENT BAR ANCHORS SHALL NOT BE USED.

TYP. MASONRY ANCHOR BOLT DETAIL | 1" = 1'-0" | 15

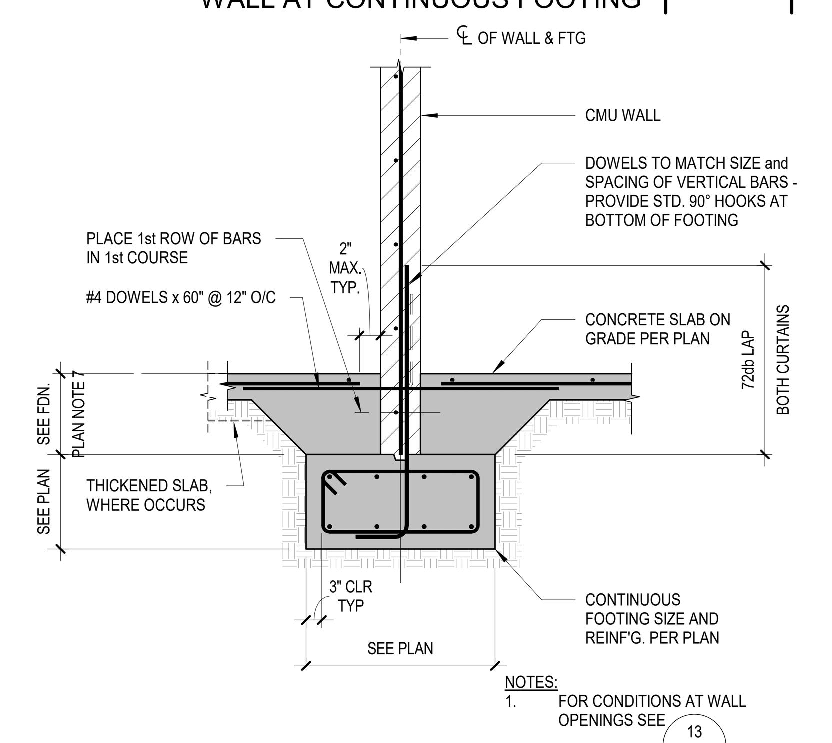

TYPICAL INTERIOR MASONRY WALL AT CONTINUOUS FOOTING | 1/2" = 1'-0" | 11

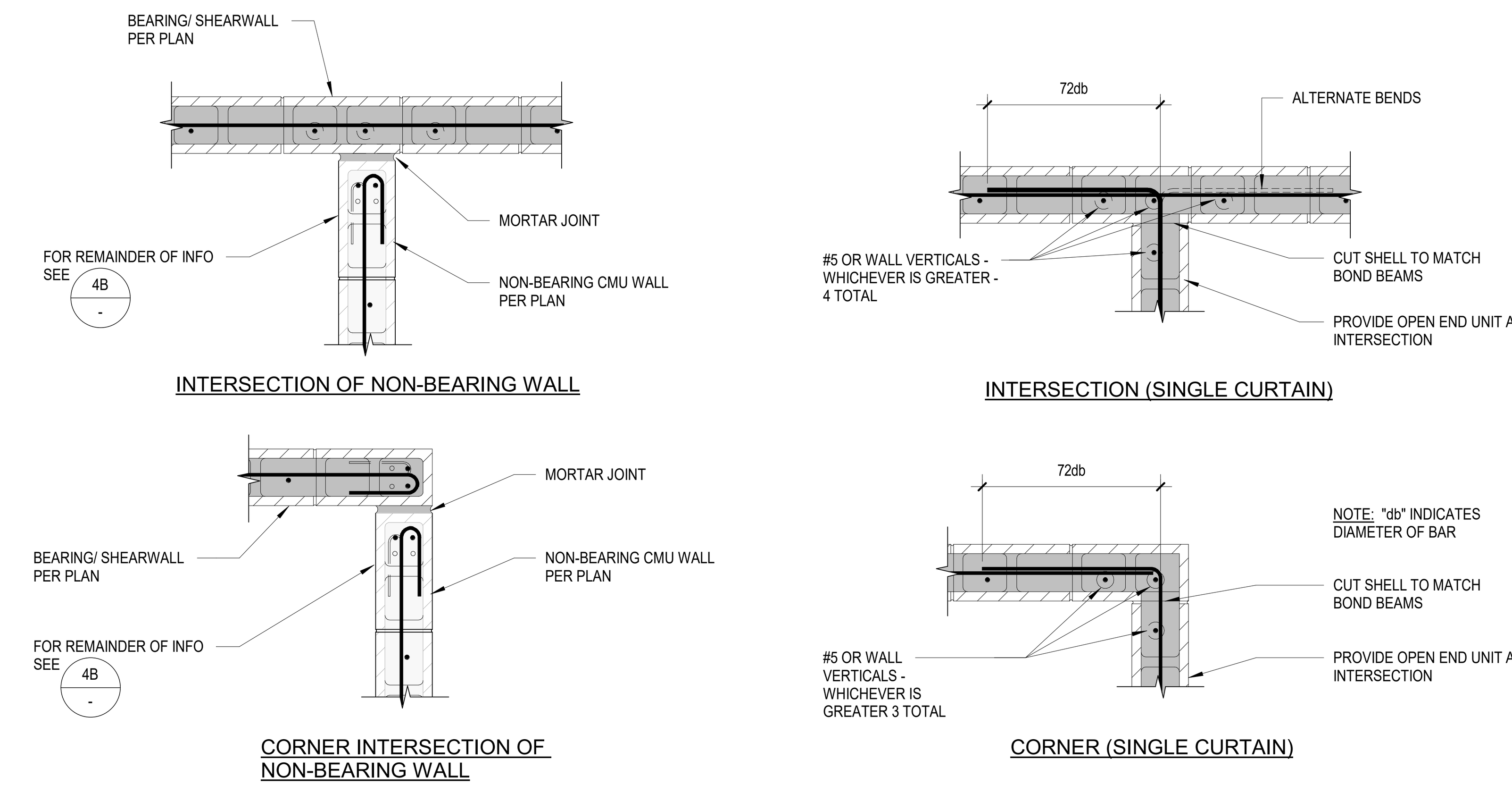

TYPICAL MASONRY CONSTRUCTION AT CORNERS and INTERSECTIONS (PLAN VIEWS) | 03

KEY NOTES:

1. PROVIDE DOWELS AT BOTTOM OF WALL MATCHING SIZE and QUANTITY OF VERTICAL OR JAMB BARS INTO FOUNDATION W/ STD. 90° HOOKS AT BOTTOM OF FOOTING - LAP W/ VERTICAL OR JAMB BARS 72 BAR DIAMETERS (db)
2. TYPICAL HORIZONTAL WALL BARS PER WALL REINFORCING SCHEDULE UNLESS OTHERWISE INDICATED ON PLANS OR ELEVATIONS - PROVIDE STD. 180° HOOKS IN 8" WALL AT WALL ENDS and OPENINGS ON VERTICAL BAR - LAP HORIZONTAL BARS 48 db AT STAGGERED LOCATIONS - NO ATTEMPT IS MADE TO LOCATE HORIZONTAL BAR SPLICE LOCATIONS
3. TYPICAL VERTICAL WALL BARS PER WALL REINFORCING SCHEDULE UNLESS OTHERWISE INDICATED ON PLANS OR ELEVATIONS - LAP VERTICAL BARS AT ELEVATED LEVELS AS SHOWN 72 db - ADD DOWELS AT CONCRETE SLAB ON GRADE and ELEVATED CONCRETE LEVELS PER DETAILS INDICATED
4. TYPICAL JAMB BARS - SEE JAMB and LINTEL REINFORCING SCHEDULE UNLESS NOTED OTHERWISE ON PLANS OR ELEVATIONS - EXTEND JAMB BARS 72 db ABOVE and BELOW OPENINGS UNLESS SHOWN OTHERWISE (ADD BARS WITH STD. 180° HOOK IN 8" WALLS AT TOP OF WALL WHERE WALLS TERMINATE ABOVE OPENING) - LAP JAMB BARS AT ELEVATED LEVELS WHERE SHOWN 72 BAR DIAMETERS - FOR TYPICAL SECTION AT JAMB BARS INCLUDING CONFINING TIES SEE 4B/- UNLESS NOTED OTHERWISE
5. TYPICAL LINTEL BARS - SEE JAMB and LINTEL REINFORCING SCHEDULE UNLESS OTHERWISE INDICATED ON PLANS OR ELEVATIONS - SPLICES NOT PERMITTED - EXTEND LINTEL BARS 72 db BEYOND OPENINGS UNLESS SHOWN OTHERWISE (PROVIDE STD. 180° HOOK IN 8" WALLS) AT WALL ENDS IF EXTENSION LENGTH BEYOND OPENING CANNOT BE ATTAINED) - FOR TYPICAL SECTION AT LINTEL BARS INCLUDING CONFINING TIES SEE 4A/- UNLESS NOTED OTHERWISE
6. WHERE OPENING JAMBS ABOVE and BELOW MISALIGN BY LESS THAN 16" ACCEPTABLE TO PROVIDE SINGLE ALIGNING JAMB FOR ALL OPENINGS AND LINTEL BARS PER (5) TO EXTEND REQUIRED DISTANCE BEYOND JAMB BARS.
7. DETERMINE LINTEL BARS BASED ON WIDTH OF LARGER OPENING ABOVE OR BELOW
8. PROVIDE (2) #5 VERTICAL BARS AT WALL ENDS UNLESS NOTED OTHERWISE - LAP VERTICAL BARS AT ELEVATED LEVELS AS SHOWN 72 BAR DIAMETERS
9. IF WALL HEIGHT IS NON-MODULAR OR TOP OF WALL SLOPES, EITHER SAW TOP COURSE OR (IF NOT EXPOSED) FORM TOP COURSE and GROUT SOLIDLY
10. EXTEND JAMB BARS DOWN TO TOP OF OPENING and PROVIDE STD. 180° HOOK IN 8" WALLS
11. AT TOP OF WALL, PROVIDE (2) HORIZONTAL WALL BARS W/ STD. 180° HOOK IN 8" WALLS AT WALL ENDS
12. SEE ARCH'L WALL ELEVATIONS FOR CONTROL JOINT LOCATIONS (MAX 25'-0" O/C U.N.O.)
13. PIER WIDTH "PW" SHALL BE AT LEAST 3 TIMES WALL THICKNESS UNLESS PIER WIDTH and SECTION SHOWN ON WALL ELEVATIONS IN STRUCTURAL DRAWINGS

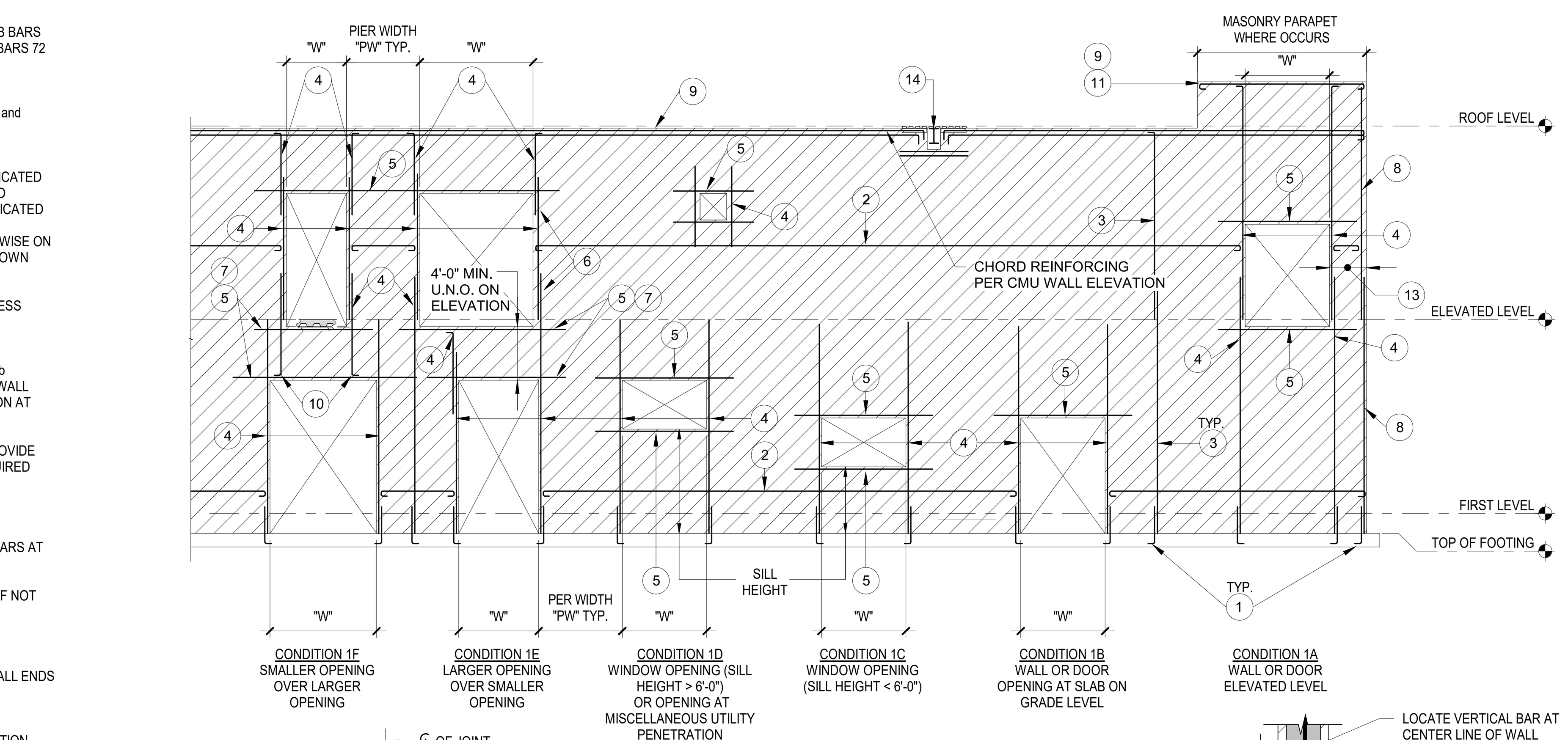

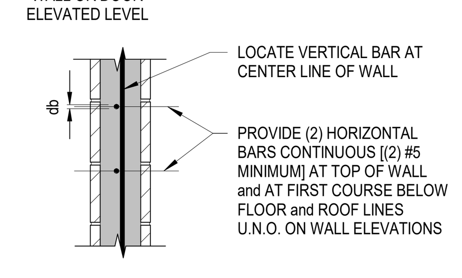

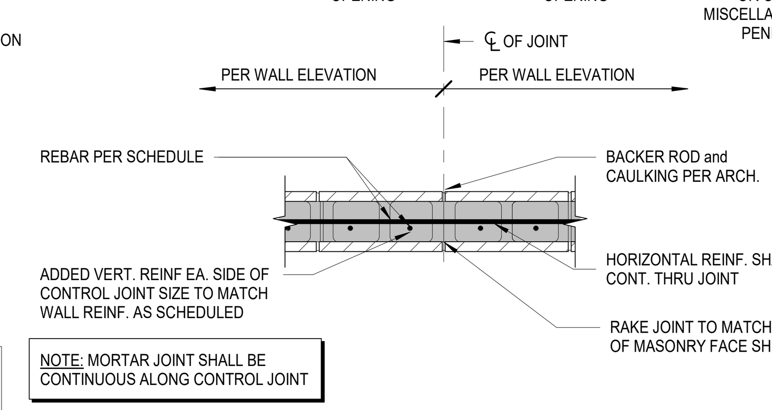

CMU CONTROL JOINT

JAMB and LINTEL REINFORCING SCHEDULE (UNLESS NOTED OTHERWISE ON PLANS OR WALL ELEVATIONS)		
MAXIMUM OPENING WIDTH "W"	REINFORCING	
	JAMB REINFORCING (VERTICAL)	LINTEL REINFORCING (HORIZONTAL)
2'-0"	(2)#5	(2)#5
4'-6"	(2)#5	(2)#5
6'-0"	(2)#6	(2)#6
8'-0"	(2)#6	(2)#6
15'-0"	SEE ELEVATION	SEE ELEVATION

NOTES:
1. AT PIERS BETWEEN ADJACENT OPENINGS WHERE PIER WIDTH "PW" < 6'-0", DETERMINE JAMB BARS BASED ON LARGER OPENING WIDTH "W".
2. OPENING (JAMB) and CORNER BARS SHALL BE OF SIZE NO LESS THAN THE VERTICAL BARS SPECIFIED ON WALL ELEVATION.

WALL REINFORCING SCHEDULE (UNLESS NOTED OTHERWISE - SEE PLANS OR WALL ELEVATIONS FOR WALL THICKNESS)			
NOMINAL WALL THICKNESS	REINFORCING		REINFORCING PLACEMENT DETAIL
	VERTICAL REINFORCING	HORIZ. REINFORCING	
8"	#5 @ 8" O/C - AT WALL CENTERLINE	#5 @ 16" O/C - ADJACENT TO VERTICAL REINFORCING	01Z / -

NOTE: LOCATE VERTICAL BARS and DOWELS FROM EXTERIOR and INSIDE FACES OF MASONRY WALL PER MASONRY SECTION OF GENERAL NOTES

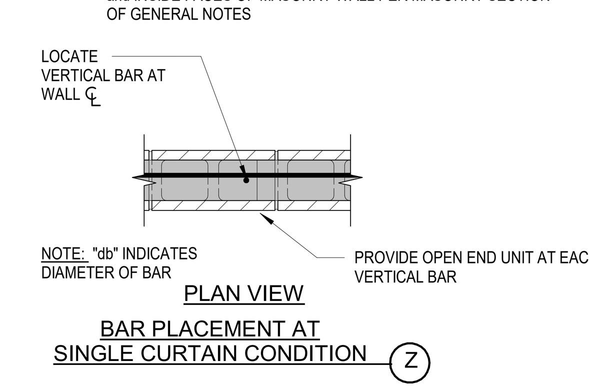

BAR PLACEMENT AT SINGLE CURTAIN CONDITION (Z)

TYPICAL MASONRY WALL ELEVATION and REINFORCING SCHEDULES (APPLICABLE TO ALL MASONRY WALLS EXCEPT SITE RETAINING WALLS UNLESS NOTED OTHERWISE) | 01

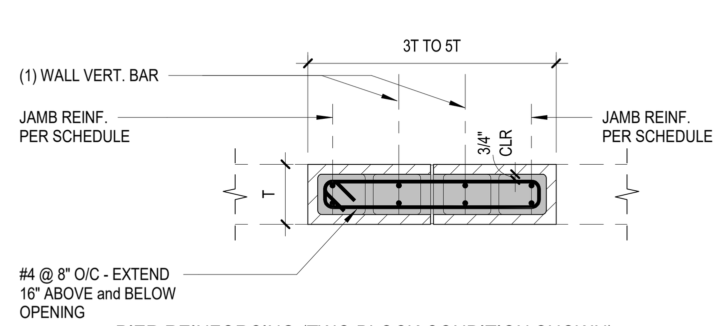

PIER REINFORCING AT 8" WALL (PLAN VIEW) | 3/4" = 1'-0" | 17

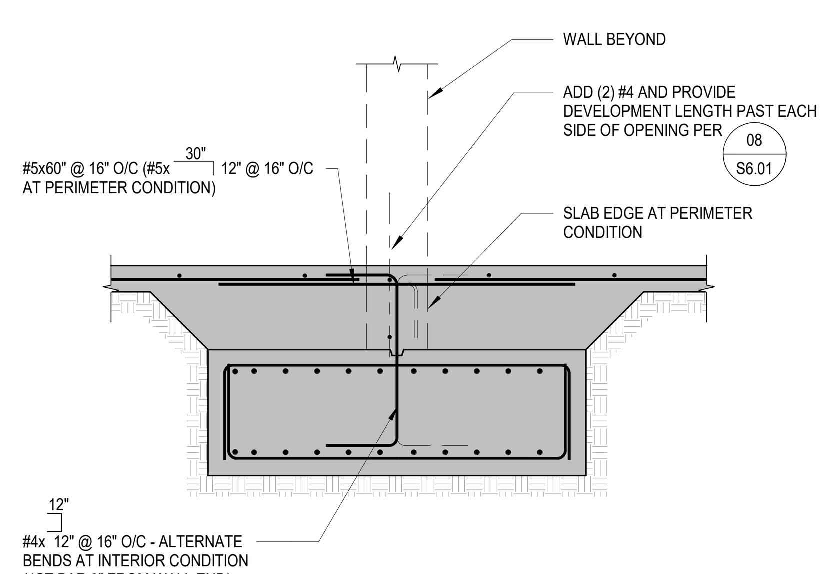

TYPICAL OPENING MASONRY WALL AT CONTINUOUS FOOTING | 1/2" = 1'-0" | 13

IDENTIFICATION STAMP
DIV. OF THE STATE ARCHITECT
APP: 02-119490 INC:
REVIEWED FOR
SS ☑ FLS ☑ ACS ☑
DATE: 09/13/2022

INTERIORS
PLANNING
916-287-2400 Office
916-287-2401 Fax
LPADesignStudios.com
431 I Street,
Suite 107
Sacramento, California 95814

REGISTERED PROFESSIONAL ENGINEER, STRUCTURAL, STATE OF CALIFORNIA, No. S4523, Exp. 12/31/22

This document and all other project documents, ideas, aesthetics and designs incorporated therein are instruments of service. All project documents are copyright protected, are the property of LPA, Inc. (LPA) and cannot be lawfully used in whole or in part for any project or purpose except as set forth in the contractual agreement between LPA and its Client. The unauthorized disclosure and/or use of the project documents (including the creation of derivative works), may give rise to liability for copyright infringement, unlawful disclosure, use or misappropriation of property rights held by LPA. The unauthorized use of the project documents will give rise to the recovery of monetary losses and damages including attorney fees and costs for which the unauthorized user will be held liable. Project documents describe the design intent of the work and are not a representation of as-built or existing conditions. LPA is not responsible for any discrepancies between the project documents and the existing conditions.
© LPA, Inc.

DAVIS SR HIGH SCHOOL AQUATICS CENTER
315 W 14TH ST., DAVIS, CA 95616
Developed for
DAVIS JOINT UNIFIED SCHOOL DISTRICT

Revision	Date

Submittal	Date
50% DD REVIEW	06/15/2021
100% DD SUBMITTAL	07/26/2021
50% CD REVIEW	10/08/2021
100% CD DSA SUBMITTAL	10/22/2021

Job Number	1904413
Date Published	06/15/2021
Checked By	JW / TD
Scale	As indicated

TYP. CMU WALL ELEVATION and DETAILS

S6.61

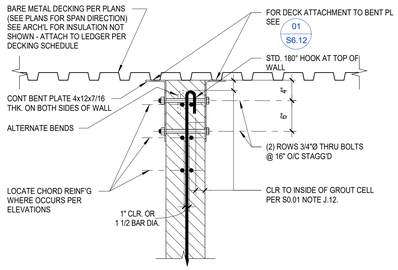

NOTES:
1. DETAILING SHOWN FOR 8" CMU WALL

TYP. INTERIOR BEARING CMU WALL AT BARE METAL DECKING | 1" = 1'-0" | 20

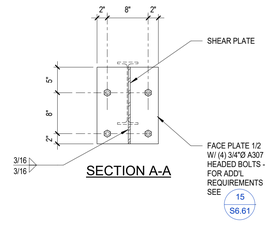

SECTION A-A

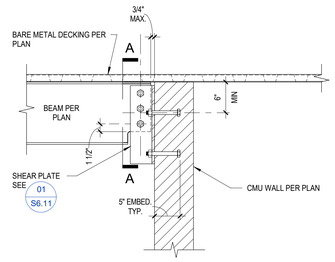

Wx OR Cx BEAM CONNECTION TO INTERIOR CMU WALL AT ROOF | 12

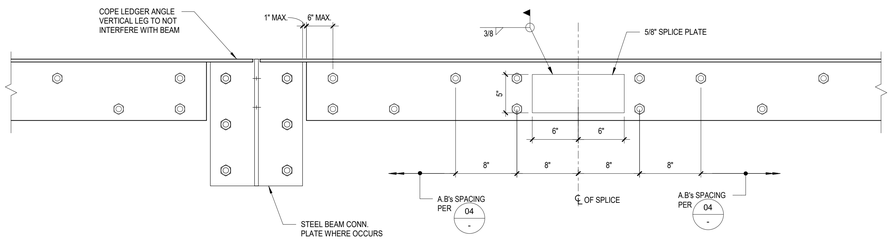

TYPICAL LEDGER SPLICE

TYPICAL LEDGER SPLICE | 15

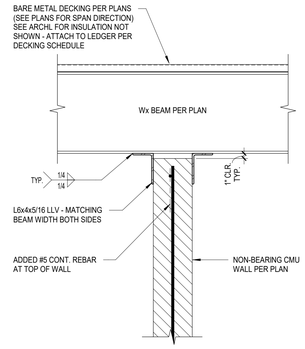

TWO SIDED CONDITION AT PERPENDICULAR STEEL BEAM

TYPICAL NON-BEARING CMU WALL TOP CONN. | 1" = 1'-0" | 10

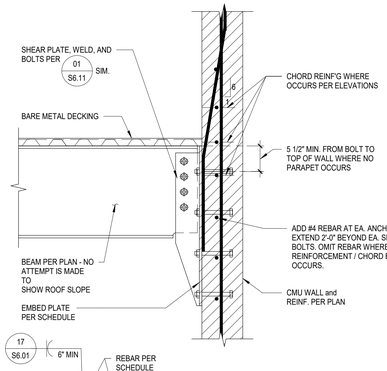

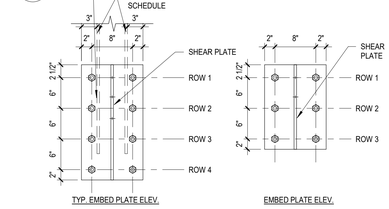

TYP. EMBED PLATE ELEV. EMBED PLATE ELEV.

EMBED PLATE SCHEDULE

BEAM SIZE	PLATE SIZE	ANCHOR BOLTS		REBAR (A706)	ULTIMATE (LRFD) BEAM END REACTION CAPACITY (kip)
	THK.	ROWS	NO. OF BOLTS PER ROW		8" and 12" WALL
W12x	1/2	3	2	-	16.8
W14x, W16x	1/2	4	2	-	23.0
W18x	1/2	4	2	(2) #6 x 54"	23.0

NOTES:
1. ANCHOR BOLTS TO BE 3/4"Ø A307 HEADED BOLTS. EMBED PER 15/S6.61
2. WHERE BEAM ATTACH BOTH SIDES OF WALL - PROVIDE THRU-BOLT AT SHARED ANCHOR ROWS.
3. OMIT REBAR WHERE PARAPET DOES NOT OCCUR.
4. OMIT REBAR WHERE OPENING ABOVE OCCURS.

TYPICAL BEAM CONNECTION to PERIMETER CMU WALL AT ROOF | 1" = 1'-0" | 07

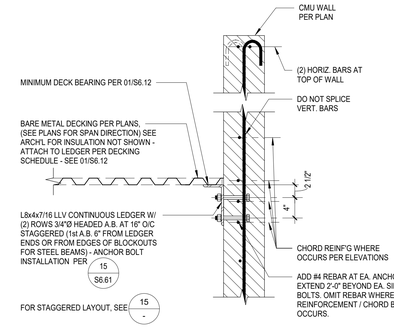

TYPICAL PERIMETER CMU WALL at BARE METAL DECKING | 1" = 1'-0" | 04

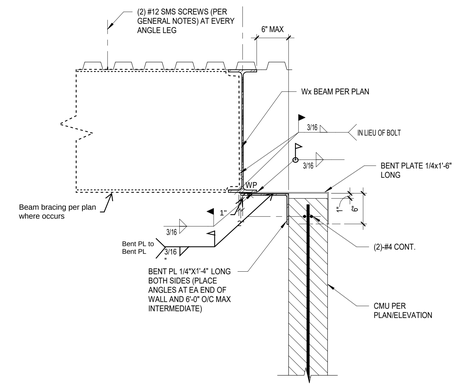

NON-BEARING CMU WALL TOP CONN. | 1" = 1'-0" | 03

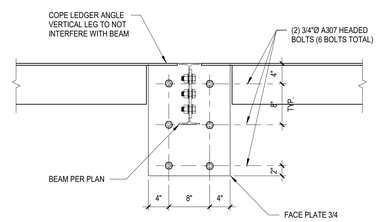

SECTION A-A

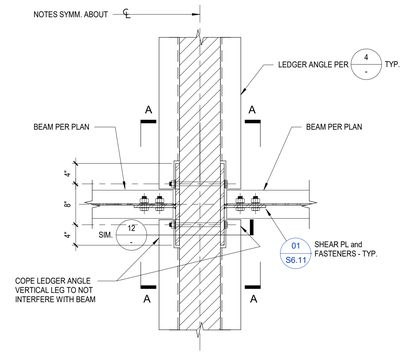

PLAN VIEW

DOUBLE BEAM CONNECTION AT CMU WALL | 02

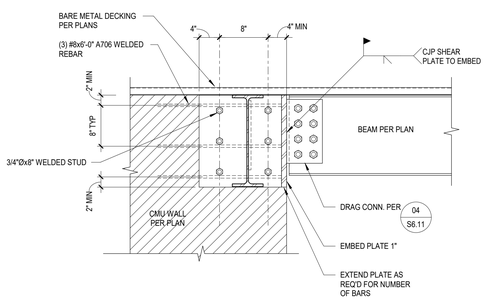

SECTION A-A

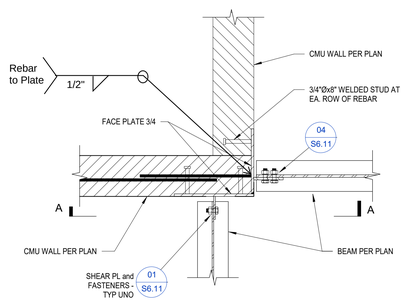

PLAN VIEW

BEAM TO BEARING CMU WALL | 09

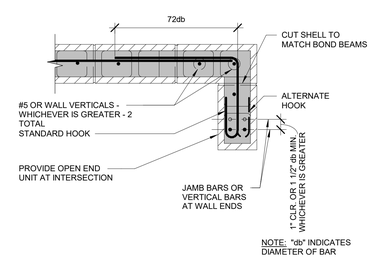

(SINGLE CURTAIN)

CMU WALL CORNER REINF. PLAN VIEW | 1" = 1'-0" | 05

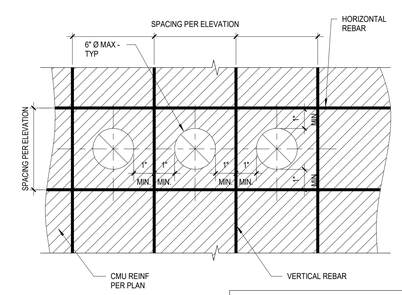

NOTE:
1. PENETRATIONS ALLOWED ONLY WHERE INDICATED ON STRUCTURAL WALL ELEVATIONS, U.N.O.
2. MAX (3) ADJACENT PENTRATIONS AS SHOWN

HORIZONTAL PENETRATIONS IN CMU WALL | 1" = 1'-0" | 01

IDENTIFICATION STAMP
DIV. OF THE STATE ARCHITECT
APP: 02-119490 INC:
REVIEWED FOR
SS ☑ FLS ☑ ACS ☑
DATE: 09/13/2022

INTERIORS
PLANNING

916-287-2400 Office
916-287-2401 Fax
LPADesignStudios.com
431 I Street,
Suite 107
Sacramento, California 95814

REGISTERED PROFESSIONAL ENGINEER DANIEL S. WANG No. S4837 Exp. 12/31/22 STRUCTURAL STATE OF CALIFORNIA

This document and all other project documents, ideas, aesthetics and designs incorporated therein are instruments of service. All project documents are copyright protected, are the property of LPA, Inc. (LPA) and cannot be lawfully used in whole or in part for any project or purpose except as set forth in the contractual agreement between LPA and its Client. The unauthorized disclosure and/or use of the project documents (including the creation of derivative works), may give rise to liability for copyright infringement, unlawful disclosure, use or misappropriation of property rights held by LPA. The unauthorized use of the project documents will give rise to the recovery of monetary losses and damages including attorney fees and costs for which the unauthorized user will be held liable.
Project documents describe the design intent of the work and are not a representation of as-built or existing conditions. LPA is not responsible for any discrepancies between the project documents and the existing conditions.

© LPA, Inc.

DAVIS SR HIGH SCHOOL AQUATICS CENTER

315 W 14TH ST., DAVIS, CA 95616

Developed for
DAVIS JOINT UNIFIED SCHOOL DISTRICT

Revision	Date

Submittal	Date
50% DD REVIEW	06/15/2021
100% DD SUBMITTAL	07/26/2021
50% CD REVIEW	10/08/2021
100% CD DSA SUBMITTAL	10/22/2021

Job Number	1904413
Date Published	06/15/2021
Checked By	JW / TD
Scale	As indicated

TYPICAL CMU WALL DETAILS

S6.62

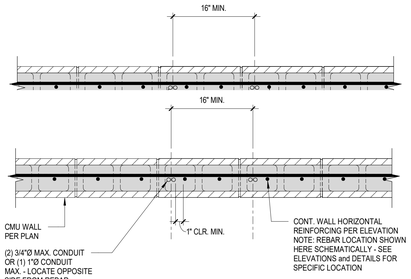

4. NO ALUMINUM COMPONENTS SHALL BE EMBEDED IN MASONRY CONSTRUCTION.
5. WHERE CONDUIT OCCUR IN CELL CONTAINING VERTICAL REINFORCEMENT PROVIDE MINIMUM 1" CLR. BETWEEN BAR and CONDUIT - CENTER CONDUIT IN CELL

VERTICAL CONDUITS IN CMU WALL | 03

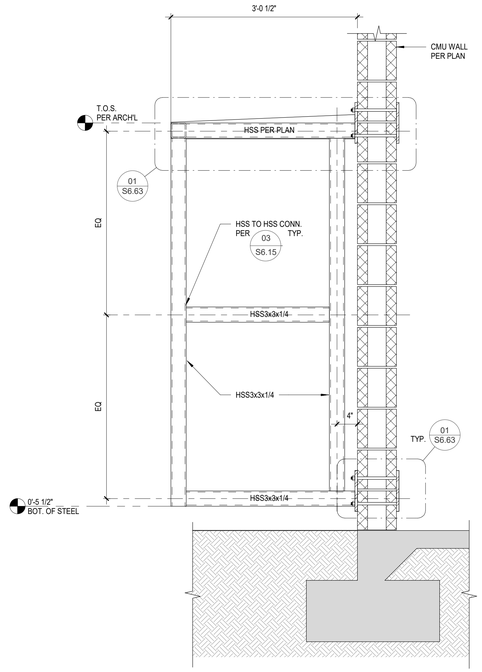

TYP. EYEBROW CANOPY WING WALL ELEVATION | 02

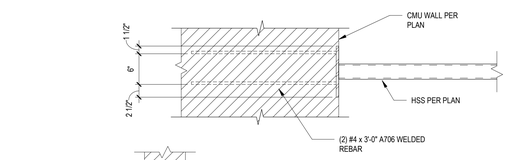

SECTION B-B

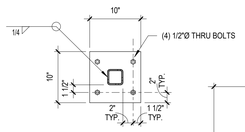

SECTION A-A

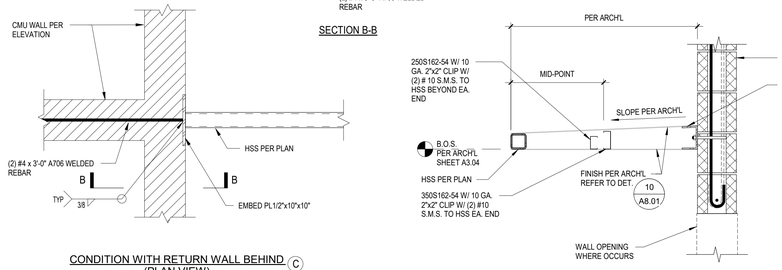

CONDITION WITH RETURN WALL BEHIND (PLAN VIEW) (C)

CONDITION BETWEEN CANOPY BEAMS (B)

CANOPY HSS BEAM TO CMU WALL CONN. (A)

TYP. EYEBROW CANOPY CONN. AT CMU WALL | 01

IDENTIFICATION STAMP
DIV. OF THE STATE ARCHITECT
APP: 02-119490 INC:
REVIEWED FOR
SS ☑ FLS ☑ ACS ☑
DATE: 09/13/2022

INTERIORS
PLANNING

916-287-2400 Office

916-287-2401 Fax

LPADesignStudios.com

431 I Street,
Suite 107
Sacramento, California 95814

REGISTERED PROFESSIONAL ENGINEER
DANIEL S. WALTER
No. S-8153
Exp. 12/31/22
STRUCTURAL
STATE OF CALIFORNIA

This document and all other project documents, ideas, aesthetics and designs incorporated therein are instruments of service. All project documents are copyright protected, are the property of LPA, Inc. (LPA) and cannot be lawfully used in whole or in part for any project or purpose except as set forth in the contractual agreement between LPA and its Client. The unauthorized disclosure and/or use of the project documents (including the creation of derivative works), may give rise to liability for copyright infringement, unlawful disclosure, use or misappropriation of property rights held by LPA. The unauthorized use of the project documents will give rise to the recovery of monetary losses and damages including attorney fees and costs for which the unauthorized user will be held liable.
Project documents describe the design intent of the work and are not a representation of as-built or existing conditions. LPA is not responsible for any discrepancies between the project documents and the existing conditions.

© LPA, Inc.

DAVIS SR HIGH SCHOOL AQUATICS CENTER

315 W 14TH ST., DAVIS, CA 95616

Developed for
DAVIS JOINT UNIFIED SCHOOL DISTRICT

Revision	Date

Submittal	Date
50% DD REVIEW	06/15/2021
100% DD SUBMITTAL	07/26/2021
50% CD REVIEW	10/08/2021
100% CD DSA SUBMITTAL	10/22/2021

Job Number	1904413
Date Published	06/15/2021
Checked By	Checker
Scale	1" = 1'-0"

TYPICAL CMU WALL DETAILS

S6.63

LIGHT GAUGE METAL FRAMING GENERAL NOTES

1. Applicable Standards: CBC Section 2210A and "Specifications for the Design of Cold-Formed Steel Structural Members" of AISI, 2016 Edition including amendments and referenced standards. Minimum yield strength shall be as follows:
   a. 43 mils (18 gauge) and lighter (33 ksi):
      1. Carbon Sheet Steel to be Painted: ASTM A1003, Grade 33.
      2. Galvanized: ASTM A653, Grade A.
   b. 54 mils (16 gauge) and heavier (50 ksi):
      1. Carbon Sheet Steel to be Painted: ASTM A1003, Grade 50.
      2. Galvanized: ASTM A653, Grade D.
2. Manufacturer and Properties: Member of Steel Framing Industry Association (SFIA) complying with ICC-ESR 4205. Provide punched studs as scheduled in these drawings with minimum effective section properties as indicated in referenced evaluation report.
3. Minimum Gauge Thicknesses: Indicated properties are based on the following thicknesses:

   12 ga. - 0.1017 inch, 97 mils 14 ga. - 0.0713 inch, 68 mils 16 ga. - 0.0566 inch, 54 mils
   18 ga. - 0.0451 inch, 43 mils 20 ga. - .0329 inch, 33 mils
4. Track Material: Provide unpunched track of dimensions to ensure proper fit of studs with minimum effective section properties as indicated in referenced evaluation report.
5. Lateral Bridging for Studs: Required when rigid wall finish does not continue full height on either or both sides of studs. Install horizontal straps or cold-rolled channels as shown and in accordance with Section D3 of AISI specification. See typical details.
6. Lateral Blocking for Joists: Joists shall be braced by full depth blocking at all points of support. Joist blocking shall also be provided at the following locations: See typical details.
7. Joist Web Punch-Out Locations: Web punch-outs shall not be located closer than twice the member depth from edge of bearing support or concentrated loads, 12" minimum. Do not provide punchouts at tracks.
8. Securing Studs and Braces: Plumb, align and tightly nest in both upper and lower tracks with secure attachment to both flanges of tracks. Splices in axial loaded studs and braces are not permitted.
9. Self-Drilling Screws: See General Notes.
10. Welding: ANSI/AWS D1.3 and CBC Section 2210A. Wire tying of framing components is not permitted.
    a. Welder Certification: Governing Code Authority.
    b. Electrodes: E60XX at 33 ksi members, E70XX at 50 ksi members.
    c. Touch-Up: Zinc-rich paint at galvanized members and regular paint at carbon sheet steel.

LIGHT GAUGE METAL FRAMING GENERAL NOTES | A

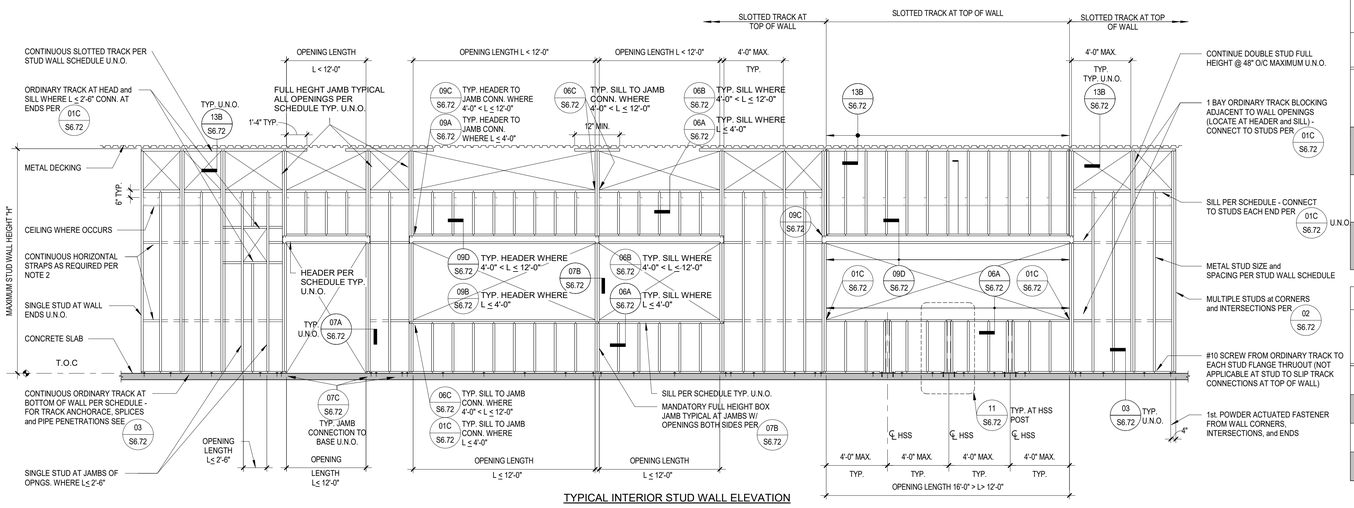

TYPICAL INTERIOR STUD WALL ELEVATION

INTERIOR HEADER SCHEDULE (SEE 09/S6.72)

MAX. OPNG. LENGTH "L"	HEADER MATERIAL
4'-0"	FLAT MEMBER MATCHING STUD MATERIAL W/ ORDINARY TRACK ABOVE PER STUD WALL SCHEDULE
8'-0"	(2) 600S162-43 W/ ORDINARY TRACK TOP and BOTTOM PER STUD SCHEDULE
12'-0"	(2) 800S162-43 W/ ORDINARY TRACK TOP and BOTTOM PER STUD SCHEDULE
16'-0"	(3) 800S162-54 W/ 16 GA.x6" ORDINARY TRACK TOP and BOTTOM PER STUD SCHEDULE

INTERIOR SILL SCHEDULE (SEE 06/S6.72)

MAX. OPNG. LENGTH "L"	SILL MATERIAL
4'-0"	ORDINARY TRACK PER STUD WALL SCHEDULE
8'-0"	FLAT MEMBER MATCHING STUD MATERIAL W/ ORDINARY TRACK BELOW PER STUD WALL SCHEDULE
12'-0"	(2) FLAT MEMBERS MATCHING STUD MATERIAL W/ ORDINARY TRACK BELOW PER STUD WALL SCHEDULE
16'-0"	16 GA.x6" ORDINARY TRACK PER STUD WALL SCHEDULE

INTERIOR JAMB SCHEDULE (SEE 07/S6.72)

MAX. OPNG. LENGTH "L"	JAMB MATERIAL	SECTION
4'-0"	DOUBLE STUDS MATCHING STUD MATERIAL	07A S6.72
8'-0"	DOUBLE STUDS MATCHING STUD MATERIAL	07A S6.72
12'-0"	DOUBLE STUDS MATCHING STUD MATERIAL -54 MIL (16 GA.) MIN. THK	07A S6.72
16'-0"	DOUBLE 6" STUDS MATCHING STUD MATERIAL -54 MIL (16 GA.) MIN. THK	07A S6.72

INTERIOR STUD WALL SCHEDULE

MAXIMUM STUD HEIGHT "H"	METAL STUD (SSMA TRACK DESIGNATION) and SPACING	ORDINARY TRACK (SSMA DESIGNATION)	VERT. SLOTTED TRACK (PER 13B/S6.72) GAUGE	REMARKS
29'-0"	800S162-54 @16" O/C	800T150-54	14	

STUD WALL NOTES:

1. SEE LIGHT GAUGE METAL FRAMING GENERAL NOTES PER THIS SHEET.
2. PROVIDE HORIZONTAL STRAPS and BLOCKING AT ALL STUD WALLS EXCEPT WHERE WALL FINISH OCCURS ON BOTH SIDES OF WALL. SEE DETAIL 01/S6.72.
3. NOT USED
4. STUDS THAT ARE SUPPORTING LIGHT (BETWEEN 50lbs and 250lbs) EQUIPMENT or CASEWORK SHALL BE DOUBLE STUDS (16GA. MIN.)
5. WHERE PIPE, CONDUIT, ETC. RUN VERTICALLY WITHIN INTERIOR WALLS, POSITION PIPE and ADJACENT STUDS PER 13/S6.73

TYPICAL INTERIOR STUD WALL SCHEDULES and ELEVATION | 1/4" = 1'-0" | 01

IDENTIFICATION STAMP
DIV. OF THE STATE ARCHITECT
APP: 02-119490 INC:
REVIEWED FOR
SS ☑ FLS ☑ ACS ☑
DATE: 09/13/2022

INTERIORS
PLANNING

916-287-2400 Office
916-287-2401 Fax
LPADesignStudios.com
431 I Street,
Suite 107
Sacramento, California 95814

REGISTERED PROFESSIONAL ENGINEER
DANIEL S. WALTER
No. S4532
Exp. 12/31/22
STRUCTURAL
STATE OF CALIFORNIA

This document and all other project documents, ideas, aesthetics and designs incorporated therein are instruments of service. All project documents are copyright protected, are the property of LPA, Inc. (LPA) and cannot be lawfully used in whole or in part for any project or purpose except as set forth in the contractual agreement between LPA and its Client. The unauthorized disclosure and/or use of the project documents (including the creation of derivative works), may give rise to liability for copyright infringement, unlawful disclosure, use or misappropriation of property rights held by LPA. The unauthorized use of the project documents will give rise to the recovery of monetary losses and damages including attorney fees and costs for which the unauthorized user will be held liable.
Project documents describe the design intent of the work and are not a representation of as-built or existing conditions. LPA is not responsible for any discrepancies between the project documents and the existing conditions.

© LPA, Inc.

DAVIS SR HIGH SCHOOL AQUATICS CENTER
315 W 14TH ST., DAVIS, CA 95616
Developed for
DAVIS JOINT UNIFIED SCHOOL DISTRICT

Revision	Date

Submittal	Date
50% DD REVIEW	06/15/2021
100% DD SUBMITTAL	07/26/2021
50% CD REVIEW	10/08/2021
100% CD DSA SUBMITTAL	10/22/2021

Job Number	1904413
Date Published	06/15/2021
Checked By	Checker
Scale	1/4" = 1'-0"

TYPICAL LIGHT GAUGE FRAMING SCHEDULES and ELEVATIONS

S6.71

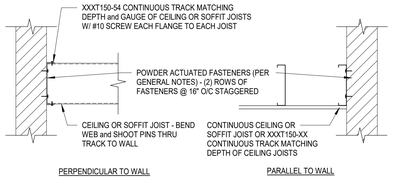

CEILING OR SOFFIT JOIST TO CONCRETE OR CONCRETE BLOCK WALL (C)

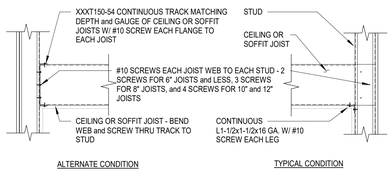

CEILING OR SOFFIT JOIST PERPENDICULAR TO STUD WALL (A)

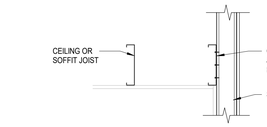

CEILING OR SOFFIT JOIST PARALLEL TO STUD WALL (B)

NOTES:
1. PROVIDE CEILING OR SOFFIT JOIST LATERAL BLOCKING PER DETAIL (17/-)

TYPICAL CEILING OR SOFFIT JOIST TO WALL CONNECTION DETAILS | 16

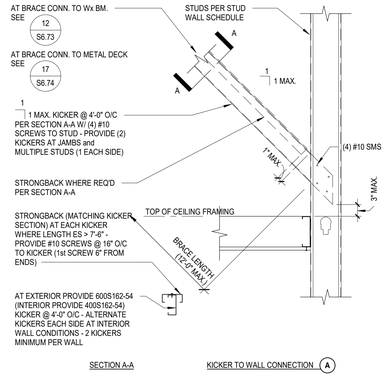

TYPICAL KICKER DETAIL | 1" = 1'-0" | 12

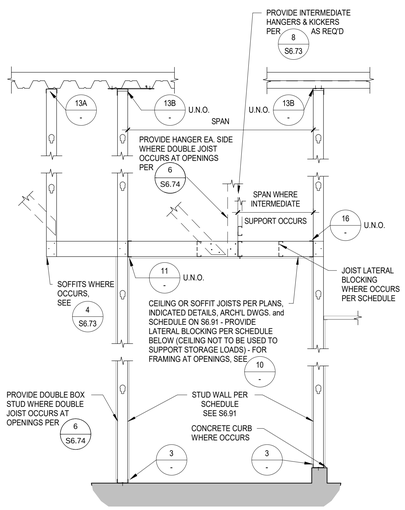

CEILING OR SOFFIT JOIST SCHED.			
INTERIOR / EXTERIOR	MAX. SPAN (SEE NOTE 1)	CEILING OR SOFFIT JOIST	JOIST LATERAL BLOCKING PER 17/-
INTERIOR	10'-0"	400S162-43 @ 16" O/C	(1) ROW AT MID-SPAN
INTERIOR	13'-6"	600S162-54 @ 16" O/C	(2) ROWS AT 1/3 POINTS
EXTERIOR	10'-0"	600S162-54 @ 16" O/C	(1) ROW AT MID-SPAN

NOTE:
1. WHERE DOUBLE JOIST OCCURS AT OPENINGS, MAXIMUM SPAN OF DOUBLE JOIST TO BE 10'-0" MAX.

TYPICAL CEILING OR SOFFIT FRAMING SECTION | 1/2" = 1'-0" | 18

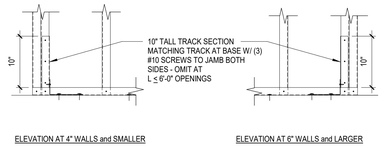

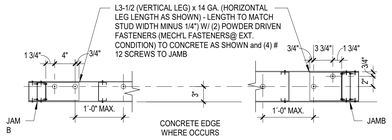

PLAN VIEW AT 4" WALLS and SMALLER

PLAN VIEW AT 6" WALLS and LARGER

JAMB CONNECTION AT BASE (C)

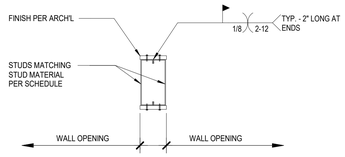

BOX JAMB SECTION (B)

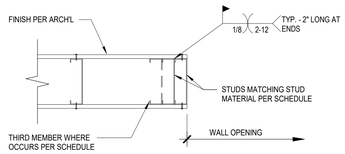

FRONT-TO-BACK JAMB SECTION (A)

TYPICAL STUD WALL JAMB CONSTRUCTION AT OPENINGS | 1 1/2" = 1'-0" | 07

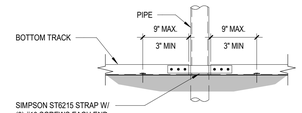

BOTTOM TRACK PENETRATION DETAIL (D)

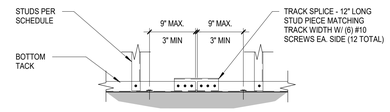

BOTTOM TRACK SPLICE DETAIL (C)

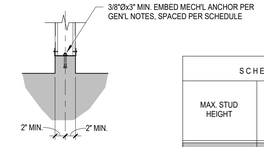

SCHEDULE	
MAX. STUD HEIGHT	POWDER ACTUATED FASTENER OR MECHANICAL ANCHOR SPACING AS DETAILED
17'-6"	24"
29'-0"	16"

BASE AT CURB DETAIL (B)
(ALL EXTERIOR WALLS and INTERIOR WALLS W/ CURBS ONLY)

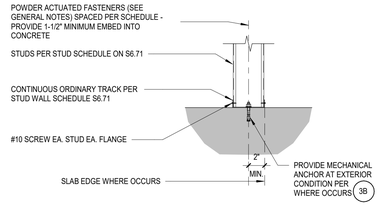

NOTE: AT CURBS and EXTERIOR STUDS SEE CONDITION 3B ABOVE

TYP. BASE DETAIL (A)

TYP. STUD WALL BASE CONSTRUCTION TO CONCRETE | 1" = 1'-0" | 03

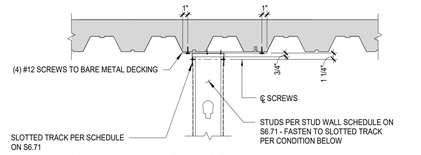

CONDITION WHERE WALL IS PARALLEL TO METAL DECKING SPAN

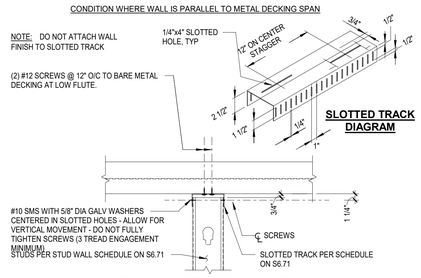

CONDITION AT ELEVATED CONCRETE DECKS OR CONDITION WHERE WALL IS SKEWED OR PERPENDICULAR TO METAL DECKING SPAN

SLIP CONNECTION TO FLOOR/ROOF DECK (B)

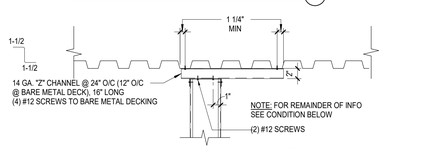

CONDITION WHERE WALL IS PARALLEL TO METAL DECKING SPAN

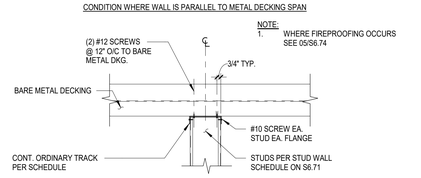

CONDITION AT ELEVATED CONCRETE DECKS OR WHERE WALL IS SKEWED OR PERPENDICULAR TO METAL DECKING SPAN

RIGID CONNECTION TO FLOOR/ROOF DECK (A)

TYP. RIGID and SLIP CONN. AT TOP OF STUD WALL TO FLOOR/ROOF DECK | 1" = 1'-0" | 13

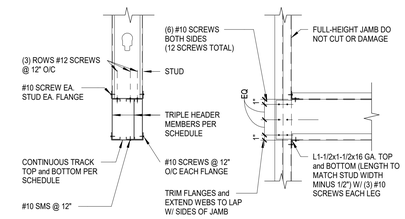

CONDITION AT TRIPLE HEADER

CONDITION AT TRIPLE HEADER

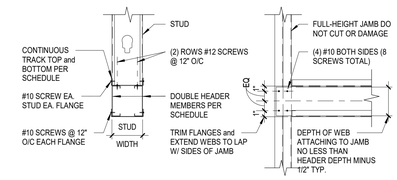

CONDITION AT DOUBLE HEADER

CONDITION AT DOUBLE HEADER

HEADER SECTION (D)

HEADER TO JAMB CONNECTION (C)

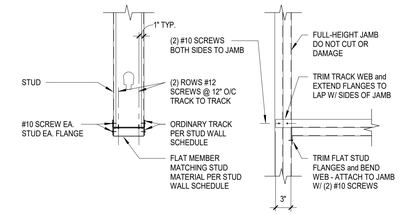

HEADER SECTION (B)

HEADER TO JAMB CONNECCTION (A)

TYPICAL STUD WALL HEADER CONSTRUCTION AT OPENINGS | 1" = 1'-0" | 09

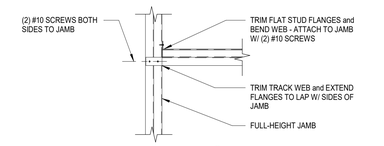

SILL CONNECTION (C)

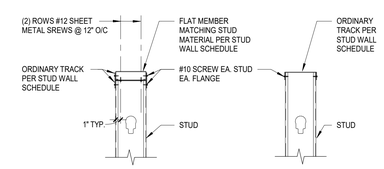

SILL SECTION (B)

SILL SECTION (A)

TYPICAL STUD WALL SILL CONSTRUCTION AT OPENINGS | 1" = 1'-0" | 06

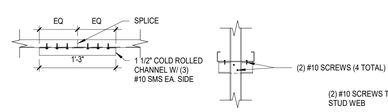

SECTION COLD ROLLED CHANNEL SPLICE

SECTION A-A

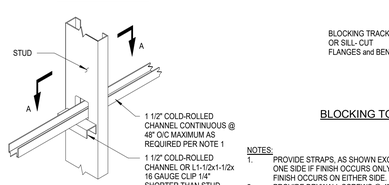

BRIDGING OPTION (B)

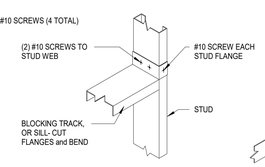

BLOCKING TO STUD CONNECTION (C)

NOTES:
1. PROVIDE STRAPS, AS SHOWN EXCEPT WHERE WALL FINISH OCCURS ON BOTH SIDES. PLACE STRAPS ON ONE SIDE IF FINISH OCCURS ONLY ON OTHER SIDE. PLACE STRAPS ON BOTH SIDES OF STUDS WHERE NO FINISH OCCURS ON EITHER SIDE.
2. PROVIDE DRYWALL SCREWS @ 4" O/C TO TRACK BLOCKING WHEREVER BLOCKING OCCURS BEHIND DRYWALL FINISH.
3. DO NOT CUT OR DAMAGE VERTICAL STUDS DURING INSTALLATION OF CONNECTION ELEMENTS SUCH AS HEADERS, SILLS, BLOCKING, OR BRIDGING.
4. WHERE VERTICAL PIPE PENETRATION PIPE OCCURS, PROVIDE STRAP OPTION PER 1A and RELOCATE BLOCKING AS REQ'D.

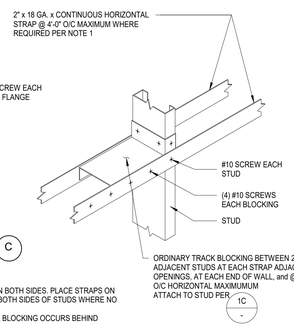

STRAP OPTION (A)

TYPICAL METAL STUD STRAPPING OR BRIDGING DETAIL | 01

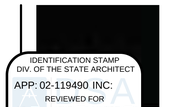

IDENTIFICATION STAMP
DIV. OF THE STATE ARCHITECT
APP: 02-119490 INC:
REVIEWED FOR
SS ☑ FLS ☑ ACS ☑
DATE: 09/13/2022

INTERIORS
PLANNING

916-287-2400 Office

916-287-2401 Fax

LPADesignStudios.com

431 I Street,
Suite 107
Sacramento, California 95814

This document and all other project documents, ideas, aesthetics and designs incorporated therein are instruments of service. All project documents are copyright protected, are the property of LPA, Inc. (LPA) and cannot be lawfully used in whole or in part for any project or purpose except as set forth in the contractual agreement between LPA and its Client. The unauthorized disclosure and/or use of the project documents (including the creation of derivative works), may give rise to liability for copyright infringement, unlawful disclosure, use or misappropriation of property rights held by LPA. The unauthorized use of the project documents will give rise to the recovery of monetary losses and damages including attorney fees and costs for which the unauthorized user will be held liable.
Project documents describe the design intent of the work and are not a representation of as-built or existing conditions. LPA is not responsible for any discrepancies between the project documents and the existing conditions.

© LPA, Inc.

DAVIS SR HIGH SCHOOL AQUATICS CENTER

315 W 14TH ST., DAVIS, CA 95616

Developed for
DAVIS JOINT UNIFIED SCHOOL DISTRICT

Revision	Date

Submittal	Date
50% DD REVIEW	06/15/2021
100% DD SUBMITTAL	07/26/2021
50% CD REVIEW	10/08/2021
100% CD DSA SUBMITTAL	10/22/2021

Job Number	1904413
Date Published	06/15/2021
Checked By	JW/BN
Scale	As indicated

TYPICAL LIGHT GAUGE METAL FRAMING DETAILS

S6.72

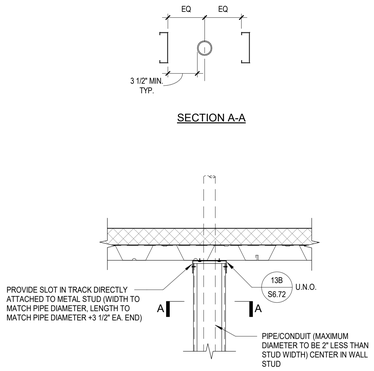

VERTICAL PIPE PENETRATION AT INTERIOR WALL | 1" = 1'-0" | 13

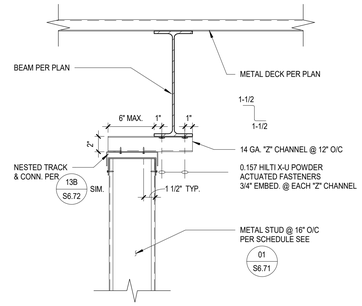

TYPICAL METAL STUD SLIP CONN. TO STEEL BEAM | 1 1/2" = 1'-0" | 11

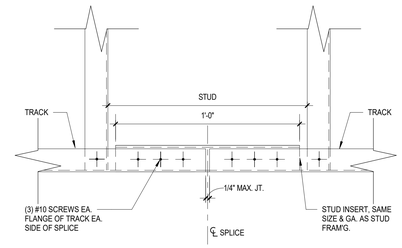

TYP. TRACK SPLICE ELEVATION | 3" = 1'-0" | 07

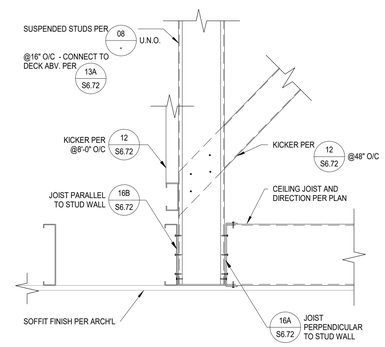

TYPICAL CHANGE IN CEILING SPAN DIRECTION1 | 1 1/2" = 1'-0" | 06

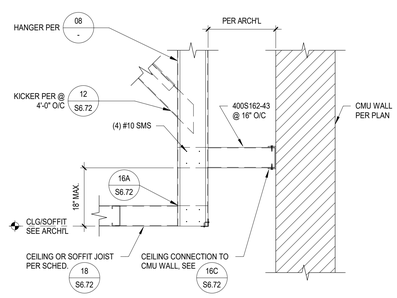

AT CMU WALL CONDITION (B)

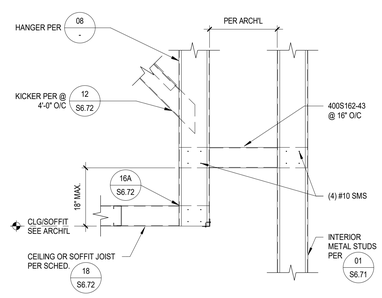

AT METAL STUD WALL CONDITION (A)

LIGHT COVE OR LINEAR DIFFUSER | 05

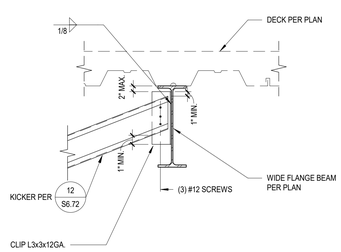

NOTE:
SEE 17/S6.74 FOR KICKER CONNECTION TO DECK

TYP. KICKER DETAIL to WIDE FLANGE BM. | 1" = 1'-0" | 12

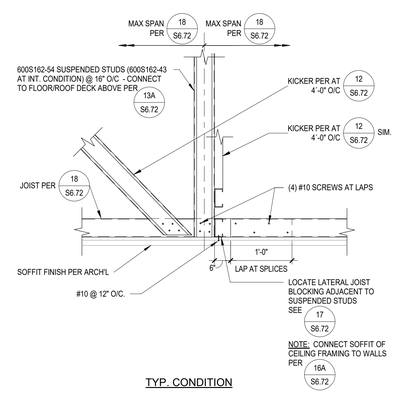

TYP. CONDITION

TYP. SOFFIT OR GYP. BD. CLG. SUSPENDED FROM FLR. OR ROOF FRMG. | 1" = 1'-0" | 08

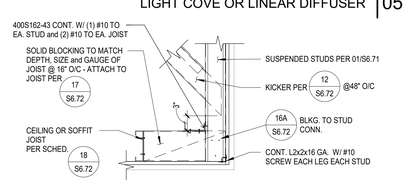

CEILING OR SOFFIT JOIST PARALLEL TO SUSPENDED STUD WALL (B)

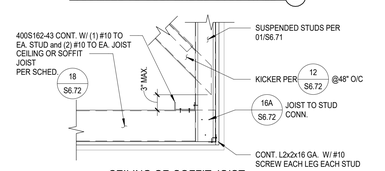

CEILING OR SOFFIT JOIST PERPENDICULAR TO SUSPENDED STUD WALL (A)

TYP. CEILING OR SOFFIT JOIST TO SUSPENDED WALL | 1" = 1'-0" | 04

IDENTIFICATION STAMP
DIV. OF THE STATE ARCHITECT
APP: 02-119490 INC:
REVIEWED FOR
SS ☑ FLS ☑ ACS ☑
DATE: 09/13/2022

INTERIORS
PLANNING

916-287-2400 Office

916-287-2401 Fax

LPADesignStudios.com

431 I Street,
Suite 107
Sacramento, California 95814

REGISTERED PROFESSIONAL ENGINEER
DANIEL S. WALTER
No. S4833
Exp. 12/31/22
STRUCTURAL
STATE OF CALIFORNIA

This document and all other project documents, ideas, aesthetics and designs incorporated therein are instruments of service. All project documents are copyright protected, are the property of LPA, Inc. (LPA) and cannot be lawfully used in whole or in part for any project or purpose except as set forth in the contractual agreement between LPA and its Client. The unauthorized disclosure and/or use of the project documents (including the creation of derivative works), may give rise to liability for copyright infringement, unlawful disclosure, use or misappropriation of property rights held by LPA. The unauthorized use of the project documents will give rise to the recovery of monetary losses and damages including attorney fees and costs for which the unauthorized user will be held liable.
Project documents describe the design intent of the work and are not a representation of as-built or existing conditions. LPA is not responsible for any discrepancies between the project documents and the existing conditions.

© LPA, Inc.

DAVIS SR HIGH SCHOOL AQUATICS CENTER

315 W 14TH ST., DAVIS, CA 95616

Developed for
DAVIS JOINT UNIFIED SCHOOL DISTRICT

Revision	Date

Submittal	Date
50% DD REVIEW	06/15/2021
100% DD SUBMITTAL	07/26/2021
50% CD REVIEW	10/08/2021
100% CD DSA SUBMITTAL	10/22/2021

Job Number	1904413
Date Published	06/15/2021
Checked By	DW
Scale	As indicated

TYPICAL LIGHT GAUGE METAL FRAMING DETAILS

S6.73

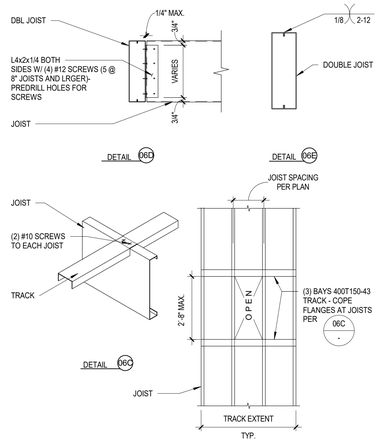

PLAN VIEW AT SMALL OPENINGS and PENETRATIONS

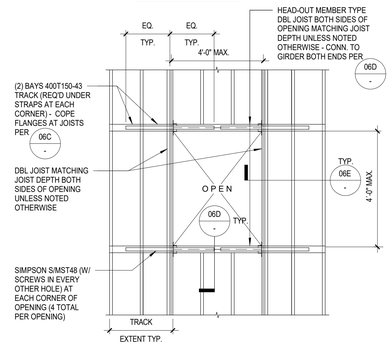

PLAN VIEW AT LARGER OPENINGS

CEILING OPENING DETAILS AT LIGHTING and MECH'L OPENING | 3/8" = 1'-0" | 06

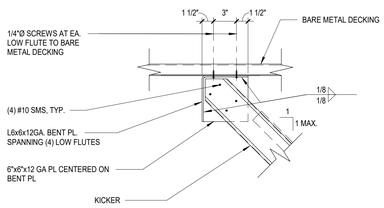

KICKER PARALLEL TO FLUTES 17B
AT BARE METAL DECK

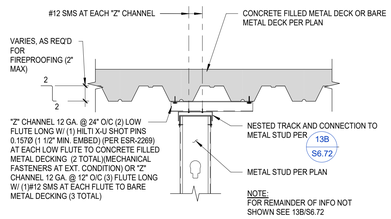

CONDITION WHERE WALL IS PARALLEL TO METAL DECKING SPAN

TYPICAL KICKER DETAIL TO METAL DECK | 1 1/2" = 1'-0" | 17

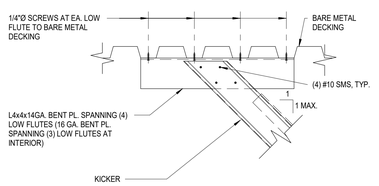

KICKER PERPENDICULAR TO FLUTES 17A
AT BARE METAL DECK

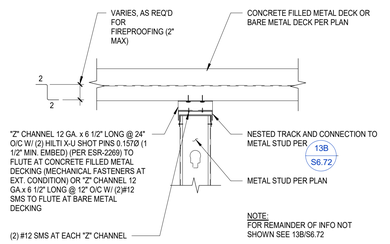

CONDITION AT ELEVATED CONCRETE DECKS OR CONDITION WHERE WALL IS SKEWED OR PERPENDICULAR TO METAL DECKING SPAN

SLIP CONN. AT TOP OF METAL STUD WALL TO DECK / BEAM AT FIREPROOFING | 1" = 1'-0" | 13

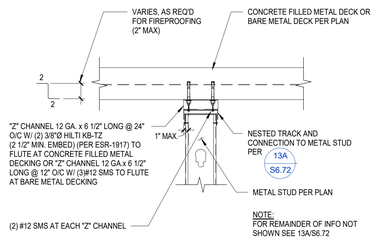

CONDITION AT ELEVATED CONCRETE DECKS OR CONDITION WHERE WALL IS SKEWED OR PERPENDICULAR TO METAL DECKING SPAN

RIGID CONN. AT TOP OF METAL STUD WALL TO DECK / BEAM AT FIRE PROOFING | 1" = 1'-0" | 05

IDENTIFICATION STAMP
DIV. OF THE STATE ARCHITECT
APP: 02-119490 INC:
REVIEWED FOR
SS ☑ FLS ☑ ACS ☑
DATE: 09/13/2022

INTERIORS
PLANNING

916-287-2400 Office

916-287-2401 Fax

LPADesignStudios.com

431 I Street,
Suite 107
Sacramento, California 95814

REGISTERED PROFESSIONAL ENGINEER
DANIEL S. WALTER
No. S4832
Exp. 12/31/22
STRUCTURAL
STATE OF CALIFORNIA

This document and all other project documents, ideas, aesthetics and designs incorporated therein are instruments of service. All project documents are copyright protected, are the property of LPA, Inc. (LPA) and cannot be lawfully used in whole or in part for any project or purpose except as set forth in the contractual agreement between LPA and its Client. The unauthorized disclosure and/or use of the project documents (including the creation of derivative works), may give rise to liability for copyright infringement, unlawful disclosure, use or misappropriation of property rights held by LPA. The unauthorized use of the project documents will give rise to the recovery of monetary losses and damages including attorney fees and costs for which the unauthorized user will be held liable.
Project documents describe the design intent of the work and are not a representation of as-built or existing conditions. LPA is not responsible for any discrepancies between the project documents and the existing conditions.

© LPA, Inc.

DAVIS SR HIGH SCHOOL AQUATICS CENTER

315 W 14TH ST., DAVIS, CA 95616

Developed for
DAVIS JOINT UNIFIED SCHOOL DISTRICT

Revision	Date

Submittal	Date
50% DD REVIEW	06/15/2021
100% DD SUBMITTAL	07/26/2021
50% CD REVIEW	10/08/2021
100% CD DSA SUBMITTAL	10/22/2021

Job Number	1904413
Date Published	06/15/2021
Checked By	JW/BN
Scale	As indicated

TYPICAL LIGHT GAUGE METAL FRAMING DETAILS

S6.74

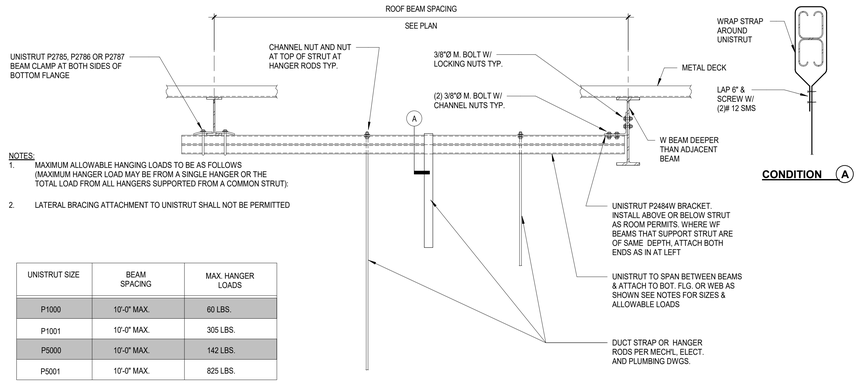

NOTES:
1. MAXIMUM ALLOWABLE HANGING LOADS TO BE AS FOLLOWS (MAXIMUM HANGER LOAD MAY BE FROM A SINGLE HANGER OR THE TOTAL LOAD FROM ALL HANGERS SUPPORTED FROM A COMMON STRUT):
2. LATERAL BRACING ATTACHMENT TO UNISTRUT SHALL NOT BE PERMITTED

UNISTRUT SIZE	BEAM SPACING	MAX. HANGER LOADS
P1000	10'-0" MAX.	60 LBS.
P1001	10'-0" MAX.	305 LBS.
P5000	10'-0" MAX.	142 LBS.
P5001	10'-0" MAX.	825 LBS.

CONDITION A

HANGER CONN. FOR SUSPENDED EQUIPMENT AT BARE METAL DECK AND ALTERNATE PIPING, CABLE TRAY and DUCT SUPPORT FRAMING | 12

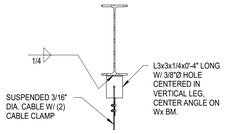

SUSPENSION CABLE TO BEAM ANCHORAGE
(For Light Fixtures less than 30# in weight.)

SUSPENSION ROD TO BEAM ANCHORAGE

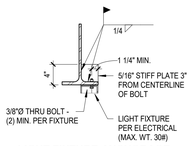

LIGHT FIXTURE ANCHORAGE

NOTE:
FOR HANGER BENEATH BARE METAL DECK, SEE 01 -

TYP. HANGER CONN. AT SUSPENDED EQUIPMENT DETAILS | 1" = 1'-0" | 19

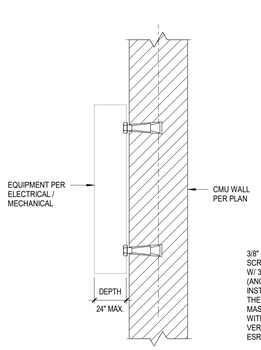

SECTION X-X

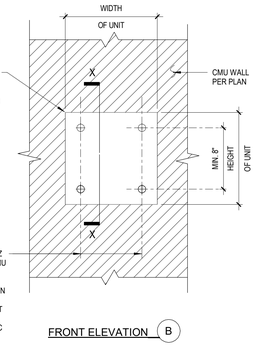

FRONT ELEVATION B

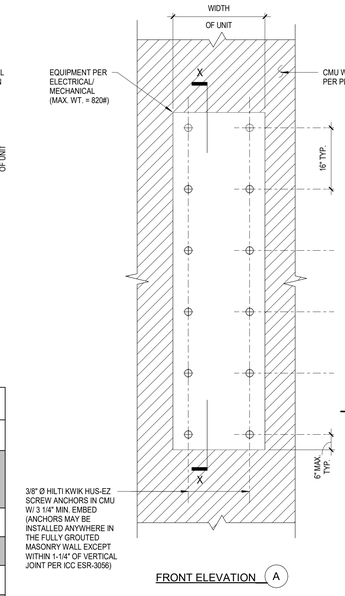

FRONT ELEVATION A

ANCHORAGE SCHEDULE - WALL MOUNTED EQUIPMENT

	EQUIPMENT	LOCATION (ROOM NO.)	FRONT ELEVATION	# FASTENERS	WEIGHT (lbs)	HEIGHT (in)	WIDTH (in)	DEPTH (in)
ELECTRICAL	SUB-PANELS	VARIOUS	A	12	808	86	42	9.5
MECHANICAL	FC-1	1004 ELECTRICAL	B	4	40	14	40	9
	FC-3	1018 IDF	B	4	40	14	40	9
TECHNOLOGY	IDF	-	A	6	500	47	24	33

WALL MOUNTED EQUIPMENT AT CMU WALL | 11

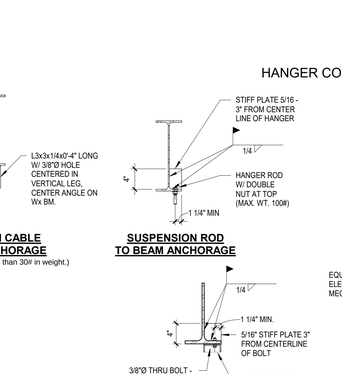

NOTE:
FOR REMAINDER OF INFORMATION REFER TO DETAIL 20/S6.62.

CURB ATTACHMENT ADJACET TO WALL C

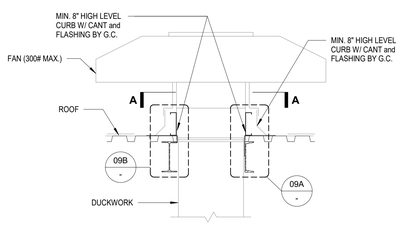

NOTE:
1. REFER TO ARCH'L DRAWINGS FOR ROOFING DETAILS. CONFIRM ROOF PITCH PRIOR TO CURB FABRICATION

ANCHORAGE SCHEDULE - MOUNTED EQUIPMENT

EQUIPMENT	LOCATION	WEIGHT (lbs)	MOUNTING SYSTEM
EF-1	MECHANICAL	190	11/M7.20
EF-2	MECHANICAL	190	11/M7.20
EF-3	MECHANICAL	300	11/M7.20
EF-4	MECHANICAL	80	11/M7.20
EF-5	RESTROOM	110	11/M7.20
EF-6	RESTROOM	80	11/M7.20
EF-7	RESTROOM	180	11/M7.20

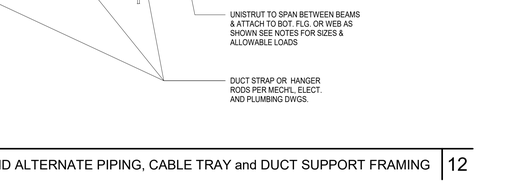

CURB ATTACHMENT B **CURB ATTACHMENT** A

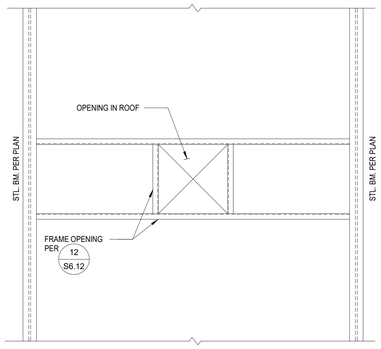

PLAN A-A

TYP. EXHAUST FAN | 09

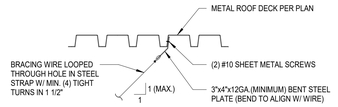

BRACING WIRE AT BARE METAL ROOF DECK FOR DUCTS ONLY G

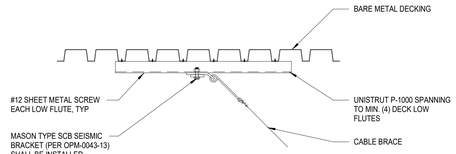

BRACE TO ROOF ANCHORAGE H

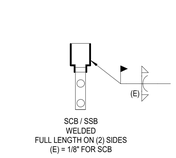

SECTION A-A

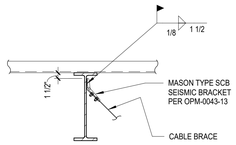

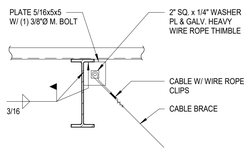

CONDITION C

CONDITION B

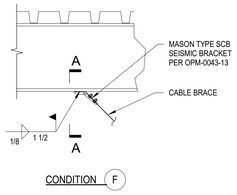

CONDITION F

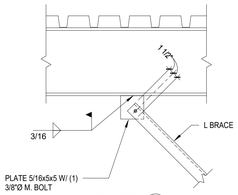

CONDITION D

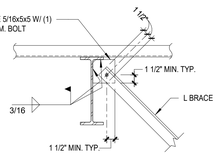

CONDITION A

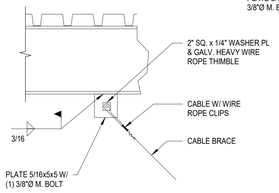

CONDITION E

BRACE LENGTH	< 8'
CABLE BRACE	1/4" DIA.
ANGLE BRACE	L2 1/2x2 1/2x1/4
UNISTRUT BRACE	P1000

NOTES:
1. SEE MECH'L, ELECT'L & PLUMBING DWGS. FOR SEISMIC BRACE SIZES. SEE TABLE FOR UNSPECIFIED SIZES.
2. BRACE END CONNECTIONS SHALL ONLY BE ATTACHED TO STEEL FRAMING AS SHOWN, NOT TO BARE ROOF METAL DECK.
3. SEE UNISTRUT PRODUCT DATA FOR MINIMUM INSTALLATION TORQUE AT M.B.

SEISMIC BRACE DETAILS OF DUCTS, PIPING and CABLE TRAYS OF ROOF FRAMING | 03

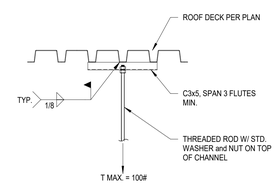

THREADED ROD HANGER AT BARE METAL ROOF DECK E

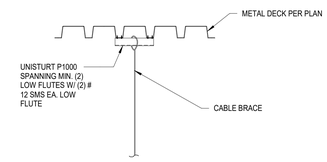

CABLE BRACE HANGER AT BARE METAL ROOF DECK F

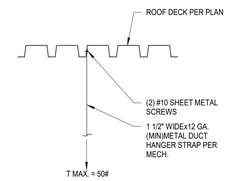

DUCT HANGER STRAP ATTACHMENT AT BARE METAL ROOF DECK B

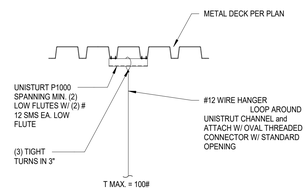

METAL CHAIN HANGER AT BARE METAL ROOF DECK C

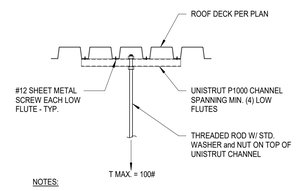

NOTES:
1. MINIMUM SPACING BETWEEN UNISTRUT SUPPORT CHANNELS PARALLEL WITH ROOF DECK FLUTES IS 4'-0" O/C
2. TWO (2) THREADED ROD HANGERS MAY BE ATTACHED TO SINGLE UNISTRUT CHANNEL PROVIDED TOTAL LOAD FROM BOTH HANGER RODS DOES NOT EXCEED MAXIMUM TENSION SPECIFIED.
3. THIS DETAL APPLIES TO HANGER RODS ONLY and IS NOT PERMISSIBLE FOR USE FOR UTILITY BRACING ASSEMBLIES.

THREADED ROD HANGER AT BARE METAL ROOF DECK A

TYP. PIPING, CABLE TRAY and, DUCT SUPPORT | 01

IDENTIFICATION STAMP
DIV. OF THE STATE ARCHITECT
APP: 02-119490 INC:
REVIEWED FOR
SS ☑ FLS ☑ ACS ☑
DATE: 09/13/2022

INTERIORS
PLANNING
916-287-2400 Office
916-287-2401 Fax
LPADesignStudios.com
431 I Street,
Suite 107
Sacramento, California 95814

REGISTERED PROFESSIONAL ENGINEER DANIEL S. WALTER No. S4853 Exp. 12/31/22 STRUCTURAL STATE OF CALIFORNIA

This document and all other project documents, ideas, aesthetics and designs incorporated therein are instruments of service. All project documents are copyright protected, are the property of LPA, Inc. (LPA) and cannot be lawfully used in whole or in part for any project or purpose except as set forth in the contractual agreement between LPA and its Client. The unauthorized disclosure and/or use of the project documents (including the creation of derivative works), may give rise to liability for copyright infringement, unlawful disclosure, use or misappropriation of property rights held by LPA. The unauthorized use of the project documents will give rise to the recovery of monetary losses and damages including attorney fees and costs for which the unauthorized user will be held liable.
Project documents describe the design intent of the work and are not a representation of as-built or existing conditions. LPA is not responsible for any discrepancies between the project documents and the existing conditions.
© LPA, Inc.

DAVIS SR HIGH SCHOOL AQUATICS CENTER
315 W 14TH ST., DAVIS, CA 95616
Developed for
DAVIS JOINT UNIFIED SCHOOL DISTRICT

Revision	Date

Submittal	Date
50% DD REVIEW	06/15/2021
100% DD SUBMITTAL	07/26/2021
50% CD REVIEW	10/08/2021
100% CD DSA SUBMITTAL	10/22/2021

Job Number	1904413
Date Published	06/15/2021
Checked By	
Scale	As indicated

TYP. EQUIPMENT ANCHORAGE DETAILS

S6.91

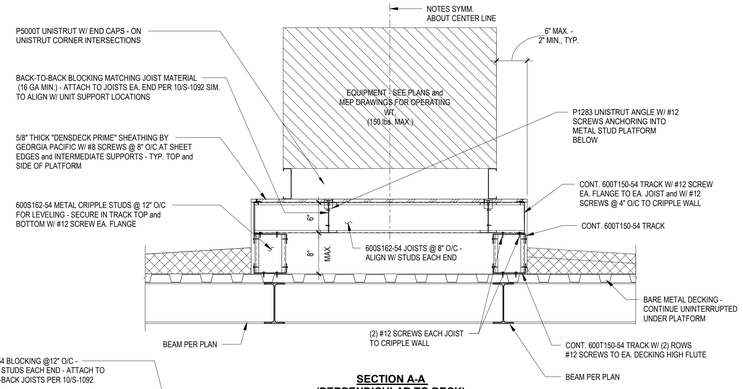

SECTION A-A (PERPENDICULAR TO DECK)

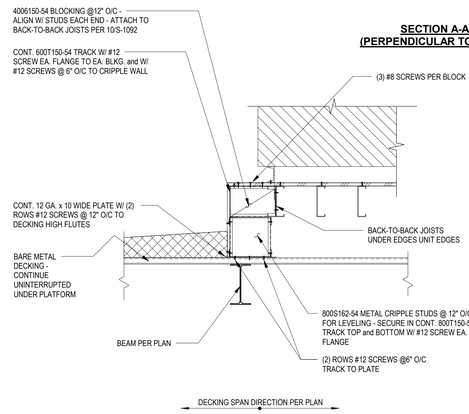

SECTION B-B (PARALLEL TO DECK)

METAL STUD EQUIPMENT PLATFORM | 15

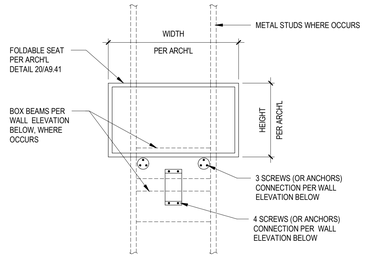

TYPICAL ELEVATION (B)

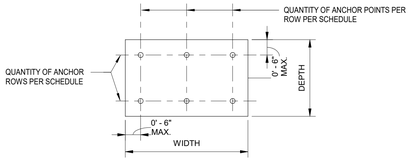

PLAN VIEW INTERIOR MOUNTING (B)

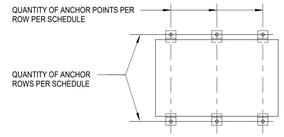

PLAN VIEW EXTERIOR MOUNTING (C)

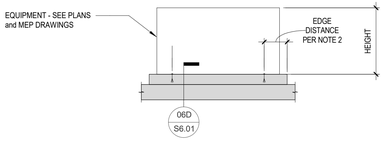

AT SLAB ON GRADE

TYPICAL ELEVATIONS (A)

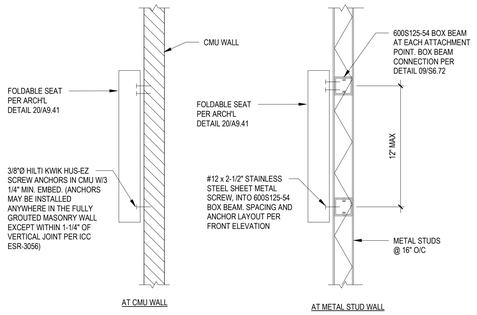

SIDE ELEVATION (A)

TYP. WALL MOUNTED EQUIPMENT | 11

ANCHORAGE SCHEDULE - FLOOR MOUNTED EQUIPMENT

	EQUIPMENT	MAX WEIGHT (lbs)	HEIGHT (in)	WIDTH (in)	DEPTH (in)	MECHANICAL ANCHORS (PER GENERAL NOTES) - SEE NOTE 1				LOCATION (ROOM NO.)
						MECH'L ANCH.Ø	QUANTITY OF ANCHOR ROWS	QUANTITY OF ANCHOR POINTS PER ROW	QUANTITY OF ANCHOR POINTS	
ELECTRICAL										
	T1	1100	46	32	24	1/2"Ø	2	2	4	
	INVERTER	280	47	30	25	1/2"Ø	2	2	4	
PLUMBING	PB-1	465	58	31.25	33.75	1/2"Ø	2	2	4	

NOTE:
1. INSTALL PER ICC ESR-4266 WITH SPECIAL INSPECTION.
2. FOR 1/2" Ø S.S. HILTI KB-TZ2, PROVIDE MIN. 3 1/4" EMBED, MIN. 6" THICK CONCRETE, MIN. 6" EDGE DISTANCE, AND MIN 6" SPACING IN MIN. 4,000 psi NORMAL WT. CONCRETE AT PAD.
3. AT MECHANICAL UNITS W/ ANCHOR POINTS PER MANUFACTURER, HOLE DIAMETER NOT TO EXCEED BOLT DIAMETER +1/8", PROVIDE LARGER ANCHOR AS REQUIRED.

FLOOR MOUNTED EQUIPMENT SCHEDULE and DETAILS | 03

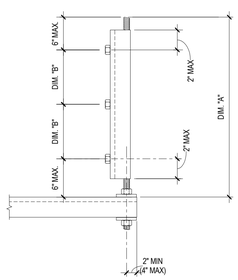

ROD STIFFENER CHART						
THREADED ROD DIAMETER		DIM. "A" MAXIMUM ROD LENGTH WITHOUT STIFFENER		DIM. "B" MAXIMUM SPACING BETWEEN ROD STIFFENERS		MAX. REACTION
in	(mm)	in	(mm)	in	(mm)	
3/8"	(10)	16"	(406)	13"	(330)	790 LBS
1/2"	(13)	22"	(559)	18"	(457)	1460 LBS

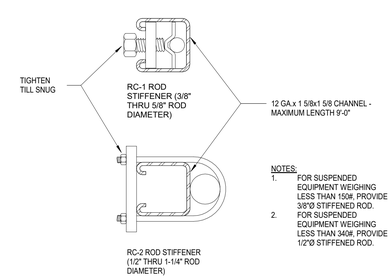

NOTES:
1. FOR SUSPENDED EQUIPMENT WEIGHING LESS THAN 150#, PROVIDE 3/8"Ø STIFFENED ROD.
2. FOR SUSPENDED EQUIPMENT WEIGHING LESS THAN 340#, PROVIDE 1/2"Ø STIFFENED ROD.

ROD STIFFENER REQUIREMENTS FOR EQUIPMENT CABLE BRACING (D)

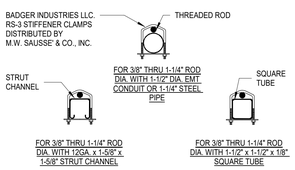

STIFFENERS TO SUSPENSION RODS (C)

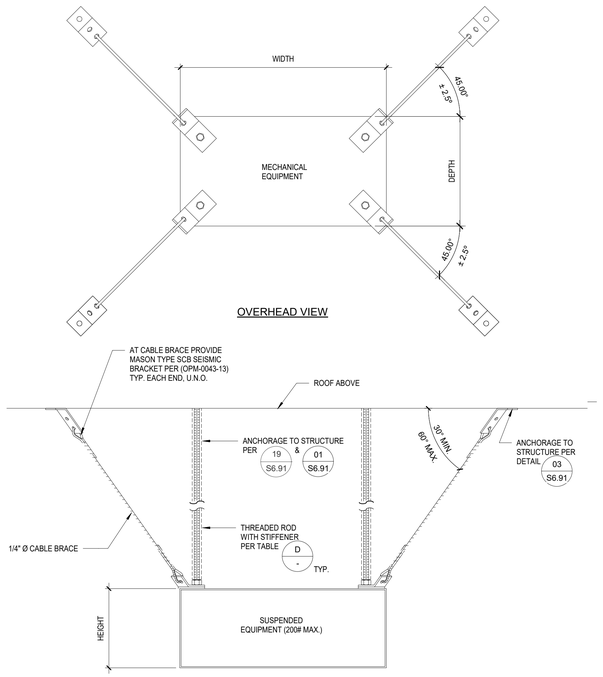

TYPICAL ELEVATION (A)

SUSPENDED EQUIPMENT DETAILS AND SCHEDULE | 09

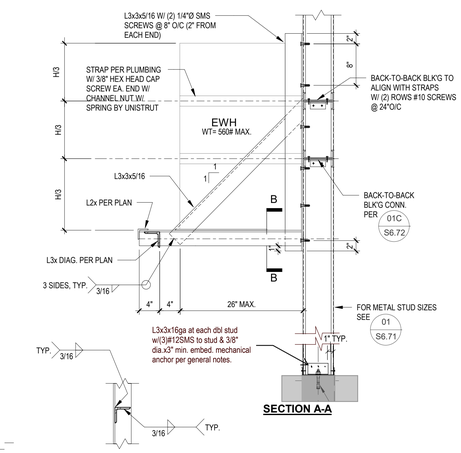

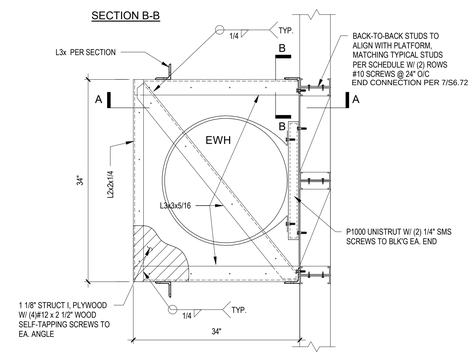

PLAN VIEW

WATER HEATER PLATFORM | 05

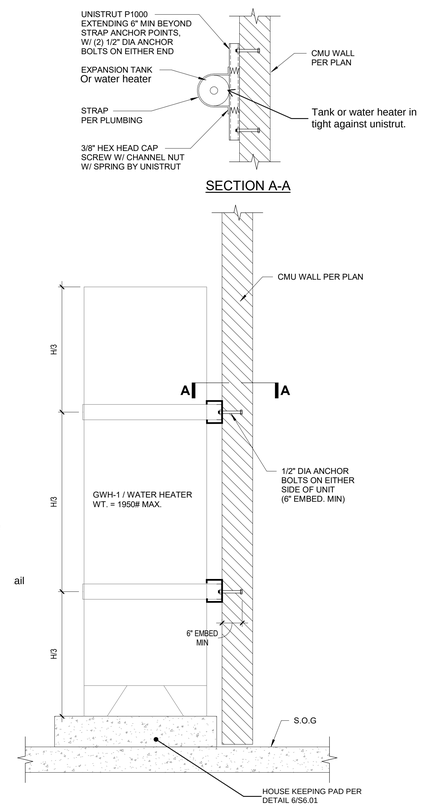

WATER HEATHER SEISMIC BRACING | 01

IDENTIFICATION STAMP
DIV. OF THE STATE ARCHITECT
APP: 02-119490 INC:
REVIEWED FOR
SS ☑ FLS ☑ ACS ☑
DATE: 09/13/2022

INTERIORS
PLANNING

916-287-2400 Office
916-287-2401 Fax
LPADesignStudios.com
431 I Street,
Suite 107
Sacramento, California 95814

REGISTERED PROFESSIONAL ENGINEER DANIEL S. WALTER No. S4853 Exp. 12/31/22 STRUCTURAL STATE OF CALIFORNIA

This document and all other project documents, ideas, aesthetics and designs incorporated therein are instruments of service. All project documents are copyright protected, are the property of LPA, Inc. (LPA) and cannot be lawfully used in whole or in part for any project or purpose except as set forth in the contractual agreement between LPA and its Client. The unauthorized disclosure and/or use of the project documents (including the creation of derivative works), may give rise to liability for copyright infringement, unlawful disclosure, use or misappropriation of property rights held by LPA. The unauthorized use of the project documents will give rise to the recovery of monetary losses and damages including attorney fees and costs for which the unauthorized user will be held liable.
Project documents describe the design intent of the work and are not a representation of as-built or existing conditions. LPA is not responsible for any discrepancies between the project documents and the existing conditions.

© LPA, Inc.

DAVIS SR HIGH SCHOOL AQUATICS CENTER

315 W 14TH ST., DAVIS, CA 95616

Developed for
DAVIS JOINT UNIFIED SCHOOL DISTRICT

Revision	Date

Submittal	Date
50% DD REVIEW	06/15/2021
100% DD SUBMITTAL	07/26/2021
50% CD REVIEW	10/08/2021
100% CD DSA SUBMITTAL	10/22/2021

Job Number	1904413
Date Published	06/15/2021
Checked By	Checker
Scale	As indicated

TYP. EQUIPMENT ANCHORAGE DETAILS

S6.92

ABBREVIATIONS

ABBREVIATION	DESCRIPTION
A	AIR, AMPS
AAV	AUTOMATIC AIR VENT
ABV	ABOVE
AC	AIR CONDITIONING
AD	ACCESS DOOR
AFF	ABOVE FINISH FLOOR
AFUE	ANNUAL FUEL UTILIZATION EFFICIENCY
AHJ	AUTHORITY HAVING JURISDICTION
AHU	AIR HANDLING UNIT
AMB	AMBIENT
APD	AIR PRESSURE DROP
ASHRAE	AMERICAN SOCIETY OF HEATING, REFRIGERATION AND AIR-CONDITIONING ENGINEERS, INC.
ASSY	ASSEMBLY
ATM	ATMOSPHERE
B	BOILER
BFF	BELOW FINISHED FLOOR
BHP	BRAKE HORSE POWER
BEL	BELOW
BOD	BOTTOM OF DUCT
BOP	BOTTOM OF PIPE
BTUH	BRITISH THERMAL UNIT PER HOUR
BV	BALL VALVE
C	CONDENSATE PIPING
CA	COMPRESSED AIR
CAP	CAPACITY
CD	CEILING DIFFUSER, CONDENSATE DRAIN
CFG	CEILING FIRE DAMPER
CFM	CUBIC FEET PER MINUTE
CG	CEILING GRILLE
CH	CHILLER
CHR	CHILLED WATER RETURNED
CHS	CHILLED WATER SUPPLY
CV	CHECK VALVE
CLG	CEILING, COOLING
CO	CARBON MONOXIDE SENSOR
CO2	CARBON DIOXIDE SENSOR
COMB	COMBINATION, COMBUSTION
COND	CONDENSER, CONDENSATE
CONT	CONTINUE, CONTROL
COP	COEFFICIENT OF PERFORMANCE
CR	CONDENSER WATER RETURN
CS	CONDENSER WATER SUPPLY
Cx	COMISSIONING
CxA	COMISSIONING AGENT
(D)	DEMOLISH
DB	DRY BULB
dB	DECIBEL
DDC	DIRECT DIGITAL CONTROL
DIA	DIAMETER
DN	DOWN
Ø	DIAMETER
EXIST	EXISTING
(E)	EXISTING
EA	EXHAUST AIR
EAT	ENTERING AIR TEMPERATURE
EER	ENERGY EFFICIENCY RATIO
EF	EXHAUST FAN
EG	EXHAUST GRILLE
ELEC	ELECTRICAL
EMS	ENERGY MANAGEMENT SYSTEM
EQUIV	EQUIVALENT
ESP	EXTERNAL STATIC PRESSURE
ET	EXPANSION TANK
EVAP	EVAPORATOR, EVAPORATIVE
EWT	ENTERING WATER TEMPERATURE
F	FAHRENHEIT
FC	FLUID COOLER
FCU	FAN COIL UNIT
FD	FIRE DAMPER
FLA	FULL LOAD AMPS
FLR	FLOOR
FLTR	FILTER
FPM	FEET PER MINUTE
FPS	FEET PER SECOND
FSD	COMBINATION FIRE SMOKE DAMPER
FT	FOOT, FEET
FV	FACE VELOCITY
GA	GAGE
GAL	GALLONS
GPM	GALLONS PER MINUTE
GRD	GRILLES, REGISTERS, AND DIFFUSERS
GWR	GLYCOL WATER RETURN PIPING
GWS	GLYCOL WATER SUPPLY PIPING
H	HUMIDISTAT, HEIGHT
HD	HEAD
HORIZ	HORIZONTAL
HP	HORSE POWER, HEAT PUMP
HTG	HEATING
HVAC	HEATING VENTILATION AND AIR CONDITIONING
HWR	HEATING WATER RETURN
HWS	HEATING WATER SUPPLY
HZ	HERTZ
IAQ	INDOOR AIR QUALITY
IN	INCHES
IN WC	INCHES WATER COLUMN
KW	KILOWATT
LAT	LEAVING AIR TEMPERATURE
LBS	POUNDS
LRA	LOCKED ROTOR AMPS
LVR	LOUVER
LWT	LEAVING WATER TEMPERATURE
MAT	MIXED AIR TEMPERATURE
MBH	THOUSAND BRITISH THERMAL UNITS PER HOUR
MECH	MECHANICAL
MERV	MINIMUM EFFICIENCY REPORTING VALUE
MC	MECHANICAL CONTRACTOR
MCA	MINIMUM CIRCUIT AMPACITY
MOCP	MAXIMUM OVER CURRENT PROTECTION
NA	NOT APPLICABLE
NC	NORMALLY CLOSED, NOISE CRITERIA
NIC	NOT IN CONTRACT
NO	NORMALLY OPEN
NTS	NOT TO SCALE
OA	OUTSIDE AIR
OBD	OPPOSED BLADE DAMPER
OC	ON CENTER
OD	OUTSIDE DIAMETER
OED	OPEN END DUCT
P	PUMP
PD	PRESSURE DROP
POC	POINT OF CONNECTION
POD	POINT OF DISCONNECTION
PRV	PRESSURE REDUCING VALVE
PSI	POUNDS PER SQUARE INCH
RA	RETURN AIR, RELIEF AIR
REF	REFRIGERANT
RG	RETURN GRILLE
RH	RELATIVE HUMIDITY
RL	REFRIGERANT LIQUID LINE
RLA	RATED LOAD AMPS
RPM	REVOLUTIONS PER MINUTE
RTU	ROOF TOP UNIT
S	SENSOR
SA	SUPPLY AIR, SOUND ATTENUATOR
SAT	SUPPLY AIR TEMPERATURE
SF	SUPPLY FAN, SQUARE FOOT
SG	SUPPLY GRILLE
SIM	SIMILAR
SL	REFRIGERANT SUCTION LINE
SMACNA	SHEET METAL AND AIR-CONDITIONING CONTRACTOR NATIONAL ASSOCIATION
SOO	SEQUENCE OF OPERATION
ST	SOUND TRAP
TD	TEMPERATURE DIFFERENCE
TDH	TOTAL DYNAMIC HEAD
TEMP	TEMPERATURE
TG	TRANSFER GRILLE
TOD	TOP OF DUCT
TOP	TOP OF PIPE
TOS	TOP OF STEEL / STRUCTURE
TSP	TOTAL STATIC PRESSURE
T'STAT	THERMOSTAT
TU	TERMINAL UNIT
TYP	TYPICAL
UH	UNIT HEATER
V	VOLT
VAV	VARIABLE AIR VOLUME
VD	VOLUME DAMPER
VEL	VELOCITY
VENT	VENTILATION, VENTILATOR
VFD	VARIABLE FREQUENCY DRIVE
W	WATT, WIDE, WATER
W/	WITH
W/O	WITHOUT
WB	WET BULB TEMPERATURE
WMS	WIRE MESH SCREEN
WT	WEIGHT

MECH LEGEND

(NOT TO SCALE)

SYMBOL	DESCRIPTION
	SUPPLY DIFFUSER
	RETURN GRILLE
	EXHAUST GRILLE
	FLEXIBLE CONNECTION
	TRANSITION - RECTANGULAR TO ROUND
24x10	DUCT SIZE (CLEAR INSIDE DIMENSION IN INCHES)
	SOUNDLINED DUCTWORK
	SUPPLY AIR DUCT UP AND DOWN
	RETURN AIR DUCT UP AND DOWN
	EXHAUST AIR DUCT UP AND DOWN
	SUPPLY DUCT ROOF PENETRATION
	RETURN DUCT ROOF PENETRATION
	EXHAUST DUCT ROOF PENETRATION
	RECTANGULAR DUCT UP
	RECTANGULAR DUCT DN
	ROUND OR OVAL DUCT UP
	ROUND OR OVAL DUCT DN
	DUCT RISE / DROP W/ 90° ELBOWS (RECTANGULAR DUCTS)
	DUCT RISE / DROP W/ 45° ELBOWS (RECTANGULAR DUCTS)
	DUCT RISE / DROP W/ 90° ELBOWS (ROUND AND / OR OVAL DUCT)
	DUCT RISE / DROP W/ 45° ELBOWS (ROUND AND / OR OVAL DUCTS)
	WYE AND 45° ELBOW W/ REDUCER (ROUND AND / OR OVAL DUCT)
	TRANSITION OR REDUCER
	TRANSITION - ECCENTRIC
	45° ELBOW, R/D OR R/W=1.5
	90° ELBOW, R/D OR R/W=1.5
	MITERED ELBOW WITH TURNING VANES
	90° STRAIGHT TAP
	90° CONICAL TAP
	90° TAP WITH 45° BEVEL
	45° TAP
	RADIUS TAP IN
	WYE FITTING
	RADIUS TEE
	SQUARE TEE W/ TURNING VANES
	BULLHEAD TEE
CHS	CHILLED WATER SUPPLY PIPING
CHR	CHILLED WATER RETURN PIPING
HWS	HEATING WATER SUPPLY PIPING
HWR	HEATING WATER RETURN PIPING
REF	REFRIGERANT PIPING
	SHUT-OFF VALVE ABOVE GRADE
	CONTINUATION OF PIPING
	CONTINUATION OF DUCT
SD	DUCT SMOKE DETECTOR
	SMOKE DAMPER
	FIRE DAMPER
	BACK DRAFT DAMPER
	FIRE / SMOKE DAMPER
	MANUAL VOLUME DAMPER
	ELECTRONIC REMOTE DAMPER
	MECHANICAL REMOTE DAMPER
RDCL	REMOTE DAMPER CONTROL LOCATION
	POINT OF CONNECTION
	POINT OF DISCONNECTION
OS	OCCUPANCY SENSOR

ANNOTATION SYMBOLS

(NOT TO SCALE)

SYMBOL	DESCRIPTION
S-1; 12"	DIFFUSER IDENTIFICATION, NECK SIZE
200 TYP.3	AIR FLOW, NUMBER OF OCCURRENCES
1	DETAIL NUMBER
M7.01	SHEET NUMBER
D/L	DOOR LOUVER
T/L	TRANSOM LOUVER
U/C	UNDERCUT DOOR
SA	SUPPLY AIR FLOW DIRECTION
OA	OUTSIDE AIR FLOW DIRECTION
EA	EXHAUST AIR FLOW DIRECTION
RA	RETURN AIR FLOW DIRECTION
?	KEYNOTE SYMBOL
?	EQUIPMENT TAG SYMBOL

CONTROL DIAGRAM

SYMBOL	DESCRIPTION	SYMBOL	DESCRIPTION
MD	MOTORIZED DAMPER	WC	OPERABLE WINDOW CONTACT
SD	DUCT SMOKE DETECTOR	DC	OPERABLE DOOR CONTACT
T	TEMPERATURE TRANSMITTER	BP	BUILDING PRESSURE TRANSMITTER
A	AQUASTAT	DP	DIFFERENTIAL PRESSURE TRANSMITTER
AF	AIRFLOW MEASURING UNIT		
SP	DUCT STATIC PRESSURE TRANSMITTER		

GENERAL STRUCTURAL NOTES

1. ALL EQUIPMENT, PIPING, UTILITIES, AND THEIR CONNECTIONS SHALL BE SEISMICALLY BRACED PER LATEST CBC AND EQUIPMENT ANCHORAGE FOR PIPING, DUCTWORK, AND ELECTRICAL DISTRIBUTION SYSTEM BRACING NOTES PER STRUCTURAL DRAWINGS.
2. LIMITS TO NON-STRUCTURAL ITEMS SUSPENDED FROM CONCRETE FILLED METAL DECKING: HANGERS SUPPORTED BY METAL DECKING WITH STRUCTURAL CONCRETE FILL MAY BE INSTALLED USING ICC-ES APPROVED ANCHORAGE SYSTEMS. DO NOT SUPPORT UTILITIES FROM METAL DECK WITHOUT CONCRETE. HANGERS FROM CONCRETE FILLED DECK, WHERE OCCURS, ARE LIMITED TO 4-INCH DIAMETER PIPE MAXIMUM. LOCATE HANGERS TWO FLUTES APART ON SAME DECK SPAN. SUPPORT LARGER PIPING FROM STRUCTURAL BEAMS OR COLUMNS. ADD DOUBLE UNISTRUT SPREADERS AS NECESSARY.
3. PROVIDE SHOP DRAWINGS WITH LARGE SCALE PLANS AND SECTIONS SHOWING HANGERS AND BRACING LOCATIONS. SHOP DRAWINGS SHALL BE PREPARED BY A STRUCTURAL ENGINEER LICENSED IN THE STATE OF CALIFORNIA AND SHALL BE STAMPED AND SIGNED. INDICATE HANGERS AND BRACING LOADS ON STRUCTURAL FRAMING PLANS.
4. EXPANSION ANCHORS AND EPOXY ANCHORS, WHERE USED, SHALL HAVE A MINIMUM EMBEDMENT OF EIGHT TIMES THE ANCHOR DIAMETER AND A MINIMUM EDGE DISTANCE OF 10 TIMES THE DIAMETER. EXPANSION ANCHORS AND EPOXY ANCHORS MUST HAVE CURRENT AND VALID ICC REPORT. SHOT PINS ARE NOT ACCEPTABLE.
5. UNLESS SPECIFIED ON STRUCTURAL DRAWINGS, ANY ALTERATIONS OR MODIFICATIONS TO A STRUCTURAL ELEMENT BY CUTTING, DRILLING, BORING, BRACING, WELDING, ETC. SHALL HAVE WRITTEN APPROVAL BY THE STRUCTURAL ENGINEER OF RECORD AND DSA PRIOR TO STARTING WORK.
6. SEE GENERAL NOTES ON STRUCTURAL DRAWINGS FOR ADDITIONAL REQUIREMENTS.

MEP SYSTEMS COMPONENT ANCHORAGE AND BRACING NOTES

MEP COMPONENT ANCHORAGE NOTE

1. ALL MECHANICAL, PLUMBING, AND ELECTRICAL COMPONENTS SHALL BE ANCHORED AND INSTALLED PER THE DETAILS ON THE DSA APPROVED CONSTRUCTION DOCUMENTS. THE FOLLOWING COMPONENTS SHALL BE ANCHORED OR BRACED TO MEET THE FORCE AND DISPLACEMENT REQUIREMENTS PRESCRIBED IN THE 2019 CBC, SECTIONS 1617A.1.18 THROUGH 1617A.1.26 AND ASCE 7-16 CHAPTERS 13, 26 AND 30:
   A. ALL PERMANENT EQUIPMENT AND COMPONENTS.
   B. TEMPORARY, MOVEABLE OR MOBILE EQUIPMENT THAT IS PERMANENTLY ATTACHED (e.g. HARD WIRED) TO THE BUILDING UTILITY SERVICES SUCH AS ELECTRICITY, GAS OR WATER. "PERMANENTLY ATTACHED" SHALL INCLUDE ALL ELECTRICAL CONNECTIONS EXCEPT PLUGS FOR 110/220 VOLT RECEPTACLES HAVING A FLEXIBLE CABLE.
   C. TEMPORARY, MOVABLE OR MOBILE EQUIPMENT WHICH IS HEAVIER THAN 400 POUNDS OR HAS A CENTER OF MASS LOCATED 4 FEET OR MORE ABOVE THE ADJACENT FLOOR OR ROOF LEVEL THAT DIRECTLY SUPPORT THE COMPONENT IS REQUIRED TO BE RESTRAINED IN A MANNER APPROVED BY DSA.
2. THE FOLLOWING MECHANICAL AND ELECTRICAL COMPONENTS SHALL BE POSITIVELY ATTACHED TO THE STRUCTURE, BUT NEED NOT DEMONSTRATE DESIGN COMPLIANCE WITH THE REFERENCES NOTED ABOVE. THESE COMPONENTS SHALL HAVE FLEXIBLE CONNECTIONS PROVIDED BETWEEN THE COMPONENT AND ASSOCIATED DUCTWORK, PIPING, AND CONDUIT. FLEXIBLE CONNECTIONS MUST ALLOW MOVEMENT IN BOTH TRANSVERSE AND LONGITUDINAL DIRECTIONS:
   A. COMPONENTS WEIGHING LESS THAN 400 POUNDS AND HAVE A CENTER MASS LOCATED 4 FEET OR LESS ABOVE THE ADJACENT FLOOR OR ROOF LEVEL THAT DIRECTLY SUPPORT THE COMPONENT.
   B. COMPONENTS WEIGHING LESS THAN 20 POUNDS, OR IN THE CASE OF DISTRIBUTED SYSTEMS, LESS THAN 5 POUNDS PER FOOT, WHICH ARE SUSPENDED FROM A ROOF OR FLOOR OR HUNG FROM A WALL.
3. THE ANCHORAGE OF ALL MECHANICAL, ELECTRICAL AND PLUMBING COMPONENTS SHALL BE SUBJECT TO THE APPROVAL OF THE DESIGN PROFESSIONAL IN GENERAL RESPONSIBLE CHARGE OR STRUCTURAL ENGINEER DELEGATED RESPONSIBILITY AND ACCEPTANCE BY DSA. THE PROJECT INSPECTOR WILL VERIFY THAT ALL COMPONENTS AND EQUIPMENT HAVE BEEN ANCHORED IN ACCORDANCE WITH ABOVE REQUIREMENTS.

PIPING DUCTWORK AND ELECTRICAL DISTRIBUTION SYSTEM BRACING NOTE

4. PIPING, DUCTWORK, AND ELECTRICAL DISTRIBUTION SYSTEMS SHALL BE BRACED TO COMPLY WITH THE FORCES AND DISPLACEMENTS PRESCRIBED IN ASCE 7-16 SECTION 13.3 AS DEFINED IN ASCE 7-16 SECTIONS 13.6.5, 13.6.6, 13.6.7, 13.6.8; AND 2019 CBC, SECTIONS 1617A.1.24, 1617A.1.25 AND 1617A.1.26.
5. THE METHOD OF SHOWING BRACING AND ATTACHMENTS TO THE STRUCTURE FOR THE IDENTIFIED DISTRIBUTION SYSTEM ARE AS NOTED BELOW. WHEN BRACING AND ATTACHMENTS ARE BASED ON A PREAPPROVED INSTALLATION GUIDE (e.g. OSHPD OPM FOR 2013 CBC OR LATER), COPIES OF THE BRACING SYSTEM INSTALLATION GUIDE OR MANUAL SHALL BE AVAILABLE ON THE JOBSITE PRIOR TO THE START OF AND DURING THE HANGING AND BRACING OF THE DISTRIBUTION SYSTEMS. THE STRUCTURAL ENGINEER OF RECORD SHALL VERIFY THE ADEQUACY OF THE STRUCTURE TO SUPPORT THE HANGER AND BRACE LOADS.
6. MECHANICAL PIPING (MP), MECHANICAL DUCTS (MD), PLUMBING PIPING (PP), ELECTRICAL DISTRIBUTION SYSTEMS (E):

MP	MD	PP	E	
■	■	☐	☐	OPTION 1: DETAILED ON THE APPROVED DRAWINGS WITH PROJECT SPECIFIC NOTES AND DETAILS.
☐	☐	☐	☐	OPTION 2: SHALL COMPLY WITH THE APPLICABLE PRE-APPROVAL (OPM#): MASON WEST 0043-13 OR MW SAUSSE 0203-13

CONTROL SYSTEM (PLAN VIEW)

TYPE	DESCRIPTION
T	THERMOSTAT
Z	ZONE TEMPERATURE SENSOR - W/ LOCAL OVERRIDE / DISPLAY
S	SPACE TEMPERATURE SENSOR- STAINLESS STEEL FLAT PLATE
R	HUMIDISTAT OR HUMIDITY SENSOR
C	CARBON DIOXIDE SENSOR
CO	CARBON MONOXIDE SENSOR

EXAMPLE

TCR = THERMOSTAT WITH CO2 AND HUMIDISTAT SENSOR

DEFINITION:

THERMOSTAT - FACTORY PROVIDED WITH ON-BOARD CONTROL LOGIC AND LOCAL USEABILITY CONTROLS. CONNECT TO EMS FOR MONITORING ONLY.

ZONE TEMPERATURE SENSOR W/ LOCAL OVERRIDES - FIELD PROVIDED SENSOR WITH WIRING TO CENTRAL EMS WITH LOCAL USER OVERRIDE CONTROLS. MOUNT FLUSH AND AT EQUAL HEIGHT WITH LIGHT SWITCHES AND OTHER DEVICES. SENSOR MODEL TO BE APPROVED BY THE ARCHITECT.

SPACE TEMPERATURE SENSOR W/O LOCAL OVERRIDES - FIELD PROVIDED SENSOR WITH WIRING TO CENTRAL EMS WITHOUT LOCAL USER OVERRIDE CONTROLS EQUAL TO KELE ST-S. EXACT SENSOR TYPE TO MATCH ARCHITECTURAL FEATURES AND TO BE APPROVED BY THE ARCHITECT.

SYMBOL	DESCRIPTION
	AUTOMATIC CONTROL VALVE, 3-WAY
	AUTOMATIC CONTROL VALVE, 2-WAY
DDC	MAIN BUILDING DIRECT DIGITAL CONTROL PANEL
VFD	VARIABLE FREQUENCY DRIVE

GENERAL CONTROL NOTES

1. BUILDING EMS TO INTERCONNECT WITH EXISTING CAMPUS EMS SYSTEM FOR FULL CONTROL AND MONITORING.
2. BUILDING EMS TO CONNECT TO LIGHTING CONTROL PANELS THROUGH BACNET INTERFACE CARD.
3. BUILDING CONTROLS TO COMPLY WITH OWNER CONTROLS STANDARDS.
4. MOTOR STARTERS SHALL BE PROVIDED BY ELECTRICAL CONTRACTOR. STARTERS SHALL BE EQUAL TO CERUS MODEL 'BAS'.

GENERAL NOTES

1. ALL CONSTRUCTION AND MATERIALS SHALL BE AS SPECIFIED AND IN ACCORDANCE WITH ALL APPLICABLE CODES, ORDINANCES, LAWS, PERMITS, AND THE CONTRACT DOCUMENTS.
2. THE CONTRACTOR SHALL BE RESPONSIBLE FOR THE ACCURATE PLACEMENT OF ALL NEW CONSTRUCTION ON THE SITE.
3. THE CONTRACTOR SHALL VERIFY ALL SITE CONDITIONS AND DIMENSIONS, AND EXACT LOCATIONS AND ELEVATIONS OF PIPING BEFORE STARTING WORK. SHOULD A DISCREPANCY APPEAR IN THE CONTRACT DOCUMENTS, OR BETWEEN THE CONTRACT DOCUMENTS AND EXISTING CONDITIONS, NOTIFY THE ARCHITECT AT ONCE FOR INSTRUCTION ON HOW TO PROCEED.
4. THE MECHANICAL CONTRACTOR SHALL ACQUIRE AND PAY FOR ALL PERMITS AND FEES.
5. COORDINATE MECHANICAL WORK WITH ALL OTHER TRADES (ELECTRICAL, ARCHITECTURAL, STRUCTURAL, CIVIL, AND LANDSCAPE). REFER TO ELECTRICAL, ARCHITECTURAL,STRUCTURAL, CIVIL, AND LANDSCAPE DRAWINGS AND SPECIFICATIONS FOR DETAILS. COORDINATION SHALL OCCUR PRIOR TO FABRICATION, PURCHASE, AND/OR INSTALLATION OF ALL WORK.
6. COORDINATE MECHANICAL, ELECTRICAL, PLUMBING, AND FIRE PROTECTION SYSTEM ROUTING PRIOR TO INSTALLATION. DUCTWORK ROUTING TAKES PRECEDENCE OVER OTHER DISCIPLINES INCLUDING FIRE PROTECTION. DRAWINGS ARE DIAGRAMMATIC IN NATURE. PROVIDE ALL FITTINGS, TRANSITIONS AND/OR OFFSETS AS REQUIRED FOR A COMPLETE SYSTEM.
7. PRIOR TO COMMENCING ANY WORK VERIFY ALL EQUIPMENT LOCATIONS WITH THE GENERAL CONTRACTOR, OTHER TRADES, ARCHITECT AND STRUCTURAL ENGINEER.
8. MECHANICAL SYSTEMS SEISMIC RESTRAINTS SHALL CONFORM TO "SEISMIC RESTRAINT MANUAL: GUIDELINES FOR MECHANICAL SYSTEMS" AS PUBLISHED BY SMACNA 3RD EDITION 2008, ANSI/SMACNA 001-2008.
9. THE MECHANICAL CONTRACTOR IS RESPONSIBLE FOR THE SAFE KEEPING OF HIS OWN PROPERTY ON THE JOB SITE. OWNER ASSUMES NO RESPONSIBILITY FOR THE PROTECTION OF PROPERTIES AGAINST, FIRE, SMOKE, THEFT, AND ENVIRONMENTAL CONDITIONS.
10. MECHANICAL MATERIALS, EQUIPMENT, DUCTWORK AND PIPING SHALL BE STORED IN ORDERLY PROFESSIONAL FASHION. ALL ITEMS SHALL BE COVERED AND PROTECTED FROM RAIN AND ALL OTHER ENVIRONMENTAL CONDITIONS.
11. VERIFY AND COORDINATE THE MAINTENANCE ACCESS AND CODE REQUIRED CLEARANCES FOR ALL MECHANICAL EQUIPMENT. INSTALL ALL WORK AND COORDINATE THE WORK OF OTHER TRADES TO MAINTAIN CODE REQUIRED CLEARANCE AND ACCESS FOR PROPER MAINTENANCE OF EQUIPMENT.
12. PROVIDE EQUIPMENT TAGS FOR ALL MECHANICAL EQUIPMENT. TAG SHALL BE MADE OF BAKELITE WITH ETCHED 1/2" HIGH LETTERS. LOCATE TAG ON EQUIPMENT NEAR MANUFACTURERS NAMEPLATE.
13. PROVIDE DUCTWORK THAT CONFORMS TO THE "HVAC DUCT CONSTRUCTION STANDARDS - METAL AND FLEXIBLE" AS PUBLISHED IN THE LATEST EDITION OF THE CALIFORNIA MECHANICAL CODE. ACOUSTICAL LINING SHALL CONFORM TO SMACNA 2006 EDITION (ANSI / SMACNA 006-2006) STANDARDS.
14. FLEXIBLE DUCTWORK SHALL BE USED FOR CONNECTIONS TO AIR TERMINAL DEVICES IN CONCEALED, LOW PRESSURE, ENVIRONMENTAL AIR DUCT SYSTEMS. FLEXIBLE DUCT CONNECTIONS SHALL BE 5'-0" MAXIMUM LENGTH AND SHALL BE INSTALLED IN ACCORDANCE WITH SMACNA HVAC DUCT CONSTRUCTION STANDARDS.
15. REFRIGERANT PIPING SHALL BE SIZED AND ROUTED IN ACCORDANCE WITH MANUFACTURER'S REQUIREMENTS. REFRIGERANT SYSTEM SHALL INCLUDE ALL ADDITIONAL TRAPS, VALVES, AND ACCESSORIES REQUIRED BY THE MANUFACTURER FOR THE INSTALLED PIPE ROUTING. PROVIDE MINIMUM 1" CLOSED CELL FOAM INSULATION FOR ALL REFRIGERANT PIPING, ARMACELL "ARMAFLEX" OR SIMILAR. REFER TO SPECIFICATIONS.
16. THE MECHANICAL CONTRACTOR SHALL PROVIDE ALL CONTROL WIRING IN CONDUIT.
17. THERMOSTATS SHALL BE MOUNTED 48" ABOVE FINISHED FLOOR UNLESS NOTED OTHERWISE.
18. THE MECHANICAL CONTRACTOR SHALL PROVIDE AS-BUILT DRAWINGS. DRAWINGS SHALL BE SUBMITTED IN AUTO CAD FORMAT. AS-BUILT DRAWINGS SHALL BE COMPLETED AND SUBMITTED TO ENGINEER/ARCHITECT PRIOR TO SUBSTANTIAL COMPLETION. ENGINEER WILL NOT PERFORM PUNCH LIST UNTIL AS-BUILT DRAWINGS ARE RECEIVED.
19. PROVIDE COMPLETE AIR AND WATER BALANCE FOR ALL MECHANICAL SYSTEMS. BALANCING CONTRACTOR SHALL BE AN INDEPENDENT THIRD PARTY AND A MEMBER OF "AABC" OR THE "NEBB". MECHANICAL CONTRACTOR SHALL PROVIDE ALL NECESSARY BELTS SHEAVES AND PULLEYS AS REQUIRED BY THE BALANCING CONTRACTOR TO COMPLETE THE BALANCING OF THE SYSTEM.
20. DUCT SIZES INDICATED ON PLANS ARE THE "FREE" INSIDE DIMENSION OF THE DUCT. THE CONTRACTOR SHALL INCREASE THE SIZE OF THE DUCT TO ACCOMMODATE ACOUSTICAL AND / OR PERFORATED LINERS.
21. SEAL ALL DUCT SYSTEMS AIRTIGHT USING MASTIC AND/OR LIQUID ELASTIC SEALANT. "DUCT TAPE" SHALL NOT BE USED.
22. PROVIDE VOLUME DAMPERS FOR EACH SUPPLY DIFFUSER AS WELL AS FOR RETURN AND EXHAUST OPENINGS AS REQUIRED BY THE BALANCING CONTRACTOR TO BALANCE THE SYSTEM. LOCATE DAMPER AS FAR UPSTREAM AS POSSIBLE. FOR ALL VOLUME DAMPERS LOCATED ABOVE CEILINGS PROVIDE 12" LONG 1/2" WIDE FLUORESCENT ORANGE TAPE TO MARK DAMPER LOCATIONS.
23. PROVIDE "PETE'S PLUG" TYPE TEST WELLS BEFORE AND AFTER EACH EACH PIECE OF EQUIPMENT REQUIRING BALANCING OR MONITORING IN THE HYDRONIC SYSTEMS INCLUDING BUT NOT LIMITED TO COILS, HEAT EXCHANGERS, CONTROL VALVES, TEMPERATURE AND / OR PRESSURE SENSORS, ETC. PROVIDE ADDITIONAL TEST WELLS AS REQUIRED BY THE COMMISSIONING AGENT.
24. DUCT SYSTEMS USED WITH BLOWER TYPE EQUIPMENT WHICH ARE PORTIONS OF HEATING COOLING, ABSORPTION, EVAPORATIVE COOLING OR OUTDOOR AIR VENTILATION SYSTEM SHALL BE SIZED IN ACCORDANCE WITH CHAPTER 17 OF THE CALIFORNIA MECHANICAL CODE.
25. AIR-MOVING SYSTEMS SUPPLYING AIR IN EXCESS OF 2000 CFM SHALL BE INTERLOCKED TO AND SHUTDOWN BY AREA WIDE FIRE ALARM SYSTEM SIGNAL. FOR BUILDINGS WITHOUT AREA WIDE SYSTEM THE EQUIPMENT SHALL BE EQUIPPED WITH AN AUTOMATIC SHUTOFF ACTIVATED BY SMOKE DETECTOR LOCATED IN THE MAIN SUPPLY-AIR DUCT.
26. PROVIDE TURNING VANES IN ALL 90° MITERED ELBOWS
27. DUCT SYSTEMS SHALL BE SEALED TO A LEAKAGE RATE NOT TO EXCEED 6% OF THE NOMINAL AIR HANDLER AIRFLOW RATE. CONFIRM THROUGH FIELD VERIFICATION AND DIAGNOSTIC TESTING.
28. ALL MECHANICAL EQUIPMENT SHALL BE INSTALLED WITH ADEQUATE CLEARANCE FOR MAINTENANCE ACCESS, PER MANUFACTURER'S REQUIREMENTS.

CALGREEN BUILDING STANDARDS NON-RESIDENTIAL MANDATORY MEASURES

■	5.201.1	COMPLY WITH REQUIREMENTS OF CALIFORNIA ENERGY CODE (CCR TITLE-24, PART 6, 2019)
■	5.410.3	PERFORM TESTING AND ADJUSTING PROCEDURES IN ACCORDANCE WITH INDUSTRY BEST PRACTICES AND APPLICABLE NATIONAL STANDARDS ON EACH SYSTEM.
■	5.410.4	TESTING AND ADJUSTING OF SYSTEMS SHALL BE REQUIRED FOR BUILDINGS LESS THAN 10,000 SQFT OR NEW SYSTEMS TO SERVE AN ADDITION OR ALTERATION.
■	5.410.4.3.1	BEFORE A NEW SPACE-CONDITIONING SYSTEM SERVING A BUILDING OR SPACE IS OPERATED FOR NORMAL USE, THE SYSTEM SHALL BE BALANCED IN ACCORDANCE WITH THE PROCEDURES DEFINED BY THE TESTING, ADJUSTING, AND BALANCING BUREAU NATIONAL STANDARDS; THE NATIONAL ENVIRONMENTAL BALANCING BUREAU PROCEDURAL STANDARDS; OR ASSOCIATED AIR BALANCE COUNCIL NATIONAL STANDARDS.
■	5.410.4.4	AFTER COMPLETION OF TESTING, ADJUSTING AND BALANCING, PROVIDE A FINAL REPORT OF TESTING SIGNED BY THE INDIVIDUAL RESPONSIBLE FOR PERFORMING THESE SERVICES.
■	5.410.4.5	BUILDING OWNER SHALL BE PROVIDED WITH DETAILED OPERATING AND MAINTENANCE INSTRUCTIONS AND COPIES OF GUARANTEES AND WARRANTIES FOR EACH SYSTEM PRIOR TO FINAL INSPECTION.
■	5.504.4.1	ADHESIVES, ADHESIVE BONDING PRIMERS, ADHESIVE PRIMERS, SEALANTS, SEALANT PRIMERS AND CAULKS SHALL COMPLY WITH LOCAL OR REGIONAL AIR POLLUTION CONTROL OR AIR QUALITY MANAGEMENT DISTRICT RULES WHERE APPLICABLE OR SCAQMD RULE 1168 VOC LIMITS, AS SHOWN IN TABLES 5.504.4.1 & 5.504.4.2. AEROSOL ADHESIVES AND SMALLER UNIT SIZES OF ADHESIVES AND SEALANT OR CAULKING COMPOUNDS (IN UNITS OF PRODUCT, LESS PACKAGING, WHICH DO NOT WEIGH MORE THAN ONE POUND AND DO NOT CONSIST OF MORE THAN 16 FLUID OUNCES) SHALL COMPLY WITH STATEWIDE VOC STANDARDS AND OTHER REQUIREMENTS, INCLUDING PROHIBITIONS ON USE OF CERTAIN TOXIC COMPOUNDS, OF CALIFORNIA CODE OF REGULATIONS, TITLE 17, COMMENCING WITH SECTION 94507.
■	5.504.3	AT THE TIME OF ROUGH INSTALLATION AND DURING STORAGE ON THE CONSTRUCTION SITE UNTIL FINAL STARTUP OF THE HEATING, COOLING, AND VENTILATION EQUIPMENT, ALL DUCT AND OTHER AIR DISTRIBUTION COMPONENT OPENINGS SHALL BE COVERED WITH TAPE, PLASTIC, SHEETMETAL, OR OTHER METHODS ACCEPTABLE TO THE ENFORCING AGENCY TO REDUCE THE AMOUNT OF DUST, WATER, AND DEBRIS WHICH MAY ENTER THE SYSTEM.
■	5.504.5.3	IN MECHANICALLY VENTILATED BUILDINGS, PROVIDE REGULARLY OCCUPIED AREAS OF THE BUILDINGS WITH AIR FILTRATION MEDIA FOR OUTSIDE AND RETURN AIR THAT PROVIDES AT LEAST A MERV 13. MERV 13 FILTERS SHALL BE INSTALLED PRIOR TO OCCUPANCY AND RECOMMENDATIONS FOR MAINTENANCE WITH FILTERS OF THE SAME VALUE SHALL BE INCLUDED IN THE M&O MANUAL.
■	5.504.5.3.1	INSTALLED FILTERS SHALL BE CLEARLY LABELED BY THE MANUFACTURER INDICATING THE MERV RATING.
■	5.506.1	FOR MECHANICALLY OR NATURALLY VENTILATED SPACES IN BUILDINGS, MEET THE MINIMUM REQUIREMENTS OF SECTION 120.1 OF THE CALIFORNIA ENERGY CODE, CCR TITLE 24, PART 6 AND CHAPTER 4 OF CCR, TITLE 8 OR THE APPLICABLE LOCAL CODE WHICHEVER IS MORE STRINGENT.
■	5.506.2	FOR BUILDINGS EQUIPPED WITH DEMAND CONTROL VENTILATION, CO2 SENSORS AND VENTILATION CONTROLS SHALL BE SPECIFIED AND INSTALLED IN ACCORDANCE WITH THE REQUIREMENTS OF THE LATEST EDITION OF THE CALIFORNIA ENERGY CODE, CCR, TITLE 24, PART 6, SECTION 120.1(c).1.
■	702.1	HVAC SYSTEM INSTALLERS SHALL BE TRAINED AND CERTIFIED IN THE PROPER INSTALLATION OF HVAC SYSTEMS INCLUDING DUCTS AND EQUIPMENT BY A NATIONALLY OR REGIONALLY RECOGNIZED TRAINING OR CERTIFICATION PROGRAM. UNCERTIFIED PERSONS MAY PERFORM HVAC INSTALLATIONS WHEN UNDER THE DIRECT SUPERVISION AND RESPONSIBILITY OF A PERSON TRAINED AND CERTIFIED TO INSTALL HVAC SYSTEMS OR CONTRACTOR LICENSED TO INSTALL HVAC SYSTEMS. ACCEPTABLE HVAC TRAINING AND CERTIFICATION PROGRAMS INCLUDE BUT ARE NOT LIMITED TO THE FOLLOWING: 1) STATE CERTIFIED APPRENTICESHIP PROGRAMS, 2) PUBLIC UTILITY TRAINING PROGRAMS, 3) TRAINING PROGRAMS SPONSORED BY TRADE, LABOR, OR STATEWIDE ENERGY CONSULTING OR VERIFICATION ORGANIZATIONS, 4) PROGRAMS SPONSORED BY MANUFACTURING ORGANIZATIONS, 5) OTHER PROGRAMS ACCEPTABLE TO THE ENFORCING AGENCY.
■	702.2	SPECIAL INSPECTORS MUST BE QUALIFIED AND ABLE TO DEMONSTRATE COMPETENCE IN THE DISCIPLINE THEY ARE INSPECTING.
■	703.1	THE BUILDING OWNER SHALL BE PROVIDED WITH THE FINAL REPORT OF ALL INSPECTION VERIFICATIONS AND REPORTS REQUIRED BY THE ENFORCING AGENCY.

APPLICABLE CODES

BUILDING CODES: (APPLICABLE AS OF JANUARY 1, 2020)

2019 CALIFORNIA BUILDING STANDARDS ADMINISTRATIVE CODE, PART 1, TITLE 24 C.C.R.

2019 CALIFORNIA BUILDING CODE (CBC), PART 2, TITLE 24 C.C.R.; (2018 INTERNATIONAL BUILDING CODE OF THE INTERNATIONAL CODE COUNCIL, WITH CALIFORNIA AMENDMENTS)

2019 CALIFORNIA ELECTRICAL CODE (CEC), PART 3, TITLE 24 C.C.R.; (2017 NATIONAL ELECTRICAL CODE OF THE NATIONAL FIRE PROTECTION ASSOCIATION, NFPA)

2019 CALIFORNIA MECHANICAL CODE (CMC), PART 4, TITLE 24 C.C.R.; (2018 UNIFORM MECHANICAL CODE OF THE INTERNATIONAL ASSOCIATION OF PLUMBING AND MECHANICAL OFFICIALS, IAPMO)

2019 CALIFORNIA PLUMBING CODE (CPC), PART 5, TITLE 24 C.C.R.; (2018 UNIFORM PLUMBING CODE OF THE INTERNATIONAL ASSOCIATION OF PLUMBING AND MECHANICAL OFFICIALS, IAPMO)

2019 ENERGY CODE (CEC), PART 6, TITLE 24 C.C.R.;

2019 CALIFORNIA FIRE CODE, PART 9, TITLE 24 C.C.R.; (2018 INTERNATIONAL FIRE CODE OF THE INTERNATIONAL CODE COUNCIL)

2019 CALIFORNIA GREEN BUILDING CODE (CAL GREEN), PART 11, TITLE 24 C.C.R.

2019 CALIFORNIA REFERENCED STANDARDS, PART 12, TITLE 24 C.C.R.

2019 TITLE 19 C.C.R., PUBLIC SAFETY, STATE FIRE MARSHAL REGULATIONS.

PARTIAL LIST OF APPLICABLE STANDARDS

ASHRAE 62.1	VENTILATION FOR ACCEPTABLE INDOOR AIR QUALITY	VERSION 2019
ASHRAE 55	THERMAL COMFORT FOR HUMAN OCCUPANCY	VERSION 2017
ASHRAE G36	HIGH PERFORMANCE SEQUENCE OF OPERATIONS FOR HVAC SYSTEMS	VERSION 2018

2019 CALIFORNIA BUILDING CODE (FOR SFM) REFERENCED STANDARDS CH. 35

NFPA 13	AUTOMATIC SPRINKLER SYSTEMS (CALIFORNIA AMENDED)	2019 EDITION
NFPA 14	STANDPIPE SYSTEMS (CALIFORNIA AMENDED)	2019 EDITION
NFPA 17	DRY CHEMICAL EXTINGUISHING SYSTEMS	2017 EDITION
NFPA 17A	WET CHEMICAL EXTINGUISHING SYSTEMS	2017 EDITION
NFPA 20	STATIONARY PUMPS	2019 EDITION
NFPA 24	PRIVATE FIRE SERVICE MAINS (CALIFORNIA AMENDED)	2019 EDITION
NFPA 72	NATIONAL FIRE ALARM AND SIGNALING CODE (CALIFORNIA AMENDED) (NOTE: SEE UL STANDARD 1971 FOR "VISUAL DEVICES")	2019 EDITION
NFPA 80	FIRE DOOR AND OTHER OPENING PROTECTIVES	2019 EDITION
NFPA 253	CRITICAL RADIANT FLUX OF FLOOR COVERING SYSTEMS	2019 EDITION
NFPA 2001	CLEAN AGENT FIRE EXTINGUISHING SYSTEMS (CALIFORNIA AMENDED)	2018 EDITION

TITLE-24 MECHANICAL MANDATORY MEASURES

GENERAL

■	110.1	ANY APPLIANCE FOR WHICH THERE IS A CALIFORNIA STANDARD ESTABLISHED IN THE APPLIANCE EFFICIENCY REGULATIONS SHALL COMPLY WITH THE APPLIANCE STANDARD.
☐	120.6	COVERED PROCESS REFRIGERATED WAREHOUSES, COMMERCIAL REFRIGERATION, ENCLOSED PARKING GARAGES, PROCESS BOILERS, AND COMPRESSED AIR SYSTEMS SHALL MEET THE REQUIREMENTS WITHIN THIS SECTION.
☐	120.8	BUILDING COMMISSIONING PROCEDURES, REVIEWS, AND REPORTS SHALL BE FOLLOWED AS DESCRIBED WITHIN THIS SECTION.

AIR-SIDE SYSTEMS

■	110.2(a)	HEATING AND COOLING EQUIPMENT EFFICIENCY ANY SPACE-CONDITIONING EQUIPMENT SHALL BE INSTALLED ONLY IF THE MANUFACTURER HAS CERTIFIED THAT THE EQUIPMENT COMPLIES WITH ALL THE APPLICABLE REQUIREMENTS OF THE CALIFORNIA BUILDING ENERGY EFFICIENCY STANDARDS.
■	110.2(b)	HEAT PUMP CONTROLS HEAT PUMPS WITH SUPPLEMENTARY ELECTRIC RESISTANCE HEATERS SHALL HAVE CONTROLS: 1. THAT PREVENT SUPPLEMENTARY HEATER OPERATION WHEN THE HEATING LOAD CAN BE MET BY THE HEAT PUMP ALONE; AND 2. IN WHICH THE CUT-ON TEMPERATURE FOR COMPRESSION HEATING IS HIGHER THAN THE CUT-ON TEMPERATURE FOR SUPPLEMENTARY HEATING, AND THE CUT-OFF TEMPERATURE FOR COMPRESSION HEATING IS HIGHER THAN THE CUT-OFF TEMPERATURE FOR SUPPLEMENTARY HEATING.
■	110.2(c)	THERMOSTATS ALL UNITARY HEATING OR COOLING SYSTEMS, INCLUDING HEAT PUMPS, NOT CONTROLLED BY A CENTRAL ENERGY MANAGEMENT SYSTEM SHALL HAVE A SETBACK THERMOSTAT.
☐	110.2(d)	FURNACE CONTROLS GAS-FIRED AND OIL-FIRED FORCED AIR FURNACES WITH INPUT RATINGS 225,000 BTU/H SHALL NOT HAVE A PILOT LIGHT, AND SHALL HAVE EITHER POWER VENTING OR A FLUE DAMPER.
☐	120.1(b.1)	NATURAL VENTILATION NATURALLY VENTILATED SPACES SHALL BE PERMANENTLY OPEN TO AND WITHIN 20 FEET OF OPERABLE WALL OR ROOF OPENINGS TO THE OUTDOORS; THE OPENABLE AREA OF WHICH IS NOT LESS THAN 5% OF THE CONDITIONED FLOOR AREA OF THE NATURALLY VENTILATED SPACE. WHERE OPENINGS ARE COVERED WITH LOUVERS OR OTHERWISE OBSTRUCTED, OPENABLE AREA SHALL BE BASED ON THE FREE UNOBSTRUCTED AREA THROUGH THE OPENING. THE MEANS TO OPEN REQUIRED OPERABLE OPENINGS SHALL BE READILY ACCESSIBLE TO BUILDING OCCUPANTS WHENEVER THE SPACE IS OCCUPIED.
■	120.1(c.1)	MINIMUM VENTILATION EACH SPACE THAT IS NOT NATURALLY VENTILATED SHALL BE VENTILATED WITH A MECHANICAL SYSTEM CAPABLE OF PROVIDING AN OUTDOOR AIR RATE NO LESS THAN AS REQUIRED BY THE CALIFORNIA ENERGY EFFICIENCY STANDARDS.
■	120.1(c.2)	TIME CONTROL THE MINIMUM RATE OF OUTDOOR AIR OR THREE COMPLETE AIR CHANGES SHALL BE SUPPLIED TO THE ENTIRE BUILDING DURING THE ONE-HOUR PERIOD IMMEDIATELY BEFORE THE BUILDING IS NORMALLY OCCUPIED.
☐	120.1(c.3)	DEMAND CONTROL VENTILATION HVAC SINGLE ZONE SYSTEMS WITH AN OUTDOOR AIR ECONOMIZER AND WITH A DESIGN OCCUPANT DENSITY, OR A MAXIMUM OCCUPANT LOAD FACTOR FOR EGRESS PURPOSES GREATER THAN OR EQUAL TO 25 PEOPLE PER 1000 SF SHALL HAVE DEMAND CONTROL VENTILATION OR OCCUPANT SENSOR VENTILATION CONTROLS.
■	120.2(e.1)	TIME CONTROL EACH SPACE-CONDITIONING SYSTEM SHALL BE INSTALLED WITH CONTROLS THAT ARE CAPABLE OF AUTOMATICALLY SHUTTING OFF THE SYSTEM DURING PERIODS OF NON-USE AND SHALL HAVE EITHER AN AUTOMATIC TIME SWITCH CONTROL DEVICE WITH AN ACCESSIBLE MANUAL OVERRIDE THAT ALLOWS OPERATION OF THE SYSTEM FOR UP TO FOUR HOURS; OR AN OCCUPANCY SENSOR; OR A FOUR-HOUR TIMER THAT CAN BE MANUALLY OPERATED.
■	120.2(e.2)	SETBACK AND SETUP CONTROL THE CONTROL SHALL AUTOMATICALLY RESTART AND TEMPORARILY OPERATE THE SYSTEM AS REQUIRED TO MAINTAIN A SETBACK HEATING THERMOSTAT SETPOINT. IF THE SYSTEM PROVIDES MECHANICAL HEATING AND A SETUP COOLING THERMOSTAT SETPOINT IF THE SYSTEM PROVIDES MECHANICAL COOLING.
■	120.2(f)	OUTDOOR DAMPER CONTROL OUTDOOR AIR SUPPLY AND EXHAUST EQUIPMENT SHALL BE INSTALLED WITH DAMPERS THAT AUTOMATICALLY CLOSE UPON FAN SHUTDOWN.
☐	120.2(g)	ISOLATION ZONES EACH SPACE-CONDITIONING SYSTEM SERVING MULTIPLE ZONES WITH A COMBINED CONDITIONED FLOOR AREA OF MORE THAN 25,000 SQUARE FEET SHALL BE DESIGNED, INSTALLED, AND CONTROLLED TO SERVE ISOLATION AREAS.
☐	120.2(h)	AUTOMATIC DEMAND SHED CONTROLS HVAC SYSTEMS WITH DDC TO ZONE LEVEL SHALL BE PROGRAMMED TO ALLOW CENTRALIZED DEMAND SHED FOR NON-CRITICAL ZONES.
☐	120.2(i)	ECONOMIZER FAULT DETECTION AND DIAGNOSTICS (FDD) AIR-COOLED UNITARY DIRECT-EXPANSION UNITS EQUIPPED WITH AN ECONOMIZER AND MECHANICAL COOLING AT AHRI CONDITIONS OF GREATER THAN OR EQUAL TO 54.0 MBH SHALL INCLUDE A FDD SYSTEM.
■	120.4	DUCT INSULATION ALL AIR DISTRIBUTION SYSTEM DUCTS AND PLENUMS SHALL BE INSTALLED, SEALED AND INSULATED TO MEET THE REQUIREMENTS OF THE 2019 CMC SECTIONS 601, 602, 603, 604, 605.

WATER-SIDE SYSTEMS

☐	110.2(a)	EQUIPMENT EFFICIENCY HEATING AND COOLING EQUIPMENT EFFICIENCY ANY SPACE-CONDITIONING EQUIPMENT SHALL BE INSTALLED ONLY IF THE MANUFACTURER HAS CERTIFIED THAT THE EQUIPMENT COMPLIES WITH ALL THE APPLICABLE REQUIREMENTS OF THE CALIFORNIA BUILDING ENERGY EFFICIENCY STANDARDS.
■	120.3	PIPE INSULATION ALL HVAC PIPING, EXCEPT FOR THAT CONVEYING LIQUIDS BETWEEN 40°F AND 350°F OR LOCATED WITHIN HVAC EQUIPMENT, SHALL BE INSULATED IN ACCORDANCE WITHIN THIS SECTION.

SERVICE HOT WATER SYSTEMS

☐	110.3(a) 110.3(b)	WATER HEATER CERTIFICATION ANY SERVICE WATER-HEATING SYSTEM OR EQUIPMENT MAY BE INSTALLED ONLY IF THE MANUFACTURER HAS CERTIFIED THAT THE SYSTEM OR EQUIPMENT COMPLIES WITH ALL OF THE REQUIREMENTS OF THE CALIFORNIA BUILDING ENERGY EFFICIENCY STANDARDS.
☐	110.3(c)	SERVICE WATER HEATING INSTALLATION ON SYSTEMS THAT HAVE A TOTAL CAPACITY GREATER THAN 167,000 BTU/HR. OUTLETS THAT REQUIRE HIGHER SERVICE WATER TEMPERATURES SHALL HAVE SEPARATE REMOTE HEATERS, HEAT EXCHANGERS, OR BOOSTERS. CIRCULATING SERVICE WATER-HEATING SYSTEMS SHALL HAVE A CONTROL CAPABLE OF AUTOMATICALLY TURNING OFF THE CIRCULATING PUMP WHEN HOT WATER IS NOT REQUIRED. CONTROLS SHALL LIMIT THE OUTLET TEMPERATURE TO 110°F FOR PUBLIC LAVATORIES.
☐	110.4(a)	POOL AND SPA EFFICIENCY AND CONTROL A READILY ACCESSIBLE ON-OFF SWITCH, MOUNTED ON THE OUTSIDE OF THE HEATER THAT ALLOWS SHUTTING OFF THE HEATER WITHOUT ADJUSTING THE THERMOSTAT SETTING; A PERMANENT, EASILY READABLE, AND WEATHERPROOF PLATE OR CARD THAT GIVES INSTRUCTION FOR THE ENERGY EFFICIENT OPERATION OF THE POOL OR SPA AND FOR THE PROPER CARE OF POOL OR SPA WATER WHEN A COVER IS USED. NO ELECTRIC RESISTANCE HEATING.
☐	110.4(b)	POOL AND SPA INSTALLATION ANY POOL OR SPA HEATING SYSTEM OR EQUIPMENT SHALL BE INSTALLED WITH ALL OF THE FOLLOWING: AT LEAST 36 INCHES OF PIPE BETWEEN THE FILTER AND THE HEATER TO ALLOW FOR THE FUTURE ADDITION OF SOLAR HEATING EQUIPMENT; A COVER FOR OUTDOOR POOLS OR OUTDOOR SPAS; THE POOL SHALL HAVE DIRECTIONAL INLETS THAT ADEQUATELY MIX THE POOL WATER; THE CIRCULATION PUMP SHALL HAVE A TIME SWITCH THAT ALLOWS THE PUMP TO BE SET TO RUN IN THE OFF-PEAK ELECTRIC DEMAND PERIOD.
☐	110.5(c)	POOL HEATERS SHALL NOT HAVE A PILOT LIGHT.
☐	110.5(d)	SPA HEATERS SHALL NOT HAVE A PILOT LIGHT.

IDENTIFICATION STAMP
DIV. OF THE STATE ARCHITECT
APP: 02-119490 INC:
REVIEWED FOR
SS ☑ FLS ☑ ACS ☑
DATE: 09/13/2022

LPA
ARCHITECTURE ENGINEERING INTERIORS LANDSCAPE ARCHITECTURE PLANNING
916-287-2400 Office
916-287-2401 Fax
LPADesignStudios.com
431 I Street,
Suite 107
Sacramento, California 95814

REGISTERED PROFESSIONAL ENGINEER
CHRISTOPHER D. TINDALL
M32973
12/31/2022
MECHANICAL
STATE OF CALIFORNIA

This document and all other project documents, ideas, aesthetics and designs incorporated therein are instruments of service. All project documents are copyright protected, are the property of LPA, Inc. (LPA) and cannot be lawfully used in whole or in part for any project or purpose except as set forth in the contractual agreement between LPA and its Client. The unauthorized disclosure and/or use of the project documents (including the creation of derivative works), may give rise to liability for copyright infringement, unlawful disclosure, use or misappropriation of property rights held by LPA. The unauthorized use of the project documents will give rise to the recovery of monetary losses and damages including attorney fees and costs for which the unauthorized user will be held liable. Project documents describe the design intent of the work and are not a representation of as-built or existing conditions. LPA is not responsible for any discrepancies between the project documents and the existing conditions.

© LPA, Inc.

DAVIS SR HIGH SCHOOL
AQUATICS CENTER
315 W 14TH ST., DAVIS, CA 95616

Developed for
DAVIS JOINT UNIFIED SCHOOL DISTRICT

Revision	Date

Submittal	Date
50% DD REVIEW	06/15/2021
100% DD SUBMITTAL	07/26/2021
50% CD REVIEW	10/08/2021
100% CD DSA SUBMITTAL	10/22/2021
DSA SUBMITTAL	03/24/2022

Job Number	1904413
Date Published	03/24/2022
Checked By	LPA
Scale	

MECHANICAL LEGENDS AND GENERAL NOTES

M0.10

23 - SPLIT SYSTEM INDOOR UNIT SCHEDULE

ML	UNIT MFR	UNIT MODEL NO.	SERVICE/LOCATION	AIRFLOW (CFM)	MIN. OSA (CFM)	COOLING CAPACITY (MBH)	COOLING EER	HEATING CAPACITY (MBH)	HEATING HSPF	REFRIGERANT TYPE	POWERED FROM OUTDOOR	UNIT SIZE (L"xW"xH")	OPERATING WEIGHT (LBS.)	INSTALL DETAIL NO.	CONTROLS DETAIL NO.	SPECIFICATION SECTION	REMARKS
FC-1	LG ELECTRONICS	LSN240HFV3	1004 ELECTRICAL	510	-	22.0	10	-	-	R-410A	YES	40x9x14	40	04 / M7.20	03 / M6.10	238127	1, 2, 3, 4, 5
FC-2	LG ELECTRONICS	LCN188HV4	1006 OFFICE	460	50	18.0	12.5	18.5	10	R-410A	YES	23x23x12	50	12 / M7.20	03 / M6.10	238127	1, 2, 3, 4, 5, 6
FC-3	LG ELECTRONICS	LSN363HLV3	1018 IDF	800	-	33.0	10	-	-	R-410A	YES	43x18x14	40	04 / M7.20	03 / M6.10	238127	1, 2, 3, 4, 5

REMARKS:
1. MOUNTING: PROVIDE WALL MOUNTED UNITS WITH UNIT BACKING PLATE. ALL OTHER FCUS SHALL BE CEILING MOUNTED VIA DETAILS INDICATED.
2. POWER: FCU SHALL BE ENERGIZED BY OUTDOOR UNIT.
3. CONTROLS: FCU SHALL BE INTEGRATED TO DELTA CONTROLS BMS CONTROL SYSTEM. FCU SHALL ALARM AND SHUT OFF BASED UPON CONDENSATE PUMP FAILURE ON BOTH WALL MOUNTED AND CEILING HUNG UNITS. ALL UNITS SHALL BE SCHEDULED, MONITORED AND CONTROLED BY DELTA CONTROLS.
4. THERMOSTAT: PROVIDE CONCEALED WIRED REMOTE CONTOLLER.
5. CONDENSATE: PROVIDE INLINE CONDENSATE PUMP WITH 120V POWER FROM FCU. CONDENSATE PUMP PUMP SHALL BE GOBI-II MODEL. FOR PIPE ROUTING SEE PLUMBING PLANS.
6. FILTER: PROVIDE CUSTOM FILTER RACK TO SUPPORT MINIMUM MERV 13.

23 - SPLIT SYSTEM OUTDOOR UNIT SCHEDULE

TAG	UNIT MFR	UNIT MODEL	SERVICE	LOCATION	NOMINAL CAPACITY (TONS)	AMBIENT (F)	COOLING CAPACITY (MBH)	HEATING CAPACITY (MBH)	HEATING HSPF	REFRIGERANT TYPE	ELECTRICAL VOLTAGE	ELECTRICAL PHASE	ELECTRICAL MCA	ELECTRICAL MOP	UNIT SIZE (L"xW"xH")	OPERATING WEIGHT (LBS.)	INSTALL DETAIL NO.	SPECIFICATION SECTION	REMARKS
HP-1	LG ELECTRONICS	LSU363HLV3	FC-1	POOL MECHANICAL ROOF	2.0	100	22.0	-	-	R-410A	208 V	1	15 A	20 A	15x38x26	140	03 / M7.20	238126	1, 2, 3, 4
HP-2	LG ELECTRONICS	LUU189HV	FC-2	POOL MECHANICAL ROOF	1.5	100	18.0	18.5	10	R-410A	208 V	1	20 A	30 A	15x38x33	140	03 / M7.20	238126	1, 2, 3, 4
HP-3	LG ELECTRONICS	LSU363HLV3	FC-3	POOL RESTROOM ROOF	2.75	100	33.0	-	-	R-410A	208 V	1	15 A	20 A	15x38x33	150	03 / M7.20	238126	1, 2, 3, 4

REMARKS:
1. MOUNTING: CONDENSING UNITS SHALL BE MOUNTED AND ANCHORED TO BUILT UP PLATOFRM PER MECHANICAL DETAILS.
2. POWER: PROVIDE NEMA 3R DISCONNECTS FOR ALL OUTDOOR UNITS. CONDENSING UNITS SHALL PROVIDE POWER TO DEDICATED INDOOR FCU AND CONDENSATE PUMPS.
3. CONTROLS: FCU SHALL BE INTEGRATED TO DELTA CONTROLS BMS CONTROL SYSTEM. SEE CONTROLS RISER & DETAILS FOR FURTHER INFORMATION. ALL UNITS SHALL BE SCHEDULED, MONITORED AND CONTROLED BY DELTA CONTROLS.
4. REFRIGERANT: CONTRACTOR TO VERIFY ALL REFRIGERANT PIPE SIZES, LINE LENGTHS, ROUTING, FILTERS, Y-STRAINERS, SHUT OFF VALES & ACCESSORIES WITH MANUFACTURER.

23 - FAN (EXHAUST) SCHEDULE

TAG	UNIT MFR	UNIT MODEL	SERVICE	LOCATION	TYPE	AIRFLOW (CFM)	FAN RPM	EXT STATIC PRESSURE (IN-WG)	MOTOR DATA HP (WATT)	MOTOR DATA RPM	SOUND POWER (SONES / dBA)	ELECTRICAL VOLTAGE	ELECTRICAL PHASE	ELECTRICAL FLA	UNIT SIZE (L"xW"xH")	OPERATING WEIGHT (LBS.)	INSTALL DETAIL NO.	CONTROLS DETAIL NO.	SPECIFICATION SECTION	REMARKS
EF-1	COOK	120FRH8D	1002 CHEM STORAGE	POOL MECHANICAL ROOF	UPBLAST	220	750	0.25	0.02	860	2.2 / 38	208 V	3	-	30x30x33	190	11 / M7.20	14 / M6.10	233423	1, 2, 3, 4, 5
EF-2	COOK	120FRH8D	1003 CHEM STORAGE	POOL MECHANICAL ROOF	UPBLAST	220	750	0.25	0.02	860	2.2 / 38	208 V	3	-	30x30x33	190	11 / M7.20	14 / M6.10	233423	1, 2, 3, 4, 5
EF-3	COOK	180FR11D	1001 ROOM MECHANICAL	POOL MECHANICAL ROOF	UPBLAST	3,500	1,274	0.50	3/4	1,140	17.0 / 71	208 V	3	3.5 A	40x40x43	300	11 / M7.20	13 / M6.10	233423	1, 2, 3, 4, 5
EF-4	COOK	120R17DEC	1005 STORAGE	POOL MECHANICAL ROOF	UPBLAST	560	878	0.30	1/2	1725	3.8 / 44	115 V	1	-	30x30x29	80	11 / M7.20	15 / M6.10	233423	1, 2, 3, 4, 6
EF-5	COOK	165R17D (VF)	1014 & 1015 BOYS RESTROOM/CHANGING RM	POOL RESTROOM ROOF	UPBLAST	1,300	809	0.50	1/4	1,725	6.8 / 52	115 V	1	3.2 A	35x35x31	110	11 / M7.20	16 / M6.10	233423	1, 2, 3, 4, 6
EF-6	COOK	135R17D (VF)	1012 & 1013 GIRLS RESTROOM/CHANGING RM	POOL RESTROOM ROOF	UPBLAST	800	969	0.50	1/8	1,725	6.3 / 51	115 V	1	1.9 A	30x30x29	80	11 / M7.20	16 / M6.10	233423	1, 2, 3, 4, 6
EF-7	COOK	150RH17DEC	1007-1009 & 1016-1017 FAMILY RM	POOL RESTROOM ROOF	UPBLAST	500	953	0.50	1/2	1,725	4.7 / 48	115 V	1	-	26x26x39	180	11 / M7.20	16 / M6.10	233423	1, 2, 3, 4, 6
EF-8	COOK	GCVF-700	1010 CUSTODIAL	1010 CUSTODIAL	CEILING	100	829	0.25	(9)	-	1.2 / 36	115 V	1	4.4	23x14x12	55	12 / M7.20	15 / M6.10	233423	3, 4, 6
EF-9	COOK	GCVF-700	1011 STORAGE	1011 STORAGE	CEILING	100	829	0.25	(9)	-	1.2 / 36	115 V	1	4.4	23x14x12	55	12 / M7.20	15 / M6.10	233423	3, 4, 6

REMARKS:
1. MOUNTING: PROVIDE PITCHED/SLOPED ALUMINUM ROOF CURB WITH INTEGRAL SUB-BASE, BURGLAR BARS & WIRE MESH SCREEN. CONTRACTOR TO FIELD VERIFY ROOF CURB HEIGHT TO HAVE MINIMUM 8" FROM TOP OF ROOF TO TOP OF CURB FOR ROOF FLASHING.
2. POWER: PROVIDE NEMA 3R DISCONNECTS FOR ALL OUTDOOR UNITS.
3. CONTROLS: FANS SHALL BE INTEGRATED TO DELTA CONTROLS BMS CONTROL SYSTEM. SEE CONTROLS RISER & DETAILS FOR FURTHER INFORMATION. ALL FANS SHALL BE SCHEDULED, MONITORED AND CONTROLED BY DELTA CONTROLS.
4. ACCESSORIES: PROVIDE BACKDRAFT DAMPER IN SHEET METAL NECK OF ALL EXHAUST FANS BELOW ROOF CONNECTION. PROVIDE BURGLAR BARS WITH ROOF CURB.
5. FANS SHALL BE COMPLETE FIBERGLASS CONSTRUCTION, CORROSION RESISTANT HOUSING & WHEELS.
6. FANS SHALL BE COMPLETE ALUMINIM AND STAINLESS STEEL CONSTRUCTION, CORROSION RESISTANT HOUSING & WHEELS WITH UV EPOXY

AIR TERMINAL SCHEDULE

EQUIPMENT TAG	MFR	MODEL	Count	SERVICE	TYPE	MATERIAL	REMARKS
E-9: 8"ø	KRUEGER	S580	7	3-EXHAUST	SINGLE DEFLECTION GRILLE	ALUMINUM	1, 2
E-9: 10"ø	KRUEGER	S580	5	3-EXHAUST	SINGLE DEFLECTION GRILLE	ALUMINUM	1, 2
E-40: 12"x6"	KRUEGER	S580	2	3-EXHAUST	SIDEWALL SINGLE DEFLECTION GRILLE	ALUMINUM	1, 2
E-40: 14"x12"	KRUEGER	S580	4	3-EXHAUST	SIDEWALL SINGLE DEFLECTION GRILLE	ALUMINUM	1, 2
E-40: 20"x14"	KRUEGER	S580	2	3-EXHAUST	SIDEWALL SINGLE DEFLECTION GRILLE	ALUMINUM	1, 2

REMARKS:
1. CEILING COMPATIBILITY: FURNISH WITH BORDER STYLES COMPATIBLE WITH ADJACENT CEILING SYSTEMS SPECIFICALLY MANUFACTURED TO FIT INTO CEILING MODULE WITH ACCURATE AND ADEQUATE SUPPORT. REFER TO ARCHITECTURAL DRAWINGS AND SPECIFICATIONS FOR TYPES OF CEILING SYSTEMS.
2. PROVIDE RECTANGULAR TO ROUND ADAPTOR AND VICE-VERSA AS REQUIRED.

PIPE INSULATION SCHEDULE		
	INSULATION	JACKET
REFRIGERANT		
ALL SIZES	ELASTOMERIC 2.0" THICK	OUTDOOR - ALUMINUM 0.024 WITH ALUMINUM ELBOWS INDOOR - PVC

PIPE MATERIAL SCHEDULE		
	MATERIAL	CONNECTION
REFRIGERANT		
ALL SIZES	TYPE L COPPER	SOLDER/BRAZED
REMARKS		

IDENTIFICATION STAMP
DIV. OF THE STATE ARCHITECT
APP: 02-119490 INC:
REVIEWED FOR
SS ☑ FLS ☑ ACS ☑
DATE: 09/13/2022

STATE OF CALIFORNIA
Nonresidential Building Commissioning
NRCC-CXR-E — CALIFORNIA ENERGY COMMISSION

CERTIFICATE OF COMPLIANCE		NRCC-CXR-E
Project Name:	Davis Aquatics Center	Report Page: (Page 1 of 6)
Project Address:	315 W 14th	Date Prepared: 5/25/2022

A. GENERAL INFORMATION

01	Project Location (city)	Davis	04	Building Size (ft^2)	256
02	Occupancy Type	Nonresidential	05	Nonresidential Conditioned Floor Area (ft^2)	< 10,000 ft^2
03	Project Type	Newly constructed	06	HVAC System Type	Unitary or packaged equipment each serving one zone

B. PROJECT SCOPE

Based on project information provided in Table A, Table B indicates which commissioning related requirements apply per §120.8; table B is not editable by the user.

Commissioning Requirements per §120.8

01	Table F: Design Review Kickoff	§120.8(d)1 and §120.8(d)2	The design review kickoff meeting establishes who will play the role of the design reviewer, the project schedule and identify owner's requirements. This meeting should be conducted during schematic design.
02	Table G: Owner's Project Requirements (OPR)	§120.8(e)	This requirement does not apply.
03	Table H: Basis of Design (BOD)	§120.8(f)	This requirement does not apply.
04	Table I: Design Review	§120.8(d) and §120.8(e)	The design reviewer(s) reviews the construction documents for clarity, completeness, and adherence to the owner's goals. Commissioning measures must be included in the construction documents to facilitate the design review and commissioning process. For projects with >= 10,000 ft^2 of nonresidential conditioned floor area the design review is for adherence with the Owner's Project Requirements (OPR) and Basis of Design (BOD). This should be conducted during design.
05	Table J: Commissioning Plan	§120.8(f)	This requirement does not apply.
06	Table K: Functional Performance Testing	§120.8(g)	This requirement does not apply.
07	Table L: Documentation and Training	§120.8(h)	This requirement does not apply.
08	Table M: Commissioning Report	§120.8(i)	This requirement does not apply.

STATE OF CALIFORNIA
Nonresidential Building Commissioning
NRCC-CXR-E — CALIFORNIA ENERGY COMMISSION

CERTIFICATE OF COMPLIANCE		NRCC-CXR-E
Project Name:	Davis Aquatics Center	Report Page: (Page 2 of 6)
Project Address:	315 W 14th	Date Prepared: 5/25/2022

C. COMPLIANCE RESULTS

Table C will indicate if the project data input into the compliance document is compliant with commissioning requirements per §120.8. This table is not editable by the user. If any cell on this table says "DOES NOT COMPLY" or "COMPLIES with Exceptional Conditions" refer to Table D. for guidance.

01	02	03	04	05	06	07	08	09
Design Kickoff Review	Owner's Project Requirements	Basis of Design	Design Review	Commissioning Plan	Functional Performance Testing	Documentation and Training	Commissioning Report	Compliance Results
Table F	Table G	Table H	Table I	Table J	Table K	Table L	Table M	
Yes			Yes					COMPLIES
10	Design Reviewer(s) for the project include:							COMPLIES

D. EXCEPTIONAL CONDITIONS

This table is auto-filled with uneditable comments because of selections made or data entered in tables throughout the form.

E. ADDITIONAL REMARKS

This table includes remarks made by the permit applicant to the Authority Having Jurisdiction.

STATE OF CALIFORNIA
Nonresidential Building Commissioning
NRCC-CXR-E — CALIFORNIA ENERGY COMMISSION

CERTIFICATE OF COMPLIANCE		NRCC-CXR-E
Project Name:	Davis Aquatics Center	Report Page: (Page 4 of 6)
Project Address:	315 W 14th	Date Prepared: 5/25/2022

F. DESIGN REVIEW KICKOFF MEETING

15	HVAC System Goals	High Efficiency Split Systems
16	Indoor Lighting System Goals	N/A
17	Outdoor Lighting System Goals	N/A
18	Water Heating System Goals	N/A
19	Equipment and System Specifications	N/A
20	Operations and Maintenance	Refrigerant Replacement & filter changes

G. OWNER'S PROJECT REQUIREMENTS (OPR)

This section does not apply to this project.

H. BASIS OF DESIGN (BOD)

This section does not apply to this project.

I. CONSTRUCTION DOCUMENT DESIGN REVIEW CHECKLIST

This table is only completed if a design review document is not attached to permit application to demonstrate compliance with §120.8(d) and §120.8(e). For buildings with >= 10,000 ft^2 conditioned floor area, the design review will ensure the construction documents meet the Owner's Project Requirements (Table G.) and the Basis of Design Documents (Table H.). For buildings with < 10,000 ft^2 conditioned floor area, the design review will ensure the construction documents meet the goals documented in Table F. during the Design Review Kickoff.

		YES	NO
01	Attaching Completed Design Review Documentation?	●	○

J. COMMISSIONING PLAN

This section does not apply to this project.

K. FUNCTIONAL PERFORMANCE TESTING

This section does not apply to this project.

L. DOCUMENTATION AND TRAINING

This section does not apply to this project.

STATE OF CALIFORNIA
Nonresidential Building Commissioning
NRCC-CXR-E — CALIFORNIA ENERGY COMMISSION

CERTIFICATE OF COMPLIANCE		NRCC-CXR-E
Project Name:	Davis Aquatics Center	Report Page: (Page 3 of 6)
Project Address:	315 W 14th	Date Prepared: 5/25/2022

M. COMMISSIONING REPORT

This section does not apply to this project.

N. DECLARATION OF REQUIRED CERTIFICATES OF INSTALLATION

There are no Certificates of Installation applicable to commissioning requirements.

O. DECLARATION OF REQUIRED CERTIFICATES OF ACCEPTANCE

Although there are no "CXR" Certificates of Acceptance required to document commissioning requirements, Certificates of Acceptance may be used to supplement functional performance testing required by §120.8(g).

STATE OF CALIFORNIA
Nonresidential Building Commissioning
NRCC-CXR-E — CALIFORNIA ENERGY COMMISSION

CERTIFICATE OF COMPLIANCE		NRCC-CXR-E
Project Name:	Davis Aquatics Center	Report Page: (Page 8 of 6)
Project Address:	315 W 14th	Date Prepared: 5/25/2022

DOCUMENTATION AUTHOR'S DECLARATION STATEMENT

I certify that this Certificate of Compliance documentation is accurate and complete.

Documentation Author Name:	Documentation Author Signature:
Company: LPA, Inc	Signature Date: 2022-05-25
Address:	CEA/ HERS Certification Identification (if applicable):
City/State/Zip:	Phone:

RESPONSIBLE PERSON'S DECLARATION STATEMENT

I certify the following under penalty of perjury, under the laws of the State of California:
1. The information provided on this Certificate of Compliance is true and correct.
2. I am eligible under Division 8 of the Business and Professions Code to accept responsibility for the building design or system design identified on this Certificate of Compliance (responsible designer).
3. The energy features and performance specifications, materials, components, and manufactured devices for the building design or system design identified on this Certificate of Compliance conform to the requirements of Title 24, Part 1 and Part 6 of the California Code of Regulations.
4. The building design features or system design features identified on this Certificate of Compliance are consistent with the information provided on other applicable compliance documents, worksheets, calculations, plans and specifications submitted to the enforcement agency for approval with this building permit application.
5. I will ensure that a completed signed copy of this Certificate of Compliance shall be made available with the building permit(s) issued for the building, and made available to the enforcement agency for all applicable inspections. I understand that a completed signed copy of this Certificate of Compliance is required to be included with the documentation the builder provides to the building owner at occupancy.

Responsible Designer Name: Erik Ring	Responsible Designer Signature:
Company: LPA Design Studios	Date Signed: 2022-05-25
Address: 431 I Street Suite 107	License: 31731
City/State/Zip: Sacramento CA 95814	Phone: 949.261.1001

STATE OF CALIFORNIA
Nonresidential Building Commissioning
NRCC-CXR-E — CALIFORNIA ENERGY COMMISSION

CERTIFICATE OF COMPLIANCE		NRCC-CXR-E
Project Name:	Davis Aquatics Center	Report Page: (Page 3 of 6)
Project Address:	315 W 14th	Date Prepared: 5/25/2022

F. DESIGN REVIEW KICKOFF MEETING

This table indicates that the design reviewer meets the qualification requirements per Title 24, Part 1 Section 10-103(a)1 and demonstrates compliance with design review kickoff requirements per §120.8(d)2. This meeting should occur during the Schematic Design phase of the project.

Design Review Kickoff Meeting Details

01	Date of Design Review Kickoff Meeting:		2022-05-25
02	Meeting Attendees: (one person may play multiple roles)		
	☐ Owner/Facility Manager:	☒ Design Reviewer(s):	Chen Zhu
	☐ Project Manager:	☐ Design Architect/ Engineer(s):	
	☐ Contractor:	☐ Certified Acceptance Test Tech(s):	
	☐ Commissioning Provider:	☐ Energy/ T24 Part 6 Consultant:	

Design Reviewer Qualifications per Title 24 Part 1 Section 10-103(a)1

		Do the Design Reviewer(s) meet these qualifications? Yes	No
03	In addition, for buildings with >= 10,000 ft^2 but < 50,000 ft^2, the design reviewer(s) shall be a qualified in-house engineer or architect with no other project involvement or a third party engineer, architect, or contractor	●	○
04	The design reviewer(s) for this project will be:	Chen Zhu	

Preliminary Construction Schedule

	Start Date	Completion Date
05	Schematic Design	2021-01-25	2021-04-16
06	Design Development	2021-04-17	2021-09-17
07	Construction Documents	2021-09-24	2021-10-28
08	Construction	2023-05-31	2023-07-25
09	Building Turnover	2025-07-01	

Project Goals Related to Energy Efficiency

10	Operational Costs	TBD
11	Desired Building Lifespan	30 Years
12	Equipment Lifecycle	25-35 Years
13	Project Energy Efficiency Goals	High Efficiency Split Systems
14	Envelope Goals	Insulation > R19

LPA
ARCHITECTURE ENGINEERING INTERIORS
LANDSCAPE ARCHITECTURE PLANNING

916-287-2400 Office
916-287-2401 Fax
LPADesignStudios.com
431 I Street,
Suite 107
Sacramento, California 95814

This document and all other project documents, ideas, aesthetics and designs incorporated therein are instruments of service. All project documents are copyright protected, are the property of LPA, Inc. (LPA) and cannot be lawfully used in whole or in part for any project or purpose except as set forth in the contractual agreement between LPA and its Client. The unauthorized disclosure and/or use of the project documents (including the creation of derivative works), may give rise to liability for copyright infringement, unlawful disclosure, use or misappropriation of property rights held by LPA. The unauthorized use of the project documents will give rise to the recovery of monetary losses and damages including attorney fees and costs for which the unauthorized user will be held liable.
Project documents describe the design intent of the work and are not a representation of as-built or existing conditions. LPA is not responsible for any discrepancies between the project documents and the existing conditions.

© LPA, Inc.

DAVIS SR HIGH SCHOOL
AQUATICS CENTER
315 W 14TH ST., DAVIS, CA 95616

Developed for
DAVIS JOINT UNIFIED SCHOOL DISTRICT

Revision	Date

Submittal	Date
50% DD REVIEW	06/15/2021
100% DD SUBMITTAL	07/26/2021
50% CD REVIEW	10/08/2021
100% CD DSA SUBMITTAL	10/22/2021
DSA SUBMITTAL	02/24/2022

Job Number	1904413
Date Published	03/24/2022
Checked By	LPA
Scale	

MECHANICAL SCHEDULES

M0.20

Project Name:	Davis Aquatics Center	NRCC-PRF-01-E	Page 1 of 12
Project Address:	315 W 14th Davis 95616	Calculation Date/Time:	10:18, Fri, Oct 22, 2021
Input File Name:	1904413 Davis Aquatics, CD_AL.cibd19x		

A. GENERAL INFORMATION

1.	Project Location (city)	Davis	8.	Standards Version	Compliance2019
2.	CA Zip Code	95616	9.	Compliance Software (version)	EnergyPro 8.1
3.	Climate Zone	12	10.	Weather File	SACRAMENTO-EXECUTIVE_724830_CZ2010.epw
4.	Total Conditioned Floor Area in Scope	256 ft²	11.	Building Orientation (deg)	(N) 0 deg
5.	Total Unconditioned Floor Area	0 ft²	12.	Permitted Scope of Work	NewEnvelopeAndMechanical
6.	Total # of Stories (Habitable Above Grade)	1	13	Building Type(s)	Nonresidential
7.	Total # of dwelling units	0	14	Gas Type	NaturalGas

B. PROJECT SUMMARY

Table Instructions: Table B shows which building components are included in the performance calculation. If indicated as not included, the project must show compliance prescriptively if within permit application.

Building Components Complying via Performance					Building Components Complying Prescriptively	
Envelope	☒ Performance ☐ Not Included	Covered Process: Commercial Kitchens	☐ Performance ☒ Not Included	*The following building components are ONLY eligible for prescriptive compliance and should be documented on the NRCC form listed if within the scope of the permit application (i.e. compliance will not be shown on the NRCC-PRF-E).*		
Mechanical	☒ Performance ☐ Not Included	Covered Process: Computer Rooms	☐ Performance ☒ Not Included	Indoor Lighting (Unconditioned)§140.6	NRCC-LTI -E is required	
				Outdoor Lighting §140.7	NRCC-LTO-E is required	
Domestic Hot Water	☒ Performance ☐ Not Included	Covered Process: Laboratory Exhaust	☐ Performance ☒ Not Included	Sign Lighting §140.8	NRCC -LTS-E is required	
				Mandatory Measures		
Lighting (Indoor Conditioned)	☐ Performance			*Electrical power systems, commissioning and solar ready requirements are mandatory and should be documented on the NRCC form listed if applicable (i.e. compliance will not be shown on the NRCC-PRF-E.)*		
	☒ Not included			Electrical Power Distribution 110.11	NRCC-ELC-E is required	
Solar Thermal Water Heating	☐ Performance			Commissioning §120.8	NRCC-CXR-E is required	
	☒ Not included			Solar Ready §110.10	NRCC-SRA-E is required	

Project Name:	Davis Aquatics Center	NRCC-PRF-01-E	Page 2 of 12
Project Address:	315 W 14th Davis 95616	Calculation Date/Time:	10:18, Fri, Oct 22, 2021
Input File Name:	1904413 Davis Aquatics, CD_AL.cibd19x		

C1. COMPLIANCE RESULTS FOR PERFORMANCE COMPONENTS (Annual TDV Energy Use, kBtu/ft ²-yr)

COMPLIES

Energy Component	Standard Design (TDV)	Proposed Design (TDV)	Compliance Margin (TDV)[1]
Space Heating	27.27	40.84	-13.57
Space Cooling	104.37	102.25	2.12
Indoor Fans	195.44	2.62	192.82
Heat Rejection	--	--	--
Pumps & Misc.	--	--	--
Domestic Hot Water	31.60	103.28	-71.68
Indoor Lighting	28.76	28.76	--
ENERGY STANDARDS COMPLIANCE TOTAL	**387.44**	**277.75**	**109.69 (28.3%)**

[1] *Notes: The number in parenthesis following the Compliance Margin in column 4, represents the Percent Better than Standard.*

C2. RESULTS FOR 'ABOVE CODE' QUALIFICATIONS[1]

☐ This project is pursuing CalGreen Tier 1 ☐ This project is pursuing CalGreen Tier 2

Miscellaneous Energy Component	Standard Design (TDV)	Proposed Design (TDV)	Compliance Margin (TDV)[2]
Receptacle	168.46	168.46	--
Process	45.35	45.35	--
Other Ltg	40.48	40.48	--
Process Motors	--	--	--
COMPLIANCE TOTAL PLUS MISCELLANEOUS COMPONENTS	**641.73**	**532.04**	**109.7 (17.1%)**

[1] *Notes: This table is used to document compliance with programs OTHER THAN Title 24 Part 6, if applicable.*

D. EXCEPTIONAL CONDITIONS

This project includes partial performance compliance scope options. The building must show compliance with all other applicable compliance scope options (performance or prescriptively) before occupying.

This project uses the Simplified Geometry Performance Modeling Approach which is not capable of modeling daylighting controls and assumes the prescriptive Secondary Daylit Control requirements are met. PRESCRIPTIVE COMPLIANCE documentation (form NRCC-LTI-02-E) for the requirements of section 140.6(d) Automatic Daylighting Controls in Secondary Daylit Zones is required.

Project Name:	Davis Aquatics Center	NRCC-PRF-01-E	Page 3 of 12
Project Address:	315 W 14th Davis 95616	Calculation Date/Time:	10:18, Fri, Oct 22, 2021
Input File Name:	1904413 Davis Aquatics, CD_AL.cibd19x		

E. HERS VERIFICATION

This Section Does Not Apply

F. ADDITIONAL REMARKS

This Section Does Not Apply

G. ENVELOPE GENERAL INFORMATION

1	2	3	4
Opaque Surfaces & Orientation	**Total Gross Surface Area (ft²)**	**Total Fenestration Area (ft²)**	**Window to Wall Ratio (%)**
North-Facing[1]	145 ft²	0 ft²	00.0%
East-Facing[2]	477 ft²	13 ft²	02.7%
South-Facing[3]	125 ft²	0 ft²	00.0%
West-Facing[4]	0 ft²	0 ft²	00.0%
Total	**747 ft²**	**13 ft²**	**01.7%**
Roof	256 ft²	0 ft²	00.0%

Notes:
[1] *North-Facing is oriented to within 45 degrees of true north, including 45°00'00" east of north (NE), but excluding 45°00'00" west of north (NW).*
[2] *East-Facing is oriented to within 45 degrees of true east, including 45°00'00" south of east (SE), but excluding 45°00'00" north of east (NE).*
[3] *South-Facing is oriented to within 45 degrees of true south, including 45°00'00" west of south (SW), but excluding 45°00'00" east of south (SE).*
[4] *West-Facing is oriented to within 45 degrees of true west, including 45°00'00" north of due west (NW), but excluding 45°00'00" south of west (SW).*

H. FENESTRATION ASSEMBLY SUMMARY §110.6

1.	2.	3.	4.	5.	6.	7.	8.	9.
Fenestration Assembly Name / Tag or I.D.	**Fenestration Type / Product Type / Frame Type**	**Certification Method[1]**	**Assembly Method**	**Area ft²**	**Overall U-factor**	**Overall SHGC**	**Overall VT**	**Status[2]**
PPG SOLARBAN 70 XL Clear	VerticalFenestration FixedWindow MetalFraming	CDG Equations	SiteBuilt	13	0.29 (CDG)	0.27 (CDG)	0.63 (CDG)	N

[1] *Newly installed fenestration shall have a certified NFRC Label Certificate or use the CEC default tables found in Table 110.6-A and Table 110.6-B. Center of Glass (COG) values are for the glass only, determined by the manufacturer, and are shown for ease of verification. Site-built fenestration values are calculated per Nonresidential Appendix NA6 and are used in the analysis.*
[2] *Status: N - New, A – Altered, E – Existing*

Project Name:	Davis Aquatics Center	NRCC-PRF-01-E	Page 4 of 12
Project Address:	315 W 14th Davis 95616	Calculation Date/Time:	10:18, Fri, Oct 22, 2021
Input File Name:	1904413 Davis Aquatics, CD_AL.cibd19x		

I. ENVELOPE DETAILS §120.7 & §140.3

I1. OPAQUE SURFACE ASSEMBLY SUMMARY

1	2	3	4	5	6	7	8	9
Surface Name	**Surface Type**	**Description of Assembly Layers**	**Area (ft²)**	**Framing Type**	**Cavity R-Value**	**Continuous R-Value**	**U-Factor / F-Factor / C-Factor**	**Status[1]**
8 CMU Wall7	ExteriorWall	Concrete - Part Grouted and Empty - 125 lb/ft3 - 8 in. Air - Cavity - Wall Roof Ceiling - 4 in. or more	747	NA	0	NA	U-Factor: 0.281	N
R-19 Metal Deck Bldg12	Roof	Metal Standing Seam - 1/16 in. Metal standing seam roof, R-19	256	NA	19	NA	U-Factor: 0.082	N
Slab On Grade14	UndergroundFloor	Slab Type = UnheatedSlabOnGrade Insulation Orientation = None Insulation R-Value = R0	256	NA	0	NA	F-Factor: 0.730	N
8 CMU Wall71	InteriorWall	Concrete - Part Grouted and Empty - 125 lb/ft3 - 8 in. Air - Cavity - Wall Roof Ceiling - 4 in. or more	90	NA	0	NA	U-Factor: 0.246	N

[1] *Status: N - New, A – Altered, E – Existing*

I3. OPAQUE DOOR SUMMARY

1	2	3
Assembly Name	**Overall U-factor**	**Status[1]**
Metal Door10	0.700	N

K1. Dry System Equipment (furnaces, air handling units, heat pumps, VRF, etc.)

Dry System Equipment [1] (Fan & Economizer info included below in Table N)

1	2	3	4	5	6	7	8	9	10
			Heating				Cooling		
Equipment Name	**Equipment Type**	**Qty**	**Total Heating Output (kBtu/h)**	**Supp Heat Source (Y/N)**	**Supp Heat Output (kBtu/h)**	**Efficiency**	**Total Cooling Output (kBtu/h)**	**Efficiency**	**Status[2]**
FC-1 w/ HP-1	MiniSplitAC (SplitSPhase)	1	0	No	0	Elec. Res.	21	SEER-17.00 / EER-10.00	N
FC-2 w/ HP-2	MiniSplitHP (SplitSPhase)	1	19	Yes	7	HSPF-10.00	17	SEER-20.50 / EER-12.50	N

Status: N - New, A – Altered, E – Existing

K2. ECONOMIZER & FAN SYSTEMS SUMMARY §140.4[1]

1	2	3	4	5	6	7	8	9	10	11	12	13
				Supply Fan					Return Fan			
Name or Item Tag	**System Type: packaged, DOAS, etc.**	**Design OA**	**CFM**	**CFM**	**BHP**	**Watts**	**Control**	**CFM**	**BHP**	**Watts**	**Control**	**Economizer Type (if present)**	**Status[2]**
FC-3 w/ HP-3	MiniSplitAC	0	510	0.001	0.9	ConstantVolume	NA	NA	NA	NA	NA	NA	N
FC-1 w/ HP-1	MiniSplitAC	0	510	0.001	0.9	ConstantVolume	NA	NA	NA	NA	NA	NA	N
FC-2 w/ HP-2	MiniSplitHP	0	460	0.001	0.9	ConstantVolume	NA	NA	NA	NA	NA	NA	N

Status: N - New, A – Altered, E – Existing

K3. EXHAUST FAN SUMMARY

1	2	3	4	5	6	7
System ID	**Zone Name**	**Qty**	**CFM**	**Motor BHP**	**Motor Watts**	**Total Static Pressure (in H20)**
1018 IDF3	1-1018 IDF	1	10	0.001	0.9	0.41
1004 Electrical17	2-1004 Electrical	1	10	0.001	0.9	0.41
1006 Office23	3-1006 Office	1	40	0.001	0.9	0.10

Project Name:	Davis Aquatics Center	NRCC-PRF-01-E	Page 6 of 12
Project Address:	315 W 14th Davis 95616	Calculation Date/Time:	10:18, Fri, Oct 22, 2021
Input File Name:	1904413 Davis Aquatics, CD_AL.cibd19x		

K4. Wet System Equipment (boilers, chillers, cooling towers, etc.)

1	2	3	4	5	6	7	8	9	10	11	12
							Pumps				
Name or Item Tag	**Equipment Type**	**Qty**	**Vol (gal)**	**Rated Capacity (kBtu/h)**	**Efficiency**	**Standby Loss**	**Qty**	**GPM**	**HP**	**VSD (Y/N)**	**Status[1]**

Status: N - New, A – Altered, E – Existing

K5. SYSTEM FEATURES §120.2

1	2	3	4	5	6
System Name	**Optimum Start**	**Window Interlocks per §140.4(n)**	**Evaporative Cooling**	**Heat Recovery**	**Other Controls**
Davis Aquatics - Restroom1 - SHW	NA	NA	NA	NA	Fixed Temperature Control, No DDC
Davis Aquatics - Mechanic15 - SHW	NA	NA	NA	NA	Fixed Temperature Control, No DDC

Notes: This table includes controls related to the performance path only. For projects using the prescriptive path, mandatory and prescriptive controls requirements are documented on the NRCC-MCH-E

K6. MECHANICAL VENTILATION AND REHEAT §120.1

1	2	3	4	5	6	7	8	9
	Mechanical Ventilation							
Zone Name	**Ventilation Function**	**# hotel rooms**	**# of people**	**# of bedrooms**	**Supply OA CFM**	**Exhaust CFM**	**Conditioned Area (sf)**	**DCV or Occupant Sensor Controls, or Both**
1-1018 IDF	General - Unoccupied	0	0.07	0	0	10	50	NA
2-1004 Electrical	General - Unoccupied	0	0.16	0	0	10	105	NA
3-1006 Office	Office - Office space	0	1.01	0	15	40	101	NA

K7. DISTRIBUTION SUMMARY §120.4/140.4(l)

This Section Does Not Apply

Multifamily or Hotel/Motel Occupancy? (if "Yes", see DOMESTIC/SERVICE HOT WATER SYSTEM SUMMARY)	No
Does the Project include Zonal Systems?	Yes

Project Name:	Davis Aquatics Center	NRCC-PRF-01-E	Page 7 of 12
Project Address:	315 W 14th Davis 95616	Calculation Date/Time:	10:18, Fri, Oct 22, 2021
Input File Name:	1904413 Davis Aquatics, CD_AL.cibd19x		

K8. ZONAL SYSTEM AND TERMINAL UNIT SUMMARY § 140.4

1	2	3	4	5	6	7		8	9	10	11	12
			Rated Capacity (kBtuh)		Airflow (cfm)				Fan			
System ID	**Zone Name**	**System Type**	**Heating**	**Cooling**	**Design**	**Min.**		**Min. Ratio**	**BHP**	**Watts**	**Cycles**	**ECM Motor**
FC-3 w/ HP-3	1-1018 IDF	MiniSplitAC	NA	21.00	510	NA		NA	0.001	0.9	☐	☐
FC-1 w/ HP-1	2-1004 Electrical	MiniSplitAC	NA	21.00	510	NA		NA	0.001	0.9	☐	☐
FC-2 w/ HP-2	3-1006 Office	MiniSplitHP	19.00	17.00	460	NA		NA	0.001	0.9	☐	☐

K9. EVAPORATIVE COOLER SUMMARY

This Section Does Not Apply

L1. WATER HEATER EQUIPMENT SUMMARY

1	2	3	4	5	6	7	8	9	10	11	12	13	14
Name	**Heater Element Type**	**Tank Type**	**Qty**	**Tank Vol (gal)**	**Rated Input**	**Rated Input Unit**	**Efficiency**	**Efficiency Unit**	**Tank Insulation R-value (Int/Ext)**	**Standby Loss Fraction**	**1st Hour Rating or Flow Rate (gal)**	**Heat Pump Type**	**Tank Location or Ambient Condition**
EWH-1 - LCL40-22	Electricity	Storage	1	40.00	6.0	kW	0.93	UEF	NA	NA	NA	NA	NA
GWH-1 - GT200N-A16	Gas	Storage	1	100.00	200	kBtu/h	0.98	Therml. Eff.	NA	0.023	NA	NA	NA

Project Name:	Davis Aquatics Center	NRCC-PRF-01-E	Page 8 of 12
Project Address:	315 W 14th Davis 95616	Calculation Date/Time:	10:18, Fri, Oct 22, 2021
Input File Name:	1904413 Davis Aquatics, CD_AL.cibd19x		

O. DECLARATION OF REQUIRED CERTIFICATES OF INSTALLATION

Table Instructions: Selections shall be made by Documentation Author to indicate which Certificates of Installation must be submitted for the features to be recognized for compliance. These documents must be retained and provided to the building inspector during construction and can be found online at: https://www.energy.ca.gov/title24/2019standards/2019_compliance_documents/Nonresidential_Documents/NRCI/

Building Component	YES	NO	Form/Title	Field Inspector Pass	Fail
Envelope	☒	☐	NRCI-ENV-01-E - Must be submitted for all buildings	☐	☐
Mechanical	☒	☐	NRCI-MCH-01-E - Must be submitted for all buildings	☐	☐
Plumbing	☒	☐	NRCI-PLB-01-E - Must be submitted for all buildings	☐	☐
	☐	☒	NRCI-PLB-02-E - Must be submitted for high-rise residential and hotel/ motel central hot water distribution systems to be recognized for compliance	☐	☐
	☐	☒	NRCI-PLB-03-E - Must be submitted for high-rise residential and hotel/motel single dwelling unit hot water system distribution systems to be recognized for compliance	☐	☐
	☐	☒	NRCI-PLB-21-E - Must be HERS verified for central systems in high-rise residential hotel/ motel application.	☐	☐
	☐	☒	NRCI-PLB-22-E – Must be HERS verified for single dwelling unit systems in high-rise residential, hotel/motel application	☐	☐
	☐	☒	NRCI-STH-01-E - Must be submitted for solar hot water heating systems	☐	☐
Indoor Lighting	☐	☒	NRCI-LTI-01-E - Must be submitted for all buildings	☐	☐
	☐	☒	NRCI-LTI-02-E – Must be submitted for a lighting control system, or for an Energy Management Control System (EMCS) to be recognized for compliance	☐	☐
	☐	☒	NRCI-LTI-04-E - Must be submitted for two interlocked systems serving an auditorium, a convention center, a conference room, a multipurpose room, or a theater to be recognized for compliance	☐	☐
	☐	☒	NRCI-LTI-05-E - Must be submitted for a Power Adjustment Factor (PAF) to be recognized for compliance	☐	☐
	☐	☒	NRCI-LTI-06-E - Must be submitted for additional wattage installed in a video conferencing studio to be recognized for compliance	☐	☐
Covered Process	☐	☒	NRCI-PRC-01-E - Must be submitted for all Covered Processes	☐	☐

Project Name:	Davis Aquatics Center	NRCC-PRF-01-E	Page 9 of 12
Project Address:	315 W 14th Davis 95616	Calculation Date/Time:	10:18, Fri, Oct 22, 2021
Input File Name:	1904413 Davis Aquatics, CD_AL.cibd19x		

P. DECLARATION OF REQUIRED CERTIFICATES OF ACCEPTANCE

Table Instructions: Selections shall be made by Documentation Author to indicate which Certificates of Acceptance must be submitted for the features to be recognized for compliance. These documents must be provided to the building inspector during construction and must be completed through an Acceptance Test Technician Certification Provider (ATTCP). For more information visit:https://www.energy.ca.gov/title24/2019standards/2019_compliance_documents/Nonresidential_Documents/NRCA/

Building Component	YES	NO	Form/Title	Field Inspector Pass	Fail
Envelope	☒	☐	NRCA-ENV-02-F - NRFC label verification for fenestration	☐	☐
	☐	☐	NRCA-ENV-03-F - Daylighting Design PAFs	☐	☐
Indoor Lighting	☐	☒	NRCA-LTI-02-A - Occupancy Sensors and Automatic Time Switch Controls	☐	☐
	☐	☒	NRCA-LTI-03-A - Automatic Daylight Controls	☐	☐
	☐	☒	NRCA-LTI-04-A - Demand Responsive Lighting Controls	☐	☐
	☐	☒	NRCA-LTI-05-A - Institutional Tuning Power Adjustment Factor (PAF)	☐	☐
Covered Process	☐	☒	NRCA-PRC-02-F - Kitchen Exhaust	☐	☐
	☐	☒	NRCA-PRC-03-F – Garage Exhaust	☐	☐
	☐	☒	NRCA-PRC-12-F – Elevator Lighting and Ventilation Controls	☐	☐
	☐	☒	NRCA-PRC-13-F –Escalator and Moving Walkways Speed Control	☐	☐
	☐	☒	NRCA-PRC-14-F – Lab Exhaust Ventilation System	☐	☐
	☐	☒	NRCA-PRC-15-F - Fume Hood Automatic Sash Closures System	☐	☐

Project Name:	Davis Aquatics Center	NRCC-PRF-01-E	Page 10 of 12
Project Address:	315 W 14th Davis 95616	Calculation Date/Time:	10:18, Fri, Oct 22, 2021
Input File Name:	1904413 Davis Aquatics, CD_AL.cibd19x		

P. DECLARATION OF REQUIRED CERTIFICATES OF ACCEPTANCE

Table Instructions: Selections shall be made by Documentation Author to indicate which Certificates of Acceptance must be submitted for the features to be recognized for compliance. These documents must be provided to the building inspector during construction and must be completed through an Acceptance Test Technician Certification Provider (ATTCP). For more information visit:https://www.energy.ca.gov/title24/2019standards/2019_compliance_documents/Nonresidential_Documents/NRCA/

Building Component	YES	NO	Form/Title	Field Inspector Pass	Fail
Mechanical	☒	☐	NRCA-MCH-02-A Outdoor Air must be submitted for all newly installed HVAC units. Note: MCH02-A can be performed in conjunction with MCH-07-A Supply Fan VFD Acceptance (if applicable) since testing activities overlap	☐	☐
	☒	☐	NRCA-MCH-03-A Constant Volume Single Zone HVAC	☐	☐
	☐	☒	NRCA-MCH-04(a)-H Air Distribution Duct Leakage - HERS Verification required	☐	☐
	☐	☐	NRCA-MCH-04(b)-A Air Distribution Duct Leakage - ATT only	☐	☐
	☐	☒	NRCA-MCH-05-A Air Economizer Controls	☐	☐
	☐	☒	NRCA-MCH-06-A Demand Control Ventilation Systems Acceptance must be submitted for all systems required to employ demand controlled ventilation (refer to §120.1(c)3) can vary outside ventilation flow rates based on maintaining interior carbon dioxide (CO2) concentration setpoints	☐	☐
	☐	☒	NRCA-MCH-07-A Supply Fan Variable Flow Controls	☐	☐
	☐	☒	NRCA-MCH-08-A Valve Leakage Test	☐	☐
	☐	☒	NRCA-MCH-09-A Supply Water Temperature Reset Controls	☐	☐
	☐	☒	NRCA-MCH-10-A Hydronic System Variable Flow Controls	☐	☐
	☐	☒	NRCA-MCH-11-A Automatic Demand Shed Controls	☐	☐
	☐	☒	NRCA-MCH-12-A FDD for Packaged Direct Expansion Units	☐	☐
	☐	☒	NRCA-MCH-13-A Automatic FDD for Air Handling Units and Zone Terminal Units Acceptance	☐	☐
	☐	☒	NRCA-MCH-14-A Distributed Energy Storage DX AC Systems Acceptance	☐	☐
	☐	☒	NRCA-MCH-15-A Thermal Energy Storage (TES) System Acceptance	☐	☐
	☐	☒	NRCA-MCH-16-A Supply Air Temperature Reset Controls	☐	☐
	☐	☒	NRCA-MCH-17-A Condenser Water Temperature Reset Controls	☐	☐
	☐	☒	NRCA-MCH-18 Energy Management Control Systems	☐	☐
	☐	☒	NRCA-MCH-19 Occupancy Sensor Controls	☐	☐

Project Name:	Davis Aquatics Center	NRCC-PRF-01-E	Page 11 of 12
Project Address:	315 W 14th Davis 95616	Calculation Date/Time:	10:18, Fri, Oct 22, 2021
Input File Name:	1904413 Davis Aquatics, CD_AL.cibd19x		

Q. DECLARATION OF REQUIRED CERTIFICATES OF VERIFICATION

Table Instructions: Selections shall be made by Documentation Author to indicate which Certificates of Verification must be submitted for the features to be recognized for compliance. These documents must be retained and provided to the building inspector during construction and can be found online at: https://www.energy.ca.gov/title24/2019standards/2019_compliance_documents/Nonresidential_Documents/NRCV/

Building Component	YES	NO	Form/Title	Field Inspector Pass	Fail
Mechanical	☐	☒	NRCV-MCH-04-H Duct Leakage Test	☐	☐
	☐	☒	NRCV-MCH-24-H Enclosure Air Leakage	☐	☐
	☐	☒	NRCV-MCH-27 Indoor Air Quality & Mechanical Ventilation	☐	☐
	☐	☒	NRCV-MCH-32-H Local Mechanical Exhaust	☐	☐
Plumbing	☐	☒	NRCV-PLB-21 H - HERS verified central systems in high-rise residential, hotel/motel application	☐	☐
	☐	☒	NRCV-PLB-22-H - HERS verified single dwelling unit systems in high-rise residential, hotel/motel application	☐	☐

R. UNMET LOAD HOURS

This Section Does Not Apply

Project Name:	Davis Aquatics Center	NRCC-PRF-01-E	Page 12 of 12
Project Address:	315 W 14th Davis 95616	Calculation Date/Time:	10:18, Fri, Oct 22, 2021
Input File Name:	1904413 Davis Aquatics, CD_AL.cibd19x		

DOCUMENTATION AUTHOR'S DECLARATION STATEMENT

I certify that this Certificate of Compliance documentation is accurate and complete.

Documentation Author Name: Angelica Larios	Signature: Angelica Larios
Company: LPA, Inc.	
Address: 431 I Street Suite 107	Signature Date: 2022-10-22
City/State/Zip: Sacramento, CA 95814	CEA/ HERS Certification Identification (if applicable):
Phone:(949 261-1001	

RESPONSIBLE PERSON'S DECLARATION STATEMENT

I certify the following under penalty of perjury, under the laws of the State of California:
1. The information provided on this Certificate of Compliance is true and correct.
2. I am eligible under Division 3 of the Business and Professions Code to accept responsibility for the building design or system design identified on this Certificate of Compliance (responsible designer)
3. The energy features and performance specifications, materials, components, and manufactured devices for the building design or system design identified on this Certificate of Compliance conform to the requirements of Title 24, Part 1 and Part 6 of the California Code of Regulations.
4. The building design features or system design features identified on this Certificate of Compliance are consistent with the information provided on other applicable compliance documents, worksheets, calculations, plans and specifications submitted to the enforcement agency for approval with this building permit application.
5. I will ensure that a completed signed copy of this Certificate of Compliance shall be made available with the building permit(s) issued for the building, and made available to the enforcement agency for all applicable inspections. I understand that a completed signed copy of this Certificate of Compliance is required to be included with the documentation the builder provides to the building owner at occupancy.

Responsible Envelope Designer Name: YOUNG MIN	Signature:
Company: LPA Design Studios	
Address: 431 I Street Suite 107	Date Signed: 3-16-2022
City/State/Zip: Sacramento, CA 95814	
Phone: 949.261.1001	Title: ARCHITECT License #: 31731
Responsible Lighting Designer Name:	Signature: NOT IN SCOPE
Company:	
Address:	Date Signed:
City/State/Zip:	
Phone:	Title: License #:
Responsible Mechanical Designer Name: Erik Ring	Signature:
Company: LPA Design Studios	
Address: 431 I Street Suite 107	Date Signed: 10-22-2021
City/State/Zip: Sacramento, CA 95814	
Phone: 949.261.1001	Title: Mechanical Engineer License #: M31731

IDENTIFICATION STAMP
DIV. OF THE STATE ARCHITECT
APP: 02-119490 INC:
REVIEWED FOR
SS ☑ FLS ☑ ACS ☑
DATE: 09/13/2022

LPA
ARCHITECTURE ENGINEERING INTERIORS
LANDSCAPE ARCHITECTURE PLANNING

916-287-2400 Office
916-287-2401 Fax
LPADesignStudios.com
431 I Street,
Suite 107
Sacramento, California 95814

REGISTERED PROFESSIONAL ENGINEER CHRISTOPHER D. TWIST M32973 12/31/2022 MECHANICAL STATE OF CALIFORNIA

This document and all other project documents, drawings and designs incorporated therein are instruments of service. All project documents are copyright protected, are the property of LPA, Inc. (LPA) and cannot be lawfully used in whole or in part for any project or purpose except as set forth in the contractual agreement between LPA and its Client. The unauthorized disclosure and/or use of the project documents (including the creation of derivative works), may give rise to liability for copyright infringement, unlawful disclosure, use or misappropriation of property rights held by LPA. The unauthorized use of the project documents will give rise to the recovery of monetary losses and damages including attorney fees and costs for which the unauthorized user will be held liable.
Project documents describe the design intent of the work and are not a representation of as-built or existing conditions. LPA is not responsible for any discrepancies between the project documents and the existing conditions.
© LPA, Inc.

DAVIS SR HIGH SCHOOL AQUATICS CENTER
315 W 14TH ST., DAVIS, CA 95616

Developed for
DAVIS JOINT UNIFIED SCHOOL DISTRICT

Revision	Date

Submittal	Date
50% DD REVIEW	06/15/2021
100% DD SUBMITTAL	07/26/2021
50% CD REVIEW	10/08/2021
100% CD DSA SUBMITTAL	10/22/2021
DSA SUBMITTAL	02/24/2022

Job Number	1904413
Date Published	03/24/2022
Checked By	LPA
Scale	

MECHANICAL
TITLE-24 FORMS

M0.30

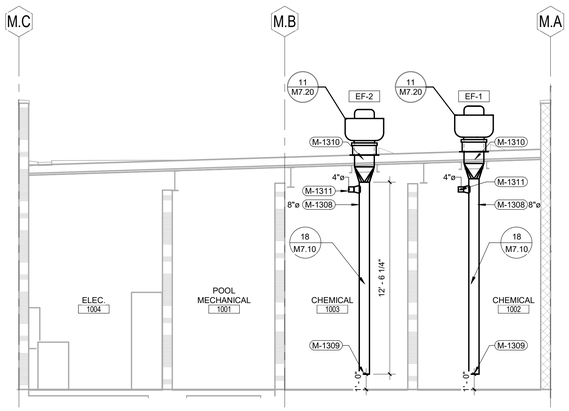

CHEMICAL STORAGE ROOMS | 1/4" = 1'-0" | 13

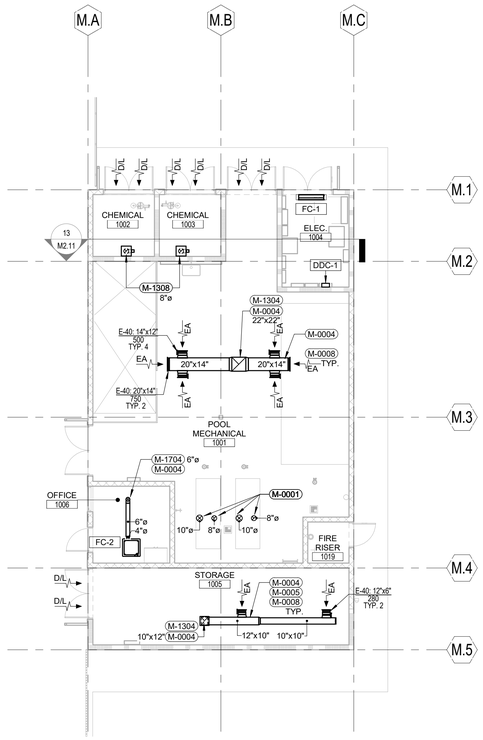

1 - MECHANICAL - POOL MECHANICAL BUILDING FLOOR PLAN | 1/8" = 1'-0" | 05

KEYNOTES

ITEM	DESCRIPTION
M-0001	REFER TO SWIMMING POOL DRAWING A02.1 FOR BOILER INTAKE AND EXHAUST EQUIPMENT POINT OF CONNECTION AND ELEVATION, LOCATION. SEE DETAIL 19/M7.10 FOR BOILER INTAKE AND EXHAUST PIPE MATERIAL & ROOF PENETRATION.
M-0004	ALL DUCTWORK IN THIS BUILDING SHALL BE 304 SS 16 GA UNLESS OTHERWISE INDICATED. INCLUDING HANGER STRAPS, CLAMPS AND SCREWS.
M-0005	PITCH DUCTWORK BACK TO REGISTERS, 1/8" PER FOOT
M-0008	DUCTWORK AND PIPING TO BE CLEANED/PRIMED FOR PAINTING, BY OTHERS
M-1304	STAINLESS STEEL 304 EXHAUST AIR DUCT UP THRU ROOF
M-1308	PVC SCHEDULE 40 EXHAUST AIR DUCT UP AND DOWN
M-1309	EXTEND TO WITHIN 12" OFF THE FINISH FLOOR. PROVIDE OPENING WITH INDUSTRIAL PTFE MESH 50% FREE AREA
M-1310	PROVIDE NECESSARY 304 STAINLESS STEEL TRANSITION FROM EXHAUST FAN DUCT SIZE TO 8" DIAMETER ROUND PVC DUCTWORK
M-1311	ROUND OPENING WITH INDUSTRIAL PTFE MESH 50% FREE AREA
M-1704	STAINLESS STEEL OUTSIDE AIR DUCT UP THRU ROOF

LEGEND

- METAL STUD WALL CONSTRUCTION
- 1 HOUR RATED MASONRY WALL CONSTRUCTION
- 1 HOUR RATED MASONRY WALL CONSTRUCTION
- MASONRY WALL CONSTRUCTION

PLAN NOTES

1. PROVIDE ACCESS PANELS IN NON-ACCESSIBLE AREAS (RATED OR NON-RATED) MINIMUM 12"X12" SIZE FOR COMBINATION FIRE/SMOKE DAMPERS. INSTALL LARGER ACCESS PANELS FOR LARGER EQUIPMENT AS REQUIRED BY CODE. COORDINATE WITH ARCHITECT FOR APPROVAL OF FINAL LOCATIONS PRIOR TO INSTALLATION.
2. PROVIDE FIRESTOPPING AT PASS THROUGH DUCT PENETRATIONS THROUGH RATED WALLS. DUCTWORK SHALL BE A MINIMUM 26 GA SHEET METAL. COORDINATE WITH OTHER TRADES THAT MAY HAVE PENETRANTS AROUND THE SAME AREA. REFER TO ARCHITECTURAL SHEETS FOR RATING ASSEMBLIES.
3. INSULATION MATERIALS APPLIED TO DUCTWORK SHALL HAVE A FLAME SPREAD INDEX OF NOT MORE THAN 25 AND SMOKE DENSITY NOT EXCEEDING 50.
4. REQUIRED OFFSETS, COMPONENTS, ACCESSORIES, AND FITTINGS MAY NOT BE SHOWN BUT SHALL BE PROVIDED AS REQUIRED TO AVOID INTERFERENCES WITH UNFORESEEN COMPONENTS.
5. PROVIDE DIELECTRIC UNIONS, GASKETS, AND FASTENERS AT DISSIMILAR METAL CONNECTIONS OF CONTACT POINTS.
6. REFER TO PLUMBING DRAWINGS FOR CONDENSATE DRAIN PIPE ROUTING.
7. MAINTAIN A 3'-0" DISTANCE FROM ENVIRONMENTAL EXHAUST OUTLETS (AS DEFINED IN CMC 502.2.1) TO BUILD OPENINGS AND 10'-0" DISTANCE TO MECHANICALLY FORCED AIR INLET.
8. DUCT SIZE INDICATED ON PLANS ARE THE "FREE AREA" INSIDE DIMENSIONS OF THE DUCT. INCREASE THE SIZE OF THE DUCT TO ACCOMMODATE ACOUSTICAL SILENCERS AND/OR DUCT LINERS. FOR EXAMPLE, A DUCT SIZE SHOWN AS 12" X12" WITH 2" LINER SHALL BE SUPPLIED WITH A 16"X16" DUCT.
9. ROOF SUPPORTS SHALL BE POSITIVELY ATTACHED TO THE ROOF STRUCTURE.
10. INSTALL DUCT SYSTEMS IN THE FOLLOWING ORDER FROM LOWEST TO HIGHEST REFERENCED FROM THE FINISHED CEILING HEIGHT:
    - SUPPLY DUCT
    - RETURN/RELIEF DUCT
    - EXHAUST DUCT
11. PROVIDE MANUAL SHEET METAL VOLUME DAMPER PRIOR TO EACH SUPPLY DIFFUSER/REGISTER AT THE BRANCH DUCT LOCATION. IF THE MANUAL IS AN INACCESSIBLE LOCATION, CONTRACTOR TO PROVIDE CABLE OPERATED DAMPER (COD) FOR HIGH CEILINGS AND ALL DRYWALL CEILING LOCATIONS. DAMPERS SHALL BE INDICATED ON SHOP DRAWINGS FOR COORDINATION AND APPROVAL.
12. ALL LOW VOLTAGE CONDUIT SHALL BE CONCEALED ABOVE CEILING AND WITHIN WALLS

KEY PLAN

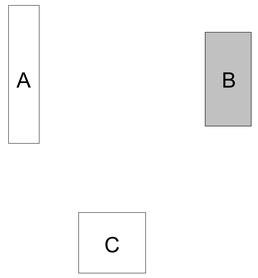

IDENTIFICATION STAMP
DIV. OF THE STATE ARCHITECT
APP: 02-119490 INC:
REVIEWED FOR
SS ☑ FLS ☑ ACS ☑
DATE: 09/13/2022

LPA

ARCHITECTURE ENGINEERING INTERIORS
LANDSCAPE ARCHITECTURE PLANNING

916-287-2400 Office

916-287-2401 Fax

LPADesignStudios.com

431 I Street,
Suite 107
Sacramento, California 95814

REGISTERED PROFESSIONAL ENGINEER
CHRISTOPHER D. TANG
M32973
12/31/2022
MECHANICAL
STATE OF CALIFORNIA

This document and all other project documents, ideas, aesthetics and designs incorporated therein are instruments of service. All project documents are copyright protected, are the property of LPA, Inc. (LPA) and cannot be lawfully used in whole or in part for any project or purpose except as set forth in the contractual agreement between LPA and its Client. The unauthorized disclosure and/or use of the project documents (including the creation of derivative works), may give rise to liability for copyright infringement, unlawful disclosure, use or misappropriation of property rights held by LPA. The unauthorized use of the project documents will give rise to the recovery of monetary losses and damages including attorney fees and costs for which the unauthorized user will be held liable.
Project documents describe the design intent of the work and are not a representation of as-built or existing conditions. LPA is not responsible for any discrepancies between the project documents and the existing conditions.

© LPA, Inc.

DAVIS SR HIGH SCHOOL
AQUATICS CENTER
315 W 14TH ST., DAVIS, CA 95616

Developed for
DAVIS JOINT UNIFIED SCHOOL DISTRICT

Revision	Date

Submittal	Date
50% DD REVIEW	06/15/2021
100% DD SUBMITTAL	07/26/2021
90% CD REVIEW	10/08/2021
100% CD DSA SUBMITTAL	10/22/2021
DSA SUBMITTAL	03/24/2022

Job Number	1904413
Date Published	03/24/2022
Checked By	LPA
Scale	As indicated

MECHANICAL - POOL MECHANICAL BUILDING FLOOR PLAN

M2.11

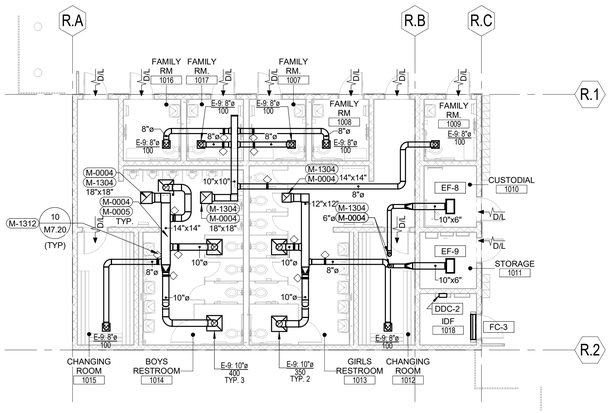

1 - MECHANICAL - POOL RESTROOM BUILDING FLOOR PLAN | 1/8" = 1'-0" | 05

KEYNOTES

ITEM	DESCRIPTION
M-0004	ALL DUCTWORK IN THIS BUILDING SHALL BE 304 SS 16 GA UNLESS OTHERWISE INDICATED. INCLUDING HANGER STRAPS, CLAMPS AND SCREWS.
M-0005	PITCH DUCTWORK BACK TO REGISTERS, 1/8" PER FOOT
M-1304	STAINLESS STEEL 304 EXHAUST AIR DUCT UP THRU ROOF
M-1312	DAMPERS IN THIS BUILDING FOR ALL INACCESSIBLE HARD LID CEILINGS. SEE M3.12 FOR LOCATIONS, RDCL.

LEGEND

- METAL STUD WALL CONSTRUCTION
- 1 HOUR RATED MASONRY WALL CONSTRUCTION
- 1 HOUR RATED MASONRY WALL CONSTRUCTION
- MASONRY WALL CONSTRUCTION

PLAN NOTES

1. PROVIDE ACCESS PANELS IN NON-ACCESSIBLE AREAS (RATED OR NON-RATED) MINIMUM 12"X12" SIZE FOR COMBINATION FIRE/SMOKE DAMPERS. INSTALL LARGER ACCESS PANELS FOR LARGER EQUIPMENT AS REQUIRED BY CODE. COORDINATE WITH ARCHITECT FOR APPROVAL OF FINAL LOCATIONS PRIOR TO INSTALLATION.
2. PROVIDE FIRESTOPPING AT PASS THROUGH DUCT PENETRATIONS THROUGH RATED WALLS. DUCTWORK SHALL BE A MINIMUM 26 GA SHEET METAL. COORDINATE WITH OTHER TRADES THAT MAY HAVE PENETRANTS AROUND THE SAME AREA. REFER TO ARCHITECTURAL SHEETS FOR RATING ASSEMBLIES.
3. INSULATION MATERIALS APPLIED TO DUCTWORK SHALL HAVE A FLAME SPREAD INDEX OF NOT MORE THAN 25 AND SMOKE DENSITY NOT EXCEEDING 50.
4. REQUIRED OFFSETS, COMPONENTS, ACCESSORIES, AND FITTINGS MAY NOT BE SHOWN BUT SHALL BE PROVIDED AS REQUIRED TO AVOID INTERFERENCES WITH UNFORESEEN COMPONENTS.
5. PROVIDE DIELECTRIC UNIONS, GASKETS, AND FASTENERS AT DISSIMILAR METAL CONNECTIONS OF CONTACT POINTS.
6. REFER TO PLUMBING DRAWINGS FOR CONDENSATE DRAIN PIPE ROUTING.
7. MAINTAIN A 3'-0" DISTANCE FROM ENVIRONMENTAL EXHAUST OUTLETS (AS DEFINED IN CMC 502.2.1) TO BUILD OPENINGS AND 10'-0" DISTANCE TO MECHANICALLY FORCED AIR INLET.
8. DUCT SIZE INDICATED ON PLANS ARE THE "FREE AREA" INSIDE DIMENSIONS OF THE DUCT. INCREASE THE SIZE OF THE DUCT TO ACCOMMODATE ACOUSTICAL SILENCERS AND/OR DUCT LINERS. FOR EXAMPLE, A DUCT SIZE SHOWN AS 12" X12" WITH 2" LINER SHALL BE SUPPLIED WITH A 16"X16" DUCT.
9. ROOF SUPPORTS SHALL BE POSITIVELY ATTACHED TO THE ROOF STRUCTURE.
10. INSTALL DUCT SYSTEMS IN THE FOLLOWING ORDER FROM LOWEST TO HIGHEST REFERENCED FROM THE FINISHED CEILING HEIGHT:
    - SUPPLY DUCT
    - RETURN/RELIEF DUCT
    - EXHAUST DUCT
11. PROVIDE MANUAL SHEET METAL VOLUME DAMPER PRIOR TO EACH SUPPLY DIFFUSER/REGISTER AT THE BRANCH DUCT LOCATION. IF THE MANUAL IS AN INACCESSIBLE LOCATION, CONTRACTOR TO PROVIDE CABLE OPERATED DAMPER (COD) FOR HIGH CEILINGS AND ALL DRYWALL CEILING LOCATIONS. DAMPERS SHALL BE INDICATED ON SHOP DRAWINGS FOR COORDINATION AND APPROVAL.
12. ALL LOW VOLTAGE CONDUIT SHALL BE CONCEALED ABOVE CEILING AND WITHIN WALLS

KEY PLAN

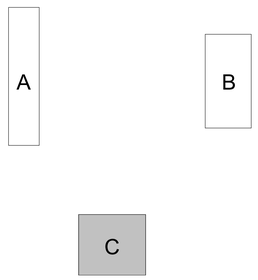

IDENTIFICATION STAMP
DIV. OF THE STATE ARCHITECT
APP: 02-119490 INC:
REVIEWED FOR
SS ☑ FLS ☑ ACS ☑
DATE: 09/13/2022

LPA
ARCHITECTURE ENGINEERING INTERIORS
LANDSCAPE ARCHITECTURE PLANNING

916-287-2400 Office
916-287-2401 Fax
LPADesignStudios.com
431 I Street,
Suite 107
Sacramento, California 95814

REGISTERED PROFESSIONAL ENGINEER
CHRISTOPHER D. TANG
M32973
12/31/2022
MECHANICAL
STATE OF CALIFORNIA

This document and all other project documents, ideas, aesthetics and designs incorporated therein are instruments of service. All project documents are copyright protected, are the property of LPA, Inc. (LPA) and cannot be lawfully used in whole or in part for any project or purpose except as set forth in the contractual agreement between LPA and its Client. The unauthorized disclosure and/or use of the project documents (including the creation of derivative works), may give rise to liability for copyright infringement, unlawful disclosure, use or misappropriation of property rights held by LPA. The unauthorized use of the project documents will give rise to the recovery of monetary losses and damages including attorney fees and costs for which the unauthorized user will be held liable.
Project documents describe the design intent of the work and are not a representation of as-built or existing conditions. LPA is not responsible for any discrepancies between the project documents and the existing conditions.

© LPA, Inc.

DAVIS SR HIGH SCHOOL AQUATICS CENTER
315 W 14TH ST., DAVIS, CA 95616

Developed for
DAVIS JOINT UNIFIED SCHOOL DISTRICT

Revision	Date

Submittal	Date
50% DD REVIEW	06/15/2021
100% DD SUBMITTAL	07/26/2021
50% CD REVIEW	10/08/2021
100% CD DSA SUBMITTAL	10/22/2021
DSA SUBMITTAL	03/24/2022

Job Number	1904413
Date Published	03/24/2022
Checked By	LPA
Scale	1/8" = 1'-0"

MECHANICAL - POOL RESTROOM BUILDING FLOOR PLAN

M2.12

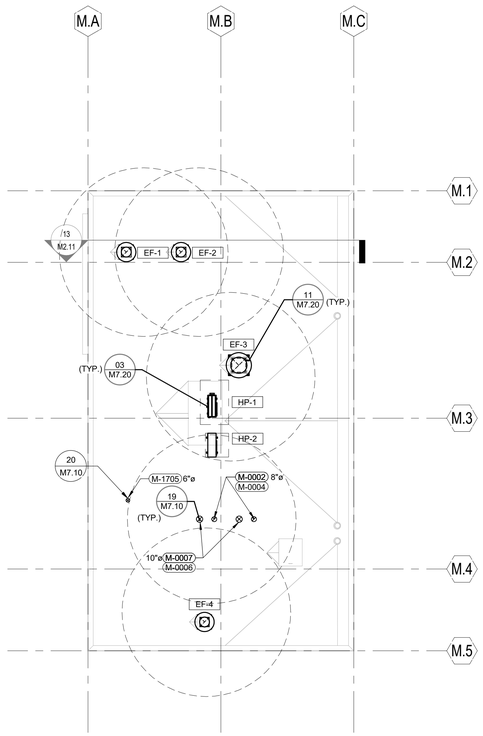

R - MECHANICAL - POOL MECHANICAL BUILDING ROOF PLAN 1/8" = 1'-0" 20

KEYNOTES

ITEM	DESCRIPTION
M-0002	BOILER FLUE EXHAUST DUCT DOWN THRU ROOF. TERMINATE 48" ABOVE ROOF.
M-0004	ALL DUCTWORK IN THIS BUILDING SHALL BE 304 SS 16 GA UNLESS OTHERWISE INDICATED. INCLUDING HANGER STRAPS, CLAMPS AND SCREWS.
M-0006	DUCTWORK TO BE CPVC AND HANGERS TO BE STAINLESS STEEL. SEE DETAIL 19/M7.10.
M-0007	BOILER AIR INTAKE DUCT DOWN THRU ROOF. TERMINATE 48" ABOVE ROOF.
M-1705	OUTSIDE AIR DUCT DOWN THRU ROOF

LEGEND

- METAL STUD WALL CONSTRUCTION
- 1 HOUR RATED MASONRY WALL CONSTRUCTION
- 1 HOUR RATED MASONRY WALL CONSTRUCTION
- MASONRY WALL CONSTRUCTION

PLAN NOTES

1. PROVIDE ACCESS PANELS IN NON-ACCESSIBLE AREAS (RATED OR NON-RATED) MINIMUM 12"X12" SIZE FOR COMBINATION FIRE/SMOKE DAMPERS. INSTALL LARGER ACCESS PANELS FOR LARGER EQUIPMENT AS REQUIRED BY CODE. COORDINATE WITH ARCHITECT FOR APPROVAL OF FINAL LOCATIONS PRIOR TO INSTALLATION.
2. PROVIDE FIRESTOPPING AT PASS THROUGH DUCT PENETRATIONS THROUGH RATED WALLS. DUCTWORK SHALL BE A MINIMUM 26 GA SHEET METAL. COORDINATE WITH OTHER TRADES THAT MAY HAVE PENETRANTS AROUND THE SAME AREA. REFER TO ARCHITECTURAL SHEETS FOR RATING ASSEMBLIES.
3. INSULATION MATERIALS APPLIED TO DUCTWORK SHALL HAVE A FLAME SPREAD INDEX OF NOT MORE THAN 25 AND SMOKE DENSITY NOT EXCEEDING 50.
4. REQUIRED OFFSETS, COMPONENTS, ACCESSORIES, AND FITTINGS MAY NOT BE SHOWN BUT SHALL BE PROVIDED AS REQUIRED TO AVOID INTERFERENCES WITH UNFORESEEN COMPONENTS.
5. PROVIDE DIELECTRIC UNIONS, GASKETS, AND FASTENERS AT DISSIMILAR METAL CONNECTIONS OF CONTACT POINTS.
6. REFER TO PLUMBING DRAWINGS FOR CONDENSATE DRAIN PIPE ROUTING.
7. MAINTAIN A 3'-0" DISTANCE FROM ENVIRONMENTAL EXHAUST OUTLETS (AS DEFINED IN CMC 502.2.1) TO BUILD OPENINGS AND 10'-0" DISTANCE TO MECHANICALLY FORCED AIR INLET.
8. DUCT SIZE INDICATED ON PLANS ARE THE "FREE AREA" INSIDE DIMENSIONS OF THE DUCT. INCREASE THE SIZE OF THE DUCT TO ACCOMMODATE ACOUSTICAL SILENCERS AND/OR DUCT LINERS. FOR EXAMPLE, A DUCT SIZE SHOWN AS 12" X12" WITH 2" LINER SHALL BE SUPPLIED WITH A 16"X16" DUCT.
9. ROOF SUPPORTS SHALL BE POSITIVELY ATTACHED TO THE ROOF STRUCTURE.
10. INSTALL DUCT SYSTEMS IN THE FOLLOWING ORDER FROM LOWEST TO HIGHEST REFERENCED FROM THE FINISHED CEILING HEIGHT:
    - SUPPLY DUCT
    - RETURN/RELIEF DUCT
    - EXHAUST DUCT
11. PROVIDE MANUAL SHEET METAL VOLUME DAMPER PRIOR TO EACH SUPPLY DIFFUSER/REGISTER AT THE BRANCH DUCT LOCATION. IF THE MANUAL IS AN INACCESSIBLE LOCATION, CONTRACTOR TO PROVIDE CABLE OPERATED DAMPER (COD) FOR HIGH CEILINGS AND ALL DRYWALL CEILING LOCATIONS. DAMPERS SHALL BE INDICATED ON SHOP DRAWINGS FOR COORDINATION AND APPROVAL.
12. ALL LOW VOLTAGE CONDUIT SHALL BE CONCEALED ABOVE CEILING AND WITHIN WALLS

KEY PLAN

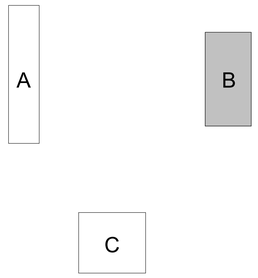

IDENTIFICATION STAMP
DIV. OF THE STATE ARCHITECT
APP: 02-119490 INC:
REVIEWED FOR
SS ☑ FLS ☑ ACS ☑
DATE: 09/13/2022

LPA

ARCHITECTURE ENGINEERING INTERIORS
LANDSCAPE ARCHITECTURE PLANNING

916-287-2400 Office

916-287-2401 Fax

LPADesignStudios.com

431 I Street,
Suite 107
Sacramento, California 95814

REGISTERED PROFESSIONAL ENGINEER
CHRISTOPHER D. TANG
M32973
12/31/2022
MECHANICAL
STATE OF CALIFORNIA

This document and all other project documents, ideas, aesthetics and designs incorporated therein are instruments of service. All project documents are copyright protected, are the property of LPA, Inc. (LPA) and cannot be lawfully used in whole or in part for any project or purpose except as set forth in the contractual agreement between LPA and its Client. The unauthorized disclosure and/or use of the project documents (including the creation of derivative works), may give rise to liability for copyright infringement, unlawful disclosure, use or misappropriation of property rights held by LPA. The unauthorized use of the project documents will give rise to the recovery of monetary losses and damages including attorney fees and costs for which the unauthorized user will be held liable.
Project documents describe the design intent of the work and are not a representation of as-built or existing conditions. LPA is not responsible for any discrepancies between the project documents and the existing conditions.

© LPA, Inc.

DAVIS SR HIGH SCHOOL
AQUATICS CENTER
315 W 14TH ST., DAVIS, CA 95616

Developed for
DAVIS JOINT UNIFIED SCHOOL DISTRICT

Revision	Date

Submittal	Date
50% DD REVIEW	06/15/2021
100% DD SUBMITTAL	07/26/2021
50% CD REVIEW	10/08/2021
100% CD DSA SUBMITTAL	10/22/2021
DSA SUBMITTAL	03/24/2022

Job Number	1904413
Date Published	03/24/2022
Checked By	LPA
Scale	1/8" = 1'-0"

MECHANICAL - POOL MECHANICAL BUILDING ROOF PLAN

M2.31

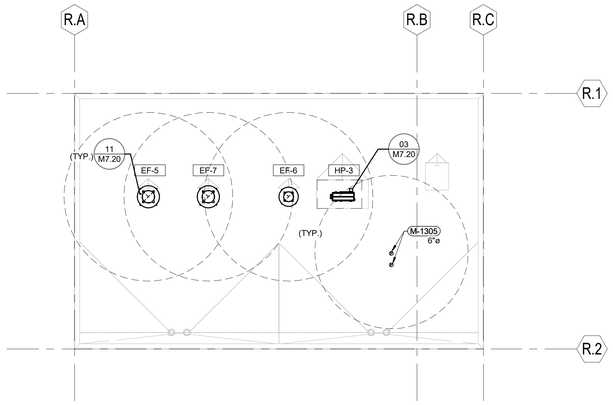

R - MECHANICAL - POOL RESTROOM BUILDING ROOF PLAN | 1/8" = 1'-0" | 05

KEYNOTES

ITEM	DESCRIPTION
M-1305	EXHAUST AIR DUCT DOWN THRU ROOF

LEGEND

- METAL STUD WALL CONSTRUCTION
- 1 HOUR RATED MASONRY WALL CONSTRUCTION
- 1 HOUR RATED MASONRY WALL CONSTRUCTION
- MASONRY WALL CONSTRUCTION

PLAN NOTES

1. PROVIDE ACCESS PANELS IN NON-ACCESSIBLE AREAS (RATED OR NON-RATED) MINIMUM 12"X12" SIZE FOR COMBINATION FIRE/SMOKE DAMPERS. INSTALL LARGER ACCESS PANELS FOR LARGER EQUIPMENT AS REQUIRED BY CODE. COORDINATE WITH ARCHITECT FOR APPROVAL OF FINAL LOCATIONS PRIOR TO INSTALLATION.
2. PROVIDE FIRESTOPPING AT PASS THROUGH DUCT PENETRATIONS THROUGH RATED WALLS. DUCTWORK SHALL BE A MINIMUM 26 GA SHEET METAL. COORDINATE WITH OTHER TRADES THAT MAY HAVE PENETRANTS AROUND THE SAME AREA. REFER TO ARCHITECTURAL SHEETS FOR RATING ASSEMBLIES.
3. INSULATION MATERIALS APPLIED TO DUCTWORK SHALL HAVE A FLAME SPREAD INDEX OF NOT MORE THAN 25 AND SMOKE DENSITY NOT EXCEEDING 50.
4. REQUIRED OFFSETS, COMPONENTS, ACCESSORIES, AND FITTINGS MAY NOT BE SHOWN BUT SHALL BE PROVIDED AS REQUIRED TO AVOID INTERFERENCES WITH UNFORESEEN COMPONENTS.
5. PROVIDE DIELECTRIC UNIONS, GASKETS, AND FASTENERS AT DISSIMILAR METAL CONNECTIONS OF CONTACT POINTS.
6. REFER TO PLUMBING DRAWINGS FOR CONDENSATE DRAIN PIPE ROUTING.
7. MAINTAIN A 3'-0" DISTANCE FROM ENVIRONMENTAL EXHAUST OUTLETS (AS DEFINED IN CMC 502.2.1) TO BUILD OPENINGS AND 10'-0" DISTANCE TO MECHANICALLY FORCED AIR INLET.
8. DUCT SIZE INDICATED ON PLANS ARE THE "FREE AREA" INSIDE DIMENSIONS OF THE DUCT. INCREASE THE SIZE OF THE DUCT TO ACCOMMODATE ACOUSTICAL SILENCERS AND/OR DUCT LINERS. FOR EXAMPLE, A DUCT SIZE SHOWN AS 12" X12" WITH 2" LINER SHALL BE SUPPLIED WITH A 16"X16" DUCT.
9. ROOF SUPPORTS SHALL BE POSITIVELY ATTACHED TO THE ROOF STRUCTURE.
10. INSTALL DUCT SYSTEMS IN THE FOLLOWING ORDER FROM LOWEST TO HIGHEST REFERENCED FROM THE FINISHED CEILING HEIGHT:
    - SUPPLY DUCT
    - RETURN/RELIEF DUCT
    - EXHAUST DUCT
11. PROVIDE MANUAL SHEET METAL VOLUME DAMPER PRIOR TO EACH SUPPLY DIFFUSER/REGISTER AT THE BRANCH DUCT LOCATION. IF THE MANUAL IS AN INACCESSIBLE LOCATION, CONTRACTOR TO PROVIDE CABLE OPERATED DAMPER (COD) FOR HIGH CEILINGS AND ALL DRYWALL CEILING LOCATIONS. DAMPERS SHALL BE INDICATED ON SHOP DRAWINGS FOR COORDINATION AND APPROVAL.
12. ALL LOW VOLTAGE CONDUIT SHALL BE CONCEALED ABOVE CEILING AND WITHIN WALLS

KEY PLAN

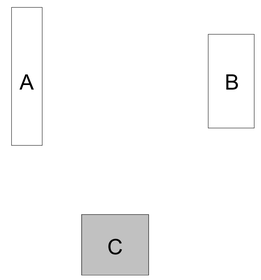

IDENTIFICATION STAMP
DIV. OF THE STATE ARCHITECT
APP: 02-119490 INC:
REVIEWED FOR
SS ☑ FLS ☑ ACS ☑
DATE: 09/13/2022

LPA
ARCHITECTURE ENGINEERING INTERIORS
LANDSCAPE ARCHITECTURE PLANNING

916-287-2400 Office

916-287-2401 Fax

LPADesignStudios.com

431 I Street,
Suite 107
Sacramento, California 95814

REGISTERED PROFESSIONAL ENGINEER
CHRISTOPHER D. TANG
M32973
12/31/2022
MECHANICAL
STATE OF CALIFORNIA

This document and all other project documents, ideas, aesthetics and designs incorporated therein are instruments of service. All project documents are copyright protected, are the property of LPA, Inc. (LPA) and cannot be lawfully used in whole or in part for any project or purpose except as set forth in the contractual agreement between LPA and its Client. The unauthorized disclosure and/or use of the project documents (including the creation of derivative works), may give rise to liability for copyright infringement, unlawful disclosure, use or misappropriation of property rights held by LPA. The unauthorized use of the project documents will give rise to the recovery of monetary losses and damages including attorney fees and costs for which the unauthorized user will be held liable.
Project documents describe the design intent of the work and are not a representation of as-built or existing conditions. LPA is not responsible for any discrepancies between the project documents and the existing conditions.

© LPA, Inc.

DAVIS SR HIGH SCHOOL
AQUATICS CENTER
315 W 14TH ST., DAVIS, CA 95616

Developed for
DAVIS JOINT UNIFIED SCHOOL DISTRICT

Revision	Date

Submittal	Date
50% DD REVIEW	06/15/2021
100% DD SUBMITTAL	07/26/2021
50% CD REVIEW	10/08/2021
100% CD DSA SUBMITTAL	10/22/2021
DSA SUBMITTAL	03/24/2022

Job Number	1904413
Date Published	03/24/2022
Checked By	LPA
Scale	1/8" = 1'-0"

MECHANICAL - POOL RESTROOM BUILDING ROOF PLAN

M2.32

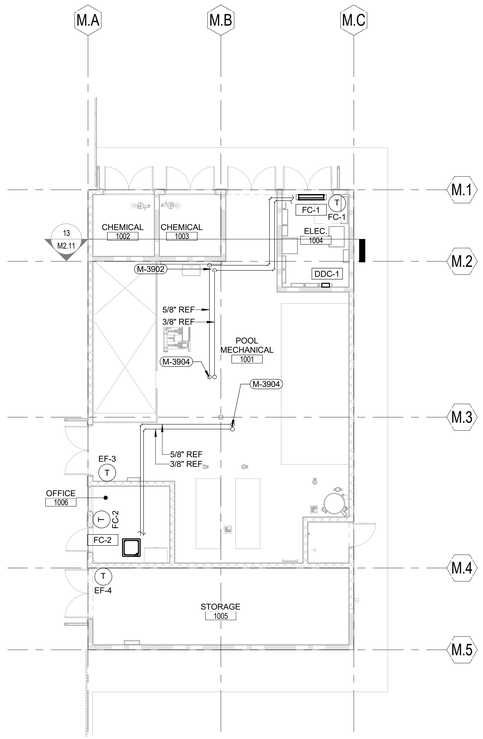

1 - PIPING & CONTROLS - POOL MECHANICAL BUILDING FLOOR PLAN | 1/8" = 1'-0" | 05

KEYNOTES

ITEM	DESCRIPTION
M-3902	INSULATED REFRIGERANT PIPING LIQUID AND SUCTION LINES DOWN
M-3904	INSULATED REFRIGERANT PIPING LIQUID AND SUCTION LINES UP THRU ROOF

LEGEND

- METAL STUD WALL CONSTRUCTION
- 1 HOUR RATED METAL STUD WALL CONSTRUCTION
- 1 HOUR RATED METAL STUD WALL CONSTRUCTION
- MASONRY WALL CONSTRUCTION

PLAN NOTES

1. PROVIDE ACCESS PANELS IN NON-ACCESSIBLE AREAS (RATED OR NON-RATED) MINIMUM 12"X12" SIZE FOR COMBINATION FIRE/SMOKE DAMPERS. INSTALL LARGER ACCESS PANELS FOR LARGER EQUIPMENT AS REQUIRED BY CODE. COORDINATE WITH ARCHITECT FOR APPROVAL OF FINAL LOCATIONS PRIOR TO INSTALLATION.
2. PROVIDE FIRESTOPPING AT PASS THROUGH DUCT PENETRATIONS THROUGH RATED WALLS. DUCTWORK SHALL BE A MINIMUM 26 GA SHEET METAL. COORDINATE WITH OTHER TRADES THAT MAY HAVE PENETRANTS AROUND THE SAME AREA. REFER TO ARCHITECTURAL SHEETS FOR RATING ASSEMBLIES.
3. INSULATION MATERIALS APPLIED TO DUCTWORK SHALL HAVE A FLAME SPREAD INDEX OF NOT MORE THAN 25 AND SMOKE DENSITY NOT EXCEEDING 50.
4. REQUIRED OFFSETS, COMPONENTS, ACCESSORIES, AND FITTINGS MAY NOT BE SHOWN BUT SHALL BE PROVIDED AS REQUIRED TO AVOID INTERFERENCES WITH UNFORESEEN COMPONENTS.
5. PROVIDE DIELECTRIC UNIONS, GASKETS, AND FASTENERS AT DISSIMILAR METAL CONNECTIONS OF CONTACT POINTS.
6. REFER TO PLUMBING DRAWINGS FOR CONDENSATE DRAIN PIPE ROUTING.
7. MAINTAIN A 3'-0" DISTANCE FROM ENVIRONMENTAL EXHAUST OUTLETS (AS DEFINED IN CMC 502.2.1) TO BUILD OPENINGS AND 10'-0" DISTANCE TO MECHANICALLY FORCED AIR INLET.
8. DUCT SIZE INDICATED ON PLANS ARE THE "FREE AREA" INSIDE DIMENSIONS OF THE DUCT. INCREASE THE SIZE OF THE DUCT TO ACCOMMODATE ACOUSTICAL SILENCERS AND/OR DUCT LINERS. FOR EXAMPLE, A DUCT SIZE SHOWN AS 12" X12" WITH 2" LINER SHALL BE SUPPLIED WITH A 16"X16" DUCT.
9. ROOF SUPPORTS SHALL BE POSITIVELY ATTACHED TO THE ROOF STRUCTURE.
10. INSTALL DUCT SYSTEMS IN THE FOLLOWING ORDER FROM LOWEST TO HIGHEST REFERENCED FROM THE FINISHED CEILING HEIGHT:
    - SUPPLY DUCT
    - RETURN/RELIEF DUCT
    - EXHAUST DUCT
11. PROVIDE MANUAL SHEET METAL VOLUME DAMPER PRIOR TO EACH SUPPLY DIFFUSER/REGISTER AT THE BRANCH DUCT LOCATION. IF THE MANUAL IS AN INACCESSIBLE LOCATION, CONTRACTOR TO PROVIDE CABLE OPERATED DAMPER (COD) FOR HIGH CEILINGS AND ALL DRYWALL CEILING LOCATIONS. DAMPERS SHALL BE INDICATED ON SHOP DRAWINGS FOR COORDINATION AND APPROVAL.
12. ALL LOW VOLTAGE CONDUIT SHALL BE CONCEALED ABOVE CEILING AND WITHIN WALLS

KEY PLAN

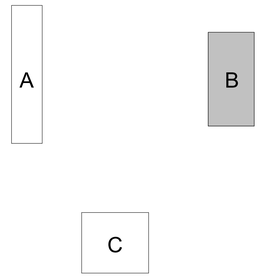

IDENTIFICATION STAMP
DIV. OF THE STATE ARCHITECT
APP: 02-119490 INC:
REVIEWED FOR
SS ☑ FLS ☑ ACS ☑
DATE: 09/13/2022

LPA
ARCHITECTURE ENGINEERING INTERIORS
LANDSCAPE ARCHITECTURE PLANNING

916-287-2400 Office

916-287-2401 Fax

LPADesignStudios.com

431 I Street,
Suite 107
Sacramento, California 95814

REGISTERED PROFESSIONAL ENGINEER
CHRISTOPHER D. TANG
M32973
12/31/2022
MECHANICAL
STATE OF CALIFORNIA

This document and all other project documents, ideas, aesthetics and designs incorporated therein are instruments of service. All project documents are copyright protected, are the property of LPA, Inc. (LPA) and cannot be lawfully used in whole or in part for any project or purpose except as set forth in the contractual agreement between LPA and its Client. The unauthorized disclosure and/or use of the project documents (including the creation of derivative works), may give rise to liability for copyright infringement, unlawful disclosure, use or misappropriation of property rights held by LPA. The unauthorized use of the project documents will give rise to the recovery of monetary losses and damages including attorney fees and costs for which the unauthorized user will be held liable.
Project documents describe the design intent of the work and are not a representation of as-built or existing conditions. LPA is not responsible for any discrepancies between the project documents and the existing conditions.

© LPA, Inc.

DAVIS SR HIGH SCHOOL
AQUATICS CENTER
315 W 14TH ST., DAVIS, CA 95616

Developed for
DAVIS JOINT UNIFIED SCHOOL DISTRICT

Revision	Date

Submittal	Date
50% DD REVIEW	06/15/2021
100% DD SUBMITTAL	07/26/2021
50% CD REVIEW	10/08/2021
100% CD DSA SUBMITTAL	10/22/2021
DSA SUBMITTAL	02/24/2022

Job Number	1904413
Date Published	03/24/2022
Checked By	LPA
Scale	1/8" = 1'-0"

PIPING & CONTROLS - POOL MECHANICAL BUILDING FLOOR PLAN

M3.11

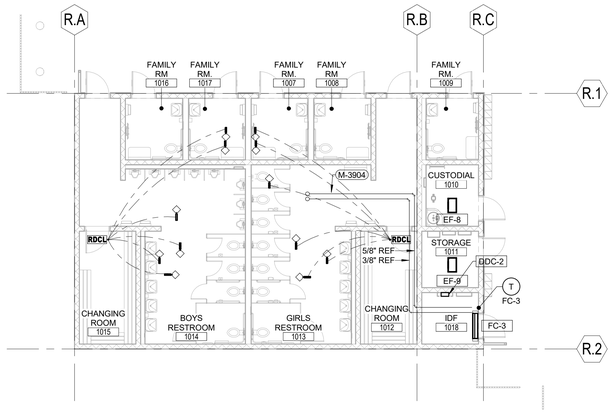

1 - PIPING & CONTROLS - POOL RESTROOM BUILDING FLOOR PLAN | 1/8" = 1'-0" | 05

KEYNOTES

ITEM	DESCRIPTION
M-3904	INSULATED REFRIGERANT PIPING LIQUID AND SUCTION LINES UP THRU ROOF

IDENTIFICATION STAMP
DIV. OF THE STATE ARCHITECT
APP: 02-119490 INC:
REVIEWED FOR
SS ☑ FLS ☑ ACS ☑
DATE: 09/13/2022

LEGEND

- METAL STUD WALL CONSTRUCTION
- 1 HOUR RATED METAL STUD WALL CONSTRUCTION
- 1 HOUR RATED METAL STUD WALL CONSTRUCTION
- MASONRY WALL CONSTRUCTION

PLAN NOTES

1. PROVIDE ACCESS PANELS IN NON-ACCESSIBLE AREAS (RATED OR NON-RATED) MINIMUM 12"X12" SIZE FOR COMBINATION FIRE/SMOKE DAMPERS. INSTALL LARGER ACCESS PANELS FOR LARGER EQUIPMENT AS REQUIRED BY CODE. COORDINATE WITH ARCHITECT FOR APPROVAL OF FINAL LOCATIONS PRIOR TO INSTALLATION.
2. PROVIDE FIRESTOPPING AT PASS THROUGH DUCT PENETRATIONS THROUGH RATED WALLS. DUCTWORK SHALL BE A MINIMUM 26 GA SHEET METAL. COORDINATE WITH OTHER TRADES THAT MAY HAVE PENETRANTS AROUND THE SAME AREA. REFER TO ARCHITECTURAL SHEETS FOR RATING ASSEMBLIES.
3. INSULATION MATERIALS APPLIED TO DUCTWORK SHALL HAVE A FLAME SPREAD INDEX OF NOT MORE THAN 25 AND SMOKE DENSITY NOT EXCEEDING 50.
4. REQUIRED OFFSETS, COMPONENTS, ACCESSORIES, AND FITTINGS MAY NOT BE SHOWN BUT SHALL BE PROVIDED AS REQUIRED TO AVOID INTERFERENCES WITH UNFORESEEN COMPONENTS.
5. PROVIDE DIELECTRIC UNIONS, GASKETS, AND FASTENERS AT DISSIMILAR METAL CONNECTIONS OF CONTACT POINTS.
6. REFER TO PLUMBING DRAWINGS FOR CONDENSATE DRAIN PIPE ROUTING.
7. MAINTAIN A 3'-0" DISTANCE FROM ENVIRONMENTAL EXHAUST OUTLETS (AS DEFINED IN CMC 502.2.1) TO BUILD OPENINGS AND 10'-0" DISTANCE TO MECHANICALLY FORCED AIR INLET.
8. DUCT SIZE INDICATED ON PLANS ARE THE "FREE AREA" INSIDE DIMENSIONS OF THE DUCT. INCREASE THE SIZE OF THE DUCT TO ACCOMMODATE ACOUSTICAL SILENCERS AND/OR DUCT LINERS. FOR EXAMPLE, A DUCT SIZE SHOWN AS 12" X12" WITH 2" LINER SHALL BE SUPPLIED WITH A 16"X16" DUCT.
9. ROOF SUPPORTS SHALL BE POSITIVELY ATTACHED TO THE ROOF STRUCTURE.
10. INSTALL DUCT SYSTEMS IN THE FOLLOWING ORDER FROM LOWEST TO HIGHEST REFERENCED FROM THE FINISHED CEILING HEIGHT:
    - SUPPLY DUCT
    - RETURN/RELIEF DUCT
    - EXHAUST DUCT
11. PROVIDE MANUAL SHEET METAL VOLUME DAMPER PRIOR TO EACH SUPPLY DIFFUSER/REGISTER AT THE BRANCH DUCT LOCATION. IF THE MANUAL IS AN INACCESSIBLE LOCATION, CONTRACTOR TO PROVIDE CABLE OPERATED DAMPER (COD) FOR HIGH CEILINGS AND ALL DRYWALL CEILING LOCATIONS. DAMPERS SHALL BE INDICATED ON SHOP DRAWINGS FOR COORDINATION AND APPROVAL.
12. ALL LOW VOLTAGE CONDUIT SHALL BE CONCEALED ABOVE CEILING AND WITHIN WALLS

KEY PLAN

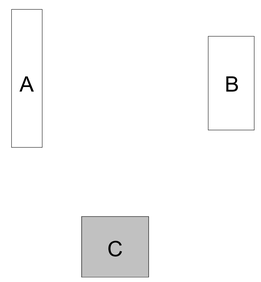

LPA
ARCHITECTURE ENGINEERING INTERIORS
LANDSCAPE ARCHITECTURE PLANNING

916-287-2400 Office
916-287-2401 Fax
LPADesignStudios.com
431 I Street,
Suite 107
Sacramento, California 95814

REGISTERED PROFESSIONAL ENGINEER
CHRISTOPHER D. TANG
M32973
12/31/2022
MECHANICAL
STATE OF CALIFORNIA

This document and all other project documents, ideas, aesthetics and designs incorporated therein are instruments of service. All project documents are copyright protected, are the property of LPA, Inc. (LPA) and cannot be lawfully used in whole or in part for any project or purpose except as set forth in the contractual agreement between LPA and its Client. The unauthorized disclosure and/or use of the project documents (including the creation of derivative works), may give rise to liability for copyright infringement, unlawful disclosure, use or misappropriation of property rights held by LPA. The unauthorized use of the project documents will give rise to the recovery of monetary losses and damages including attorney fees and costs for which the unauthorized user will be held liable.
Project documents describe the design intent of the work and are not a representation of as-built or existing conditions. LPA is not responsible for any discrepancies between the project documents and the existing conditions.

© LPA, Inc.

DAVIS SR HIGH SCHOOL
AQUATICS CENTER
315 W 14TH ST., DAVIS, CA 95616

Developed for
DAVIS JOINT UNIFIED SCHOOL DISTRICT

Revision	Date

Submittal	Date
50% DD REVIEW	06/15/2021
100% DD SUBMITTAL	07/26/2021
50% CD REVIEW	10/08/2021
100% CD DSA SUBMITTAL	10/22/2021
DSA SUBMITTAL	03/24/2022

Job Number	1904413
Date Published	03/24/2022
Checked By	LPA
Scale	1/8" = 1'-0"

PIPING & CONTROLS - POOL RESTROOM BUILDING FLOOR PLAN

M3.12

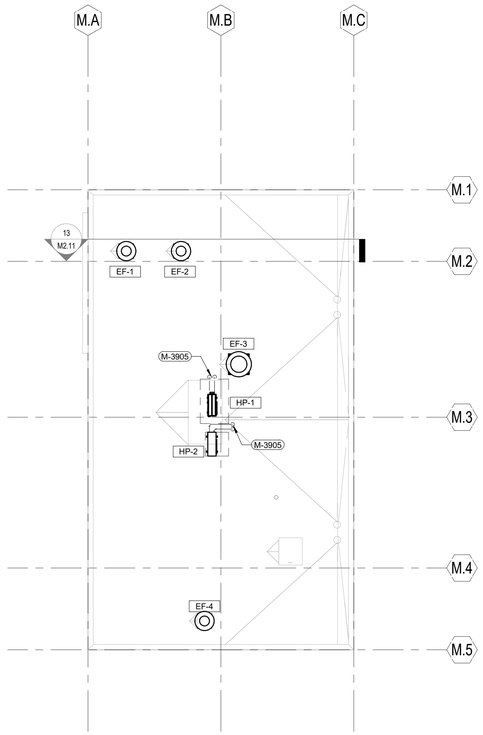

R - PIPING & CONTROLS - POOL MECHANICAL BUILDING ROOF PLAN | 1/8" = 1'-0" | 05

KEYNOTES

ITEM	DESCRIPTION
M-3905	INSULATED REFRIGERANT PIPING LIQUID AND SUCTION LINES DOWN THRU ROOF

IDENTIFICATION STAMP
DIV. OF THE STATE ARCHITECT
APP: 02-119490 INC:
REVIEWED FOR
SS ☑ FLS ☑ ACS ☑
DATE: 09/13/2022

LEGEND

- METAL STUD WALL CONSTRUCTION
- 1 HOUR RATED METAL STUD WALL CONSTRUCTION
- 1 HOUR RATED METAL STUD WALL CONSTRUCTION
- MASONRY WALL CONSTRUCTION

PLAN NOTES

1. PROVIDE ACCESS PANELS IN NON-ACCESSIBLE AREAS (RATED OR NON-RATED) MINIMUM 12"X12" SIZE FOR COMBINATION FIRE/SMOKE DAMPERS. INSTALL LARGER ACCESS PANELS FOR LARGER EQUIPMENT AS REQUIRED BY CODE. COORDINATE WITH ARCHITECT FOR APPROVAL OF FINAL LOCATIONS PRIOR TO INSTALLATION.
2. PROVIDE FIRESTOPPING AT PASS THROUGH DUCT PENETRATIONS THROUGH RATED WALLS. DUCTWORK SHALL BE A MINIMUM 26 GA SHEET METAL. COORDINATE WITH OTHER TRADES THAT MAY HAVE PENETRANTS AROUND THE SAME AREA. REFER TO ARCHITECTURAL SHEETS FOR RATING ASSEMBLIES.
3. INSULATION MATERIALS APPLIED TO DUCTWORK SHALL HAVE A FLAME SPREAD INDEX OF NOT MORE THAN 25 AND SMOKE DENSITY NOT EXCEEDING 50.
4. REQUIRED OFFSETS, COMPONENTS, ACCESSORIES, AND FITTINGS MAY NOT BE SHOWN BUT SHALL BE PROVIDED AS REQUIRED TO AVOID INTERFERENCES WITH UNFORESEEN COMPONENTS.
5. PROVIDE DIELECTRIC UNIONS, GASKETS, AND FASTENERS AT DISSIMILAR METAL CONNECTIONS OF CONTACT POINTS.
6. REFER TO PLUMBING DRAWINGS FOR CONDENSATE DRAIN PIPE ROUTING.
7. MAINTAIN A 3'-0" DISTANCE FROM ENVIRONMENTAL EXHAUST OUTLETS (AS DEFINED IN CMC 502.2.1) TO BUILD OPENINGS AND 10'-0" DISTANCE TO MECHANICALLY FORCED AIR INLET.
8. DUCT SIZE INDICATED ON PLANS ARE THE "FREE AREA" INSIDE DIMENSIONS OF THE DUCT. INCREASE THE SIZE OF THE DUCT TO ACCOMMODATE ACOUSTICAL SILENCERS AND/OR DUCT LINERS. FOR EXAMPLE, A DUCT SIZE SHOWN AS 12" X12" WITH 2" LINER SHALL BE SUPPLIED WITH A 16"X16" DUCT.
9. ROOF SUPPORTS SHALL BE POSITIVELY ATTACHED TO THE ROOF STRUCTURE.
10. INSTALL DUCT SYSTEMS IN THE FOLLOWING ORDER FROM LOWEST TO HIGHEST REFERENCED FROM THE FINISHED CEILING HEIGHT:
    - SUPPLY DUCT
    - RETURN/RELIEF DUCT
    - EXHAUST DUCT
11. PROVIDE MANUAL SHEET METAL VOLUME DAMPER PRIOR TO EACH SUPPLY DIFFUSER/REGISTER AT THE BRANCH DUCT LOCATION. IF THE MANUAL IS AN INACCESSIBLE LOCATION, CONTRACTOR TO PROVIDE CABLE OPERATED DAMPER (COD) FOR HIGH CEILINGS AND ALL DRYWALL CEILING LOCATIONS. DAMPERS SHALL BE INDICATED ON SHOP DRAWINGS FOR COORDINATION AND APPROVAL.
12. ALL LOW VOLTAGE CONDUIT SHALL BE CONCEALED ABOVE CEILING AND WITHIN WALLS

KEY PLAN

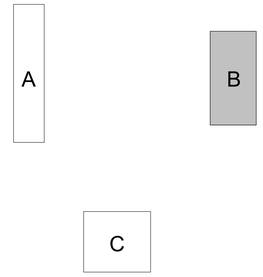

LPA
ARCHITECTURE ENGINEERING INTERIORS
LANDSCAPE ARCHITECTURE PLANNING

916-287-2400 Office
916-287-2401 Fax
LPADesignStudios.com
431 I Street,
Suite 107
Sacramento, California 95814

REGISTERED PROFESSIONAL ENGINEER
CHRISTOPHER D. TANG
M32973
12/31/2022
MECHANICAL
STATE OF CALIFORNIA

This document and all other project documents, ideas, aesthetics and designs incorporated therein are instruments of service. All project documents are copyright protected, are the property of LPA, Inc. (LPA) and cannot be lawfully used in whole or in part for any project or purpose except as set forth in the contractual agreement between LPA and its Client. The unauthorized disclosure and/or use of the project documents (including the creation of derivative works), may give rise to liability for copyright infringement, unlawful disclosure, use or misappropriation of property rights held by LPA. The unauthorized use of the project documents will give rise to the recovery of monetary losses and damages including attorney fees and costs for which the unauthorized user will be held liable.
Project documents describe the design intent of the work and are not a representation of as-built or existing conditions. LPA is not responsible for any discrepancies between the project documents and the existing conditions.

© LPA, Inc.

DAVIS SR HIGH SCHOOL
AQUATICS CENTER
315 W 14TH ST., DAVIS, CA 95616

Developed for
DAVIS JOINT UNIFIED SCHOOL DISTRICT

Revision	Date

Submittal	Date
50% DD REVIEW	06/15/2021
100% DD SUBMITTAL	07/26/2021
50% CD REVIEW	10/08/2021
100% CD DSA SUBMITTAL	10/22/2021
DSA SUBMITTAL	02/24/2022

Job Number	1904413
Date Published	03/24/2022
Checked By	LPA
Scale	1/8" = 1'-0"

PIPING & CONTROLS - POOL MECHANICAL BUILDING ROOF PLAN

M3.31

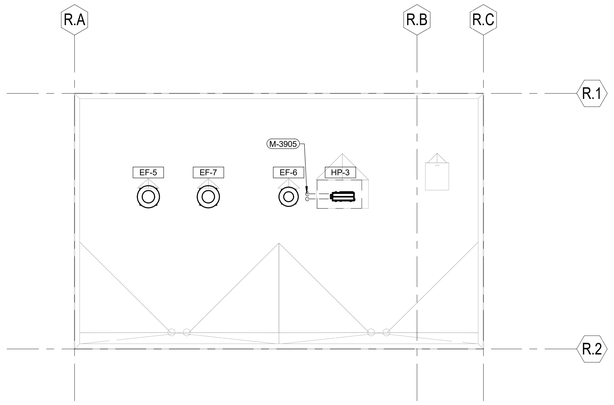

R - PIPING & CONTROLS - POOL RESTROOM BUILDING ROOF PLAN | 1/8" = 1'-0" | 05

KEYNOTES

ITEM	DESCRIPTION
M-3905	INSULATED REFRIGERANT PIPING LIQUID AND SUCTION LINES DOWN THRU ROOF

IDENTIFICATION STAMP
DIV. OF THE STATE ARCHITECT
APP: 02-119490 INC:
REVIEWED FOR
SS ☑ FLS ☑ ACS ☑
DATE: 09/13/2022

LEGEND

- METAL STUD WALL CONSTRUCTION
- 1 HOUR RATED METAL STUD WALL CONSTRUCTION
- 1 HOUR RATED METAL STUD WALL CONSTRUCTION
- MASONRY WALL CONSTRUCTION

PLAN NOTES

1. PROVIDE ACCESS PANELS IN NON-ACCESSIBLE AREAS (RATED OR NON-RATED) MINIMUM 12"X12" SIZE FOR COMBINATION FIRE/SMOKE DAMPERS. INSTALL LARGER ACCESS PANELS FOR LARGER EQUIPMENT AS REQUIRED BY CODE. COORDINATE WITH ARCHITECT FOR APPROVAL OF FINAL LOCATIONS PRIOR TO INSTALLATION.
2. PROVIDE FIRESTOPPING AT PASS THROUGH DUCT PENETRATIONS THROUGH RATED WALLS. DUCTWORK SHALL BE A MINIMUM 26 GA SHEET METAL. COORDINATE WITH OTHER TRADES THAT MAY HAVE PENETRANTS AROUND THE SAME AREA. REFER TO ARCHITECTURAL SHEETS FOR RATING ASSEMBLIES.
3. INSULATION MATERIALS APPLIED TO DUCTWORK SHALL HAVE A FLAME SPREAD INDEX OF NOT MORE THAN 25 AND SMOKE DENSITY NOT EXCEEDING 50.
4. REQUIRED OFFSETS, COMPONENTS, ACCESSORIES, AND FITTINGS MAY NOT BE SHOWN BUT SHALL BE PROVIDED AS REQUIRED TO AVOID INTERFERENCES WITH UNFORESEEN COMPONENTS.
5. PROVIDE DIELECTRIC UNIONS, GASKETS, AND FASTENERS AT DISSIMILAR METAL CONNECTIONS OF CONTACT POINTS.
6. REFER TO PLUMBING DRAWINGS FOR CONDENSATE DRAIN PIPE ROUTING.
7. MAINTAIN A 3'-0" DISTANCE FROM ENVIRONMENTAL EXHAUST OUTLETS (AS DEFINED IN CMC 502.2.1) TO BUILD OPENINGS AND 10'-0" DISTANCE TO MECHANICALLY FORCED AIR INLET.
8. DUCT SIZE INDICATED ON PLANS ARE THE "FREE AREA" INSIDE DIMENSIONS OF THE DUCT. INCREASE THE SIZE OF THE DUCT TO ACCOMMODATE ACOUSTICAL SILENCERS AND/OR DUCT LINERS. FOR EXAMPLE, A DUCT SIZE SHOWN AS 12" X12" WITH 2" LINER SHALL BE SUPPLIED WITH A 16"X16" DUCT.
9. ROOF SUPPORTS SHALL BE POSITIVELY ATTACHED TO THE ROOF STRUCTURE.
10. INSTALL DUCT SYSTEMS IN THE FOLLOWING ORDER FROM LOWEST TO HIGHEST REFERENCED FROM THE FINISHED CEILING HEIGHT:
    - SUPPLY DUCT
    - RETURN/RELIEF DUCT
    - EXHAUST DUCT
11. PROVIDE MANUAL SHEET METAL VOLUME DAMPER PRIOR TO EACH SUPPLY DIFFUSER/REGISTER AT THE BRANCH DUCT LOCATION. IF THE MANUAL IS AN INACCESSIBLE LOCATION, CONTRACTOR TO PROVIDE CABLE OPERATED DAMPER (COD) FOR HIGH CEILINGS AND ALL DRYWALL CEILING LOCATIONS. DAMPERS SHALL BE INDICATED ON SHOP DRAWINGS FOR COORDINATION AND APPROVAL.
12. ALL LOW VOLTAGE CONDUIT SHALL BE CONCEALED ABOVE CEILING AND WITHIN WALLS

KEY PLAN

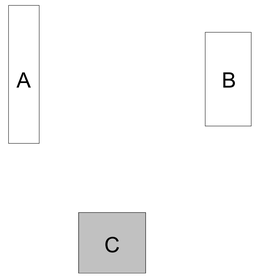

LPA

ARCHITECTURE ENGINEERING INTERIORS
LANDSCAPE ARCHITECTURE PLANNING

916-287-2400 Office

916-287-2401 Fax

LPADesignStudios.com

431 I Street,
Suite 107
Sacramento, California 95814

REGISTERED PROFESSIONAL ENGINEER
CHRISTOPHER D. TANG
M32973
12/31/2022
MECHANICAL
STATE OF CALIFORNIA

This document and all other project documents, ideas, aesthetics and designs incorporated therein are instruments of service. All project documents are copyright protected, are the property of LPA, Inc. (LPA) and cannot be lawfully used in whole or in part for any project or purpose except as set forth in the contractual agreement between LPA and its Client. The unauthorized disclosure and/or use of the project documents (including the creation of derivative works), may give rise to liability for copyright infringement, unlawful disclosure, use or misappropriation of property rights held by LPA. The unauthorized use of the project documents will give rise to the recovery of monetary losses and damages including attorney fees and costs for which the unauthorized user will be held liable.
Project documents describe the design intent of the work and are not a representation of as-built or existing conditions. LPA is not responsible for any discrepancies between the project documents and the existing conditions.

© LPA, Inc.

DAVIS SR HIGH SCHOOL
AQUATICS CENTER
315 W 14TH ST., DAVIS, CA 95616

Developed for
DAVIS JOINT UNIFIED SCHOOL DISTRICT

Revision	Date

Submittal	Date
50% DD REVIEW	06/15/2021
100% DD SUBMITTAL	07/26/2021
50% CD REVIEW	10/08/2021
100% CD DSA SUBMITTAL	10/22/2021
DSA SUBMITTAL	03/24/2022

Job Number	1904413
Date Published	03/24/2022
Checked By	LPA
Scale	1/8" = 1'-0"

PIPING & CONTROLS - POOL RESTROOM BUILDING ROOF PLAN

M3.32

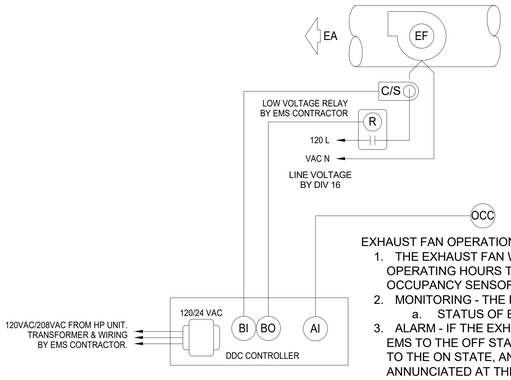

EXHAUST FAN OPERATION

1. THE EXHAUST FAN WILL OPERATE DURING NORMAL BUILDING OPERATING HOURS THROUGH NOTIFICATION BY THE EMS OCCUPANCY SENSOR(S) LOCATED IN ZONE.
2. MONITORING - THE FOLLOWING CONDITIONS SHALL BE MONITORED:
   a. STATUS OF EXHAUST FAN.
3. ALARM - IF THE EXHAUST FAN RUNS WHILE COMMANDED BY THE EMS TO THE OFF STATE OR IF IT FAILS TO RUN WHILE COMMANDED TO THE ON STATE, AN ALARM SHALL BE DISPLAYED AND ANNUNCIATED AT THE OPERATOR'S CONSOLE.

EXHAUST FAN CONTROLS FOR 1 PH FAN - OCCUPANCY CONTROLLED | NTS | 16

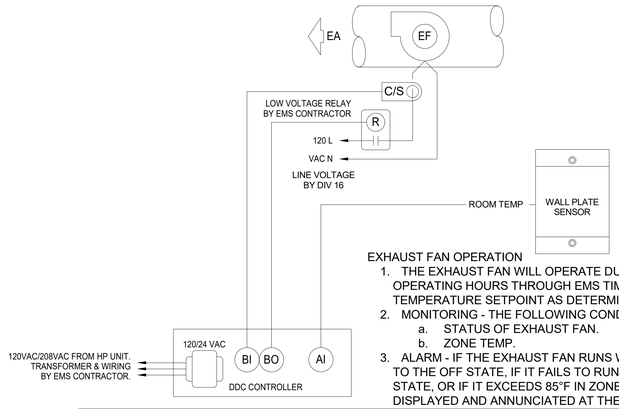

EXHAUST FAN OPERATION

1. THE EXHAUST FAN WILL OPERATE DURING NORMAL BUILDING OPERATING HOURS THROUGH EMS TIMECLOCK TO MAINTAIN TEMPERATURE SETPOINT AS DETERMINED BY DISTRICT.
2. MONITORING - THE FOLLOWING CONDITIONS SHALL BE MONITORED:
   a. STATUS OF EXHAUST FAN.
   b. ZONE TEMP.
3. ALARM - IF THE EXHAUST FAN RUNS WHILE COMMANDED BY THE EMS TO THE OFF STATE, IF IT FAILS TO RUN WHILE COMMANDED TO THE ON STATE, OR IF IT EXCEEDS 85°F IN ZONE AN ALARM SHALL BE DISPLAYED AND ANNUNCIATED AT THE OPERATOR'S CONSOLE.

EXHAUST FAN CONTROLS FOR 1 PH FAN - TEMP CONTROLLED | NTS | 15

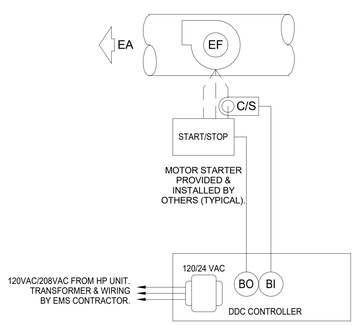

EXHAUST FAN OPERATION

1. THE EXHAUST FAN WILL OPERATE 24/7.
2. MONITORING - THE FOLLOWING CONDITIONS SHALL BE MONITORED:
   a. STATUS OF EXHAUST FAN.
3. ALARM - IF EXHAUST FAN IS OFF, AN ALARM SHALL BE DISPLAYED AND ANNUNCIATED AT THE OPERATOR'S CONSOLE.

EXHAUST FAN CONTROLS FOR 3 PH FAN - 24/7 OPERATION | NTS | 14

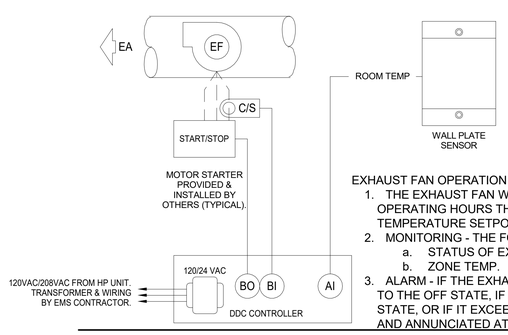

EXHAUST FAN OPERATION

1. THE EXHAUST FAN WILL OPERATE DURING NORMAL BUILDING OPERATING HOURS THROUGH EMS TIMECLOCK TO MAINTAIN TEMPERATURE SETPOINT AS DETERMINED BY DISTRICT.
2. MONITORING - THE FOLLOWING CONDITIONS SHALL BE MONITORED:
   a. STATUS OF EXHAUST FAN.
   b. ZONE TEMP.
3. ALARM - IF THE EXHAUST FAN RUNS WHILE COMMANDED BY THE EMS TO THE OFF STATE, IF IT FAILS TO RUN WHILE COMMANDED TO THE ON STATE, OR IF IT EXCEEDS 85°F IN ZONE AN ALARM SHALL BE DISPLAYED AND ANNUNCIATED AT THE OPERATOR'S CONSOLE.

EXHAUST FAN CONTROLS FOR 3 PH FAN - TEMP CONTROLLED | NTS | 13

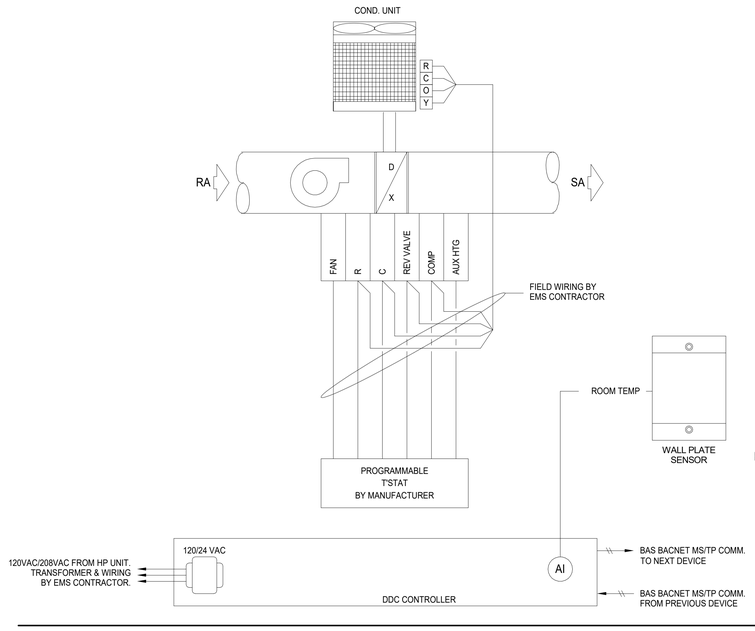

FAN COIL OPERATION

1. THE HEAT PUMP UNIT WILL OPERATE UNDER ITS OWN CONTROLS TO MAINTAIN ROOM TEMPERATURE SETPOINT AS DETERMINED BY WALL MOUNTED PROGRAMMABLE THERMOSTAT.
2. MONITORING - THE FOLLOWING CONDITIONS SHALL BE MONITORED BY THE EMS:
   a. ZONE TEMP.
   b. ALARM - IF THE ZONE TEMP EXCEEDS 80°F (ADJUSTABLE), AN ALARM SHALL BE DISPLAYED AND ANNUNCIATED AT THE OPERATOR'S CONSOLE.

SPLIT SYSTEM HEAT PUMP UNIT | NTS | 03

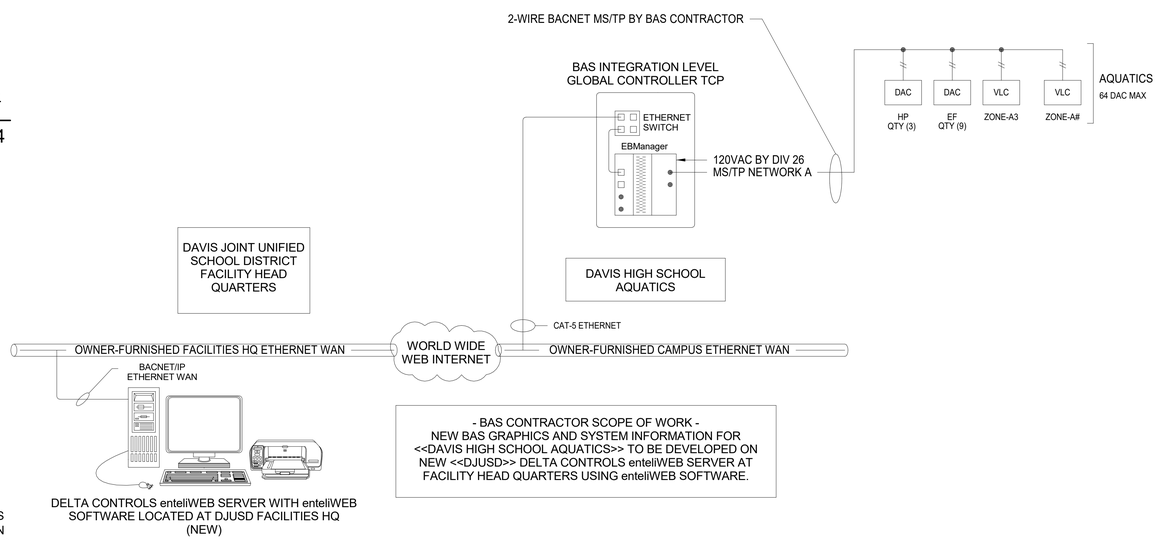

DELTA CONTROLS BACNET BAS SYSTEM - NETWORK ARCHITECTURE | NTS | 01

IDENTIFICATION STAMP
DIV. OF THE STATE ARCHITECT
APP: 02-119490 INC:
REVIEWED FOR
SS ☑ FLS ☑ ACS ☑
DATE: 09/13/2022

LPA
ARCHITECTURE ENGINEERING INTERIORS
LANDSCAPE ARCHITECTURE PLANNING

916-287-2400 Office
916-287-2401 Fax
LPADesignStudios.com
431 I Street,
Suite 107
Sacramento, California 95814

REGISTERED PROFESSIONAL ENGINEER
CHRISTOPHER D. TAYLOR
M32973
12/31/2022
MECHANICAL
STATE OF CALIFORNIA

This document and all other project documents, ideas, aesthetics and designs incorporated therein are instruments of service. All project documents are copyright protected, are the property of LPA, Inc. (LPA) and cannot be lawfully used in whole or in part for any project or purpose except as set forth in the contractual agreement between LPA and its Client. The unauthorized disclosure and/or use of the project documents (including the creation of derivative works), may give rise to liability for copyright infringement, unlawful disclosure, use or misappropriation of property rights held by LPA. The unauthorized use of the project documents will give rise to the recovery of monetary losses and damages including attorney fees and costs for which the unauthorized user will be held liable.
Project documents describe the design intent of the work and are not a representation of as-built or existing conditions. LPA is not responsible for any discrepancies between the project documents and the existing conditions.

© LPA, Inc.

DAVIS SR HIGH SCHOOL
AQUATICS CENTER
315 W 14TH ST., DAVIS, CA 95616

Developed for
DAVIS JOINT UNIFIED SCHOOL DISTRICT

Revision	Date

Submittal	Date
50% DD REVIEW	06/15/2021
100% DD SUBMITTAL	07/26/2021
50% CD REVIEW	10/08/2021
100% CD DSA SUBMITTAL	10/22/2021
DSA SUBMITTAL	03/24/2022

Job Number	1904413
Date Published	03/24/2022
Checked By	LPA
Scale	

MECHANICAL
CONTROL
SEQUENCES AND
DIAGRAMS

M6.10

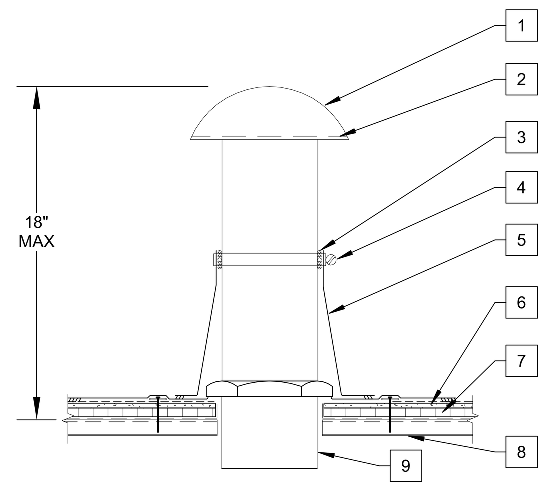

1	304 SS 16 GA ROOF JACK AND RAIN CAP. HEIGHT MINIMUM 18" FROM OPENING TO TOP OF ROOF
2	INSECT SCREEN OVER OPENING
3	SEALANT
4	STAINLESS STEEL HOSE CLAMP
5	FLASHING MEMBRANE
6	ROOFING
7	RIGID INSULATION
8	STRUCTURAL DECK
9	DUCT SIZE PER PLANS. 8"ø MAX DUCT SIZE.

NOTES:
1. SEE ARCHITECTURAL DETAIL 7/A8.21 FOR FLASHING AND WEATHERPROOFING DETAILS.

OSA ROOF PENETRATION — NTS — 20

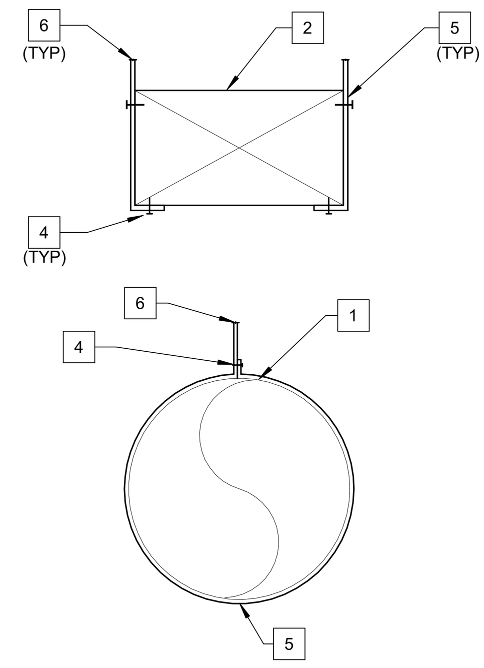

1	ROUND DUCT (MAX CROSS SECTIONAL AREA 6 SQ. FT)
2	RECTANGULAR DUCT (MAX CROSS SECTIONAL AREA 6 SQ. FT)
3	NA
4	(1) #10 SCREW PER SIDE SHEET METAL SCREW
5	1" x 22 GA. METAL STRAP
6	SECURE TO STRUCTURE ABOVE, (SEE NOTE # 1)

NOTE:
1. SEE STRUCTURAL HANGER DETAILS 08 & 19/S6.91 FOR SEISMIC, METAL CHANNEL STRUT FRAMING, CABLE & ROD HANGER DETAILS
2. RODS, TRAPEZE HANGERS, STRAPS, BANDS, ETC. SHALL BE SIZED PER STRUCTURAL DETAILS.
3. PROVIDE STRAP AND SUPPORT 8'-0" O.C..
4. PROVIDE SEISMIC SUPPORT ASAS REQUIRED IF DUCTWORK IS INSTALL ADJACENT TO PIPING, CONDUITS, CABLE TRAYS, OR ANY OTHER PHYSICALLY SIGNIFICANT UTILITIES ON THE SAME PLANE THAT WOULD CAUSE IMPACT DUE TO SWAYING. UTILITIES SHALL BE CONSIDERED ADJACENT IF THEY FALL WITHIN A 45 DEGREE SWAY FROM DUCTWORK.

TYPICAL DUCT SUPPORT — NTS — 12

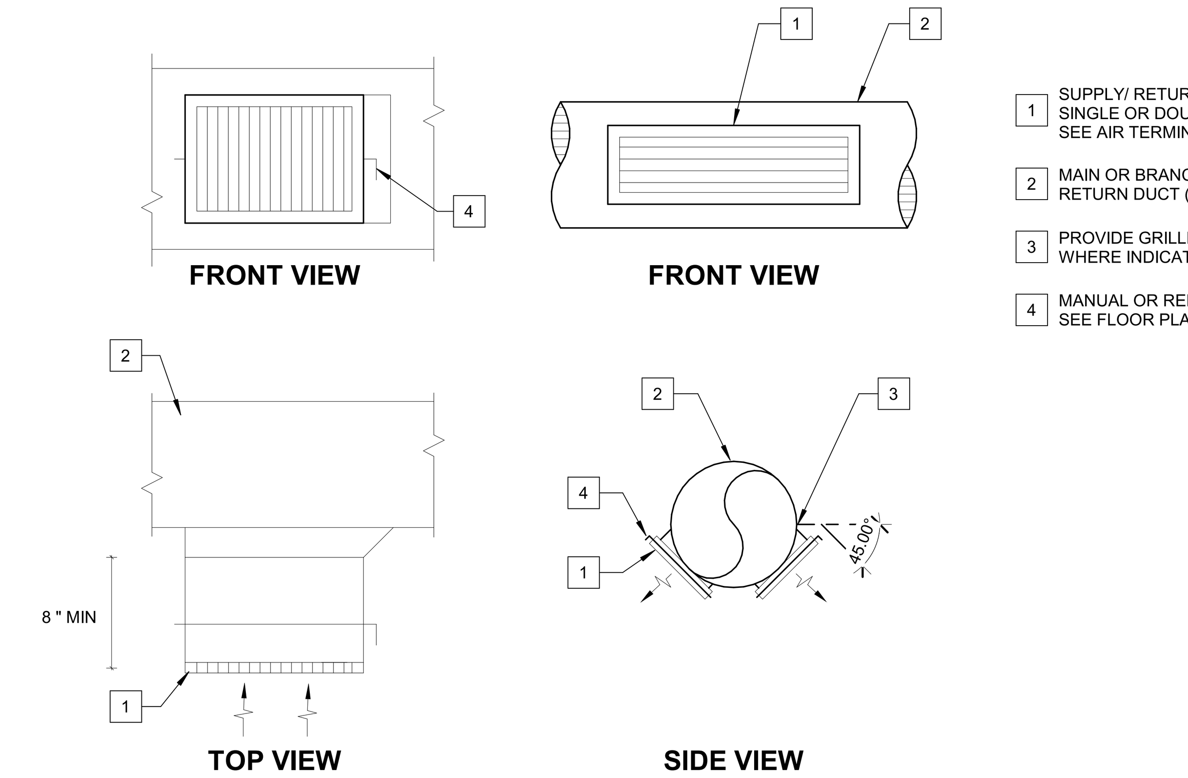

1	SUPPLY/ RETURN/ EXHAUST AIR GRILLE. SINGLE OR DOUBLE-DEFLECTION VANES. SEE AIR TERMINAL SCHEDULE FOR TYPE.
2	MAIN OR BRANCH SUPPLY/ EXHAUST/ RETURN DUCT (RECTANGULAR SIMILAR)
3	PROVIDE GRILLE EACH SIDE OF DUCT WHERE INDICATED ON PLANS
4	MANUAL OR REMOTE VOLUME DAMPER. SEE FLOOR PLAN FOR TYPE

DUCT MOUNTED GRILLE — NTS — 04

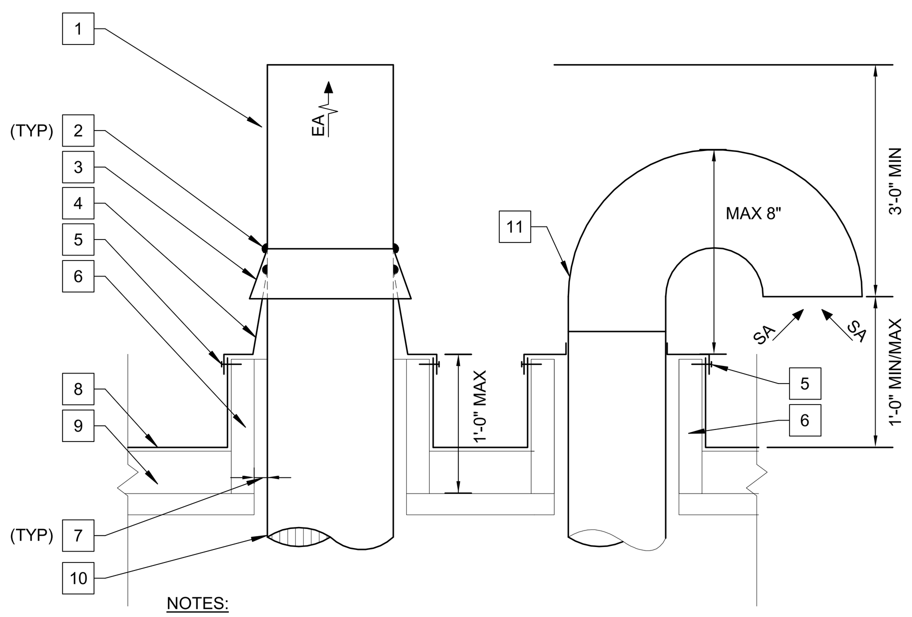

1	CPVC, SCHEDULE 40
2	SEALANT
3	STORM COLLAR
4	GALVANIZED STEEL SHEET METAL ROOF CURB FLASHING CAP
5	SECURE TO ROOF CURB WITH #8 SELF TAPPING SCREWS 12" O.C. MINIMUM 2 PER SIDE
6	LEVELED CURBED ROOF OPENING (SEE NOTE #1)
7	1" CLEARANCE FROM STRUCTURE. REFER TO TABLE 8.2, 2019 CMC FOR MIN. DISTANCE FROM COMBUSTIBLE MATERIAL. AS LISTED BY UL 441
8	ROOFING
9	ROOF DECK
10	CPVC, SCHEDULE 40 PIPE SIZE PER PLANS
11	CPVC, SCHEDULE 40 GOOSE NECK OUTSIDE AIR INTAKE. SIZE PER PLANS

NOTES:
1. SEE ARCHITECTURAL DETAIL 18/A8.22 AND 15/A8.21 FOR FLASHING AND WEATHERPROOFING DETAILS.
2. GAS VENT SHALL TERMINATE AT LEAST 3'-0" ABOVE A FORCED AIR INLET LOCATED WITHIN 10'-0".
3. SEE STRUCTURAL DETAIL 09/S6.91 FOR ATTACHMENT INFORMATION

TYPE "B" VENT THRU ROOF (UP TO 12") AND COMBUSTION AIR INTAKE — NTS — 19

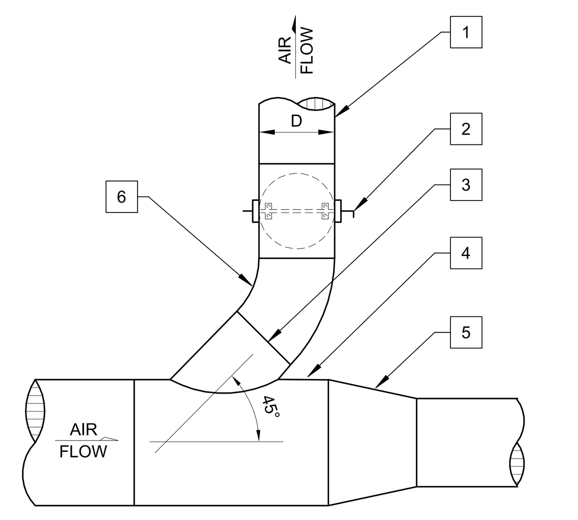

1	SHEET METAL DUCT AS SPECIFIED
2	LOCKING QUADRANT VOLUME DAMPER
3	LATERAL TAP
4	MAIN DUCT
5	TRANSITION
6	INSIDE RADIUS = DIAMETER

NOTE:
1. LATERAL TAKE-OFF UNLESS OTHERWISE NOTED ON PLANS.

ROUND DUCT TAKEOFF — NTS — 11

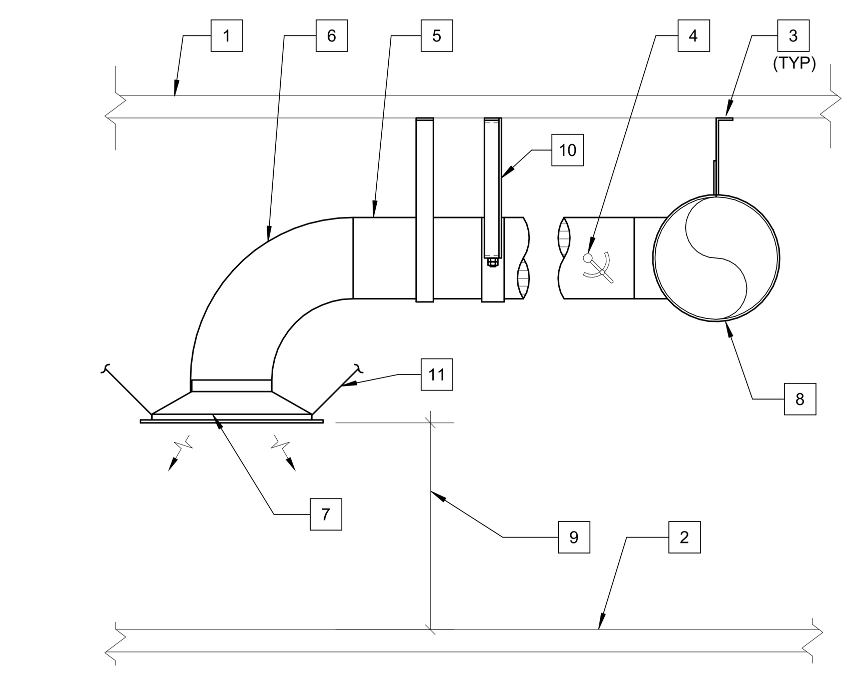

1	ROOF OR FLOOR ABOVE
2	FINISHED FLOOR
3	HANGER STRAP SECURE TO STRUCTURE ABOVE (SEE NOTE #1)
4	LOCKING QUADRANT VOLUME DAMPER
5	ROUND SPIRAL BRANCH DUCT REFER TO PLANS FOR SIZE
6	PROVIDE RADIUS ELBOW 1-1/2 TIMES DUCT DIAMETER
7	EXHAUST AIR GRILLE
8	EXHAUST AIR MAIN
9	MOUNTING HEIGHT (SEE NOTE #4)
10	LATERAL BRACE
11	HANGER STRAP SECURE TO STRUCTURE ABOVE

NOTE:
1. SEE STRUCTURAL HANGER DETAILS 03/S6.91 & 01/S6.91 FOR SEISMIC BRACING, METAL CHANNEL STRUT FRAMING, CABLE & ROD HANGER DETAILS.
2. FACTORY FABRICATE ALL EXPOSED DUCT FITTINGS.
3. ALL DUCTWORK AND HANGERS SHALL BE HORIZONTAL & VERTICAL WITH BUILDING.
4. REFER TO MECHANICAL DRAWINGS FOR HEIGHT OF DIFFUSER ABOVE FLOOR.

EXPOSED DUCT AND DIFFUSER — NTS — 03

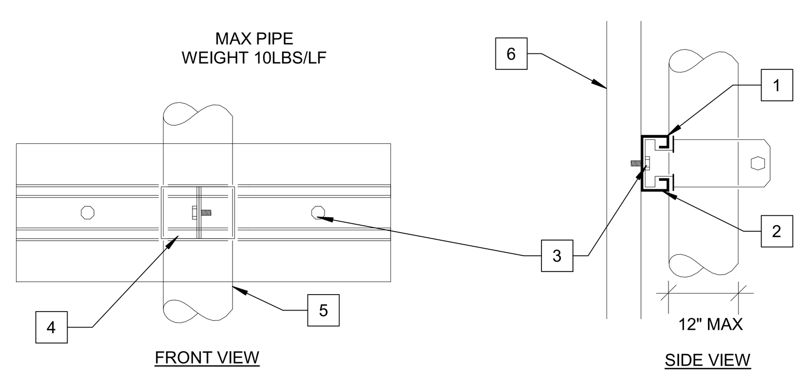

1	P1001 UNISTRUT HOT DIPPED GALVANIZED CHANNEL AND PIPE BRACKETS, SIZED FOR FULL PIPE SIZE
2	PROVIDE GAP BETWEEN INTEGRAL STRUT CHANNEL AND HARDWARE USED TO SECURE PIPE TO ALLOW FOR MOVEMENT OF SYSTEM
3	BOLT THRU WALL (SEE NOTE #1)
4	PROVIDE STANDARD STRUT CLAMPS
5	INSULATED PIPING
6	WALL

NOTE:
1. USE 1/2"Ø A307 BOLT INTO METAL STUD BACKING
2. PROVIDE A MAXIMUM OF 6'-0" VERTICALLY BETWEEN WALL SUPPORTS. ADDITIONALLY PROVIDE WALL SUPPORT WITHIN 2'-0" OF ANY CHANGE OF DIRECTION.

VERTICAL ROUND DUCT SUPPORT ON WALL — NTS — 18

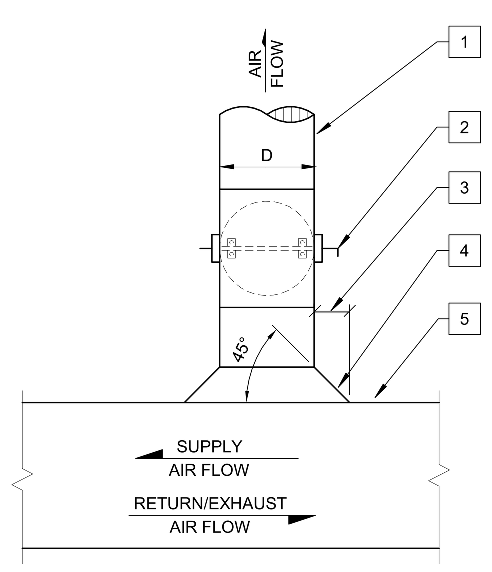

1	SHEET METAL DUCT AS SPECIFIED
2	LOCKING QUADRANT VOLUME DAMPER
3	1/3D, 6" MINIMUM
4	CONICAL TAP
5	MAIN DUCT

RECTANGULAR TO ROUND DUCT TAKEOFF — NTS — 14

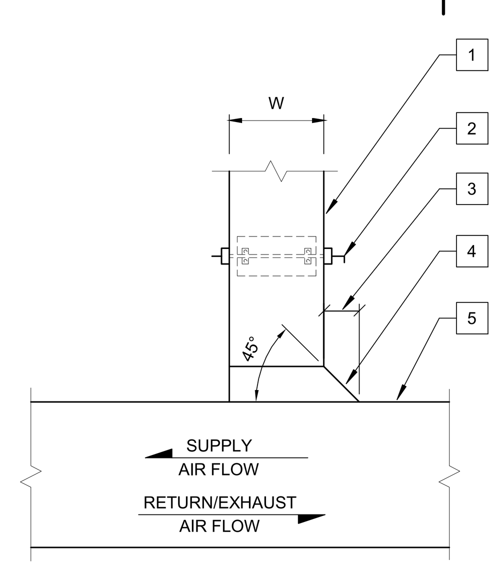

1	BRANCH DUCT
2	LOCKING QUADRANT VOLUME DAMPER
3	1/3W, 6" MINIMUM
4	CLINCH COLLAR
5	MAIN DUCT

RECTANGULAR DUCT TAKEOFF — NTS — 10

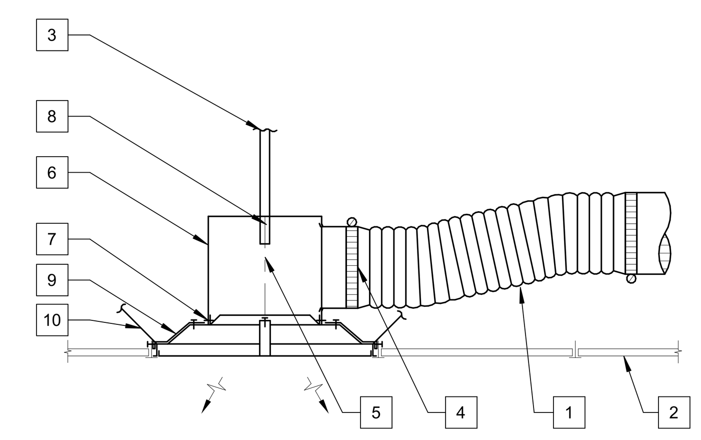

1	FLEXIBLE DUCT INSTALLED WITH INNER DUCT STRETCHED TIGHT, 5' MAXIMUM LENGTH
2	T-BAR CEILING
3	HANGER STRAP SECURE TO STRUCTURE ABOVE (SEE NOTE #1)
4	BEADED DUCT COLLAR (SEE NOTE #2)
5	PERFORATED SHEET METAL DIVIDER(49% FREE AREA) SPOT WELD TO PLENUM
6	PLENUM SIZE IS CEILING DIFFUSER NOMINAL NECK DIMENSIONS
7	FASTENERS, 2 EACH SIDE
8	ATTACH STRAP WITH 2 - #12 SMS
9	1" 20 GAGE DUCT STRAP ONE PER SIDE (4 TOTAL). ATTACH TO GRID WITH 2 #8 SM SCREWS. PROVIDE RUBBER WASHER WHEN TAPPING INTO AIR TERMINAL DEVICE
10	SECURE TO STRUCTURE ABOVE (SEE NOTES #1, #3 & #4)

NOTE:
1. SEE STRUCTURAL HANGER DETAILS 01/S6.91 AND SEISMIC BRACE DETAIL 03/S6.91 FOR UPPER ATTACHEMENT CONNECTION.
2. PULL BACK JACKET & INSULATION FROM CORE DUCT COLLECT EXCESS INNER DUCT PAST COLLAR BEAD UNTIL FULLY STRETCHED, THEN WRAP AT LEAST TWICE AROUND WITH APPROVED TAPE AND SECURE WITH APPROVED CLAMP. PULL JACKET & INSULATION BACK OVER THE CLAMP. SECURE JACKET WITH TWO WRAPS OF TAPE OR AN APPROVED CLAMP. TUCK IN EDGE OF JACKET OR TAPE. FIBERS SHALL NOT BE EXPOSED.
3. IF DIFFUSER IS LESS THAN OR EQUAL TO 56 LBS, PROVIDE TWO #12 GAGE SLACK SAFETY WIRES AT DIAGONAL CORNERS. IF DIFFUSER IS MORE THAN 56 LBS, PROVIDE INDEPENDENT SUPPORT USING 4 TAUT #12 GAGE WIRES, ONE AT EACH CORNER, ATTACHED TO STRUCTURE ABOVE.
4. CEILING MOUNTED AIR TERMINALS WEIGHING LESS THAN OR EQUAL TO 20LBS SHALL HAVE ONE (1) #12 GA. SLACK SAFETY WIRE ATTACHED FROM THE TERMINAL TO THE STRUCTURE ABOVE.

DIFFUSER WITH SIDE INLET PLENUM — NTS — 02

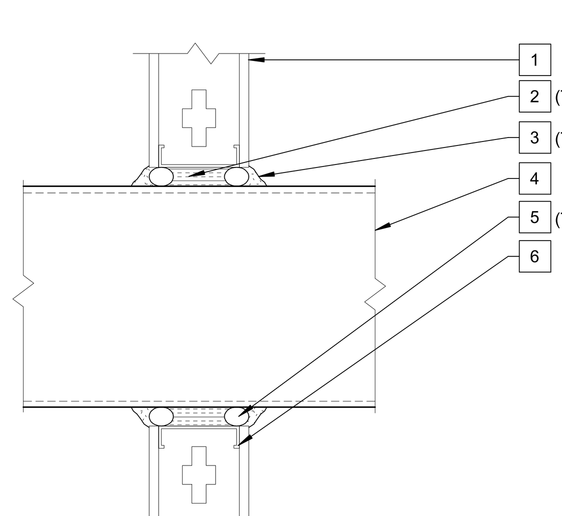

1	NON-RATED PARTITION (SEE NOTE #1)
2	FILL VOID WITH LOOSE ROCKWOOL OR GLASS FIBER
3	SEALANT
4	DUCT SIZE PER PLANS
5	BACKING ROD
6	FRAMED DUCT OPENING (SEE NOTE #2)

NOTES:
1. SEE ARCHITECTURAL DRAWINGS FOR PARTITION TYPE AND CONSTRUCTION.
2. SEE DRAWING S6.91 FOR TYPICAL OPENING FRAMING DETAILS.

DUCT THRU NON-RATED PARTITION — NTS — 13

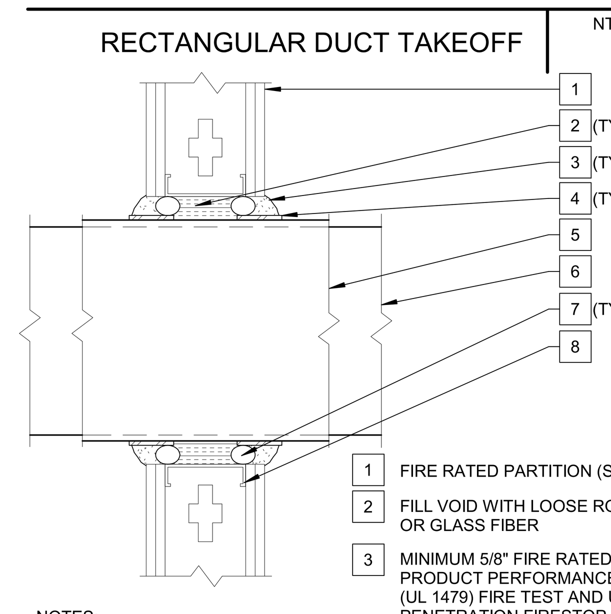

1	FIRE RATED PARTITION (SEE NOTE #1)
2	FILL VOID WITH LOOSE ROCKWOOL OR GLASS FIBER
3	MINIMUM 5/8" FIRE RATED CAULK. PRODUCT PERFORMANCE PER ASTM-E814 (UL 1479) FIRE TEST AND UL THROUGH-PENETRATION FIRESTOP SYSTEM #WL1002
4	1/4" THICK INTUMESCENT ELASTOMERIC MATERIAL FACED ON ONE SIDE WITH ALUMINUM FOIL
5	GLASS FIBER BLANKET INSULATION JACKETED ON THE OUTSIDE WITH FOIL-SCRIM-KRAFT FACING, LONGITUDINAL AND TRANSVERSE JOINTS SEALED WITH FOIL-SCRIM KRAFT TAPE
6	DUCT SIZE PER PLANS
7	BACKING ROD
8	FRAMED DUCT OPENING (SEE NOTE #2)

NOTES:
1. SEE ARCHITECTURAL DRAWINGS FOR PARTITION RATINGS AND CONSTRUCTION. FIRE STOP RATING SHALL MATCH PARITION RATING.
2. SEE DRAWING S6.91 FOR TYPICAL OPENING FRAMING DETAILS.

DUCT THRU RATED PARTITION — NTS — 09

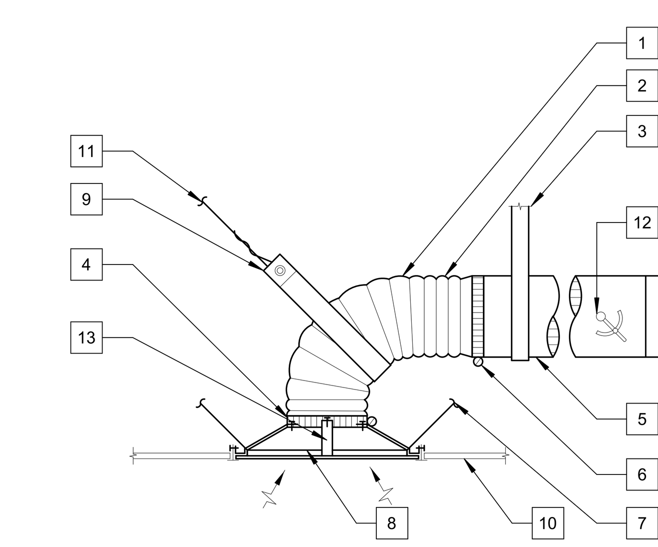

1	FLEX DUCT
2	INSULATED FLEXIBLE DUCT INSTALLED WITH INNER DUCT STRETCHED TAUT (TAKE UP SLACK)
3	HANGER STRAP SECURE TO STRUCTURE ABOVE (SEE NOTE #1)
4	DUCT COLLAR (SEE NOTE #2)
5	ROUND DUCT
6	3/8" BAND ON DUCT COLLARS (TYP)
7	SECURE TO STRUCTURE ABOVE (SEE NOTES #1, #3 #4)
8	FACTORY MOUNTED SHEET METAL INLET COLLAR SECURE WITH CLAMPING DEVICE
9	4" WIDE SHEET METAL STRAP
10	CEILING
11	SECURE WIRE TO STRUCTURE ABOVE (SEE NOTE #1)
12	LOCKING QUADRANT VOLUME DAMPER
13	1" 20 GAGE DUCT STRAP ONE PER SIDE (4 TOTAL), ATTACH TO GRID WITH 2 #8 SM SCREWS. PROVIDE RUBBER WASHER WHEN TAPPING INTO AIR TERMINAL DEVICE

NOTE:
1. SEE STRUCTURAL HANGER DETAILS 01/S6.91 AND SEISMIC BRACE DETAIL 03/S6.91 FOR UPPER ATTACHEMENT CONNECTION.
2. PULL BACK JACKET & INSULATION FROM CORE DUCT COLLECT EXCESS INNER DUCT PAST COLLAR BEAD UNTIL FULLY STRETCHED, THEN WRAP AT LEAST TWICE AROUND WITH APPROVED TAPE AND SECURE WITH APPROVED CLAMP. PULL JACKET & INSULATION BACK OVER THE CLAMP. SECURE JACKET WITH TWO WRAPS OF TAPE OR AN APPROVED CLAMP. TUCK IN EDGE OF JACKET OR TAPE. FIBERS SHALL NOT BE EXPOSED.
3. IF DIFFUSER IS LESS THAN OR EQUAL TO 56 LBS, PROVIDE TWO #12 GAGE SLACK SAFETY WIRES AT DIAGONAL CORNERS. IF DIFFUSER IS MORE THAN 56 LBS, PROVIDE INDEPENDENT SUPPORT USING 4 TAUT #12 GAGE WIRES, ONE AT EACH CORNER, ATTACHED TO STRUCTURE ABOVE.
4. CEILING MOUNTED AIR TERMINALS WEIGHING LESS THAN OR EQUAL TO 20LBS SHALL HAVE ONE (1) #12 GA. SLACK SAFETY WIRE ATTACHED FROM THE TERMINAL TO THE STRUCTURE ABOVE.

RETURN/EXHAUST GRILLE CONNECTION — NTS — 01

IDENTIFICATION STAMP
DIV. OF THE STATE ARCHITECT
APP: 02-119490 INC:
REVIEWED FOR
SS ☑ FLS ☑ ACS ☑
DATE: 09/13/2022

LPA
ARCHITECTURE ENGINEERING INTERIORS
LANDSCAPE ARCHITECTURE PLANNING

916-287-2400 Office
916-287-2401 Fax
LPADesignStudios.com

431 I Street,
Suite 107
Sacramento, California 95814

REGISTERED PROFESSIONAL ENGINEER — CHRISTOPHER D. ... — M32973 — 12/31/2022 — MECHANICAL — STATE OF CALIFORNIA

This document and all other project documents, ideas, aesthetics and designs incorporated therein are instruments of service. All project documents are copyright protected, are the property of LPA, Inc. (LPA) and cannot be lawfully used in whole or in part for any project or purpose except as set forth in the contract agreement between LPA and its Client. The unauthorized disclosure and/or use of the project documents (including the creation of derivative works), may give rise to liability for copyright infringement, unlawful disclosure, use or misappropriation of property rights held by LPA. The unauthorized use of the project documents will give rise to the recovery of monetary losses and damages including attorney fees and costs for which the unauthorized user will be held liable.
Project documents describe the design intent of the work and are not a representation of as-built or existing conditions. LPA is not responsible for any discrepancies between the project documents and the existing conditions.
© LPA, Inc.

DAVIS SR HIGH SCHOOL AQUATICS CENTER
315 W 14TH ST., DAVIS, CA 95616
Developed for
DAVIS JOINT UNIFIED SCHOOL DISTRICT

Revision	Date

Submittal	Date
50% DD REVIEW	06/15/2021
100% DD SUBMITTAL	07/26/2021
50% CD REVIEW	10/08/2021
100% CD DSA SUBMITTAL	10/22/2021
DSA SUBMITTAL	03/24/2022

Job Number	1904413
Date Published	03/24/2022
Checked By	LPA
Scale	

MECHANICAL DETAILS AND DIAGRAMS

M7.10

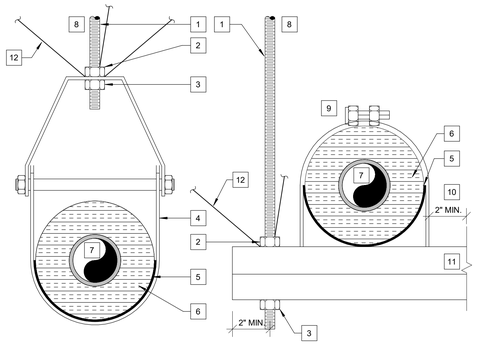

1. THREADED ROD HANGER (SEE NOTE #2)
2. LOCKING NUT
3. SUPPORT NUT
4. HEAVY DUTY CLEVIS HANGER
5. 14 GAGE ZINC COATED SADDLE
6. HARD INSULATION (2" THICK) FULL LENGTH OF SADDLE
7. PIPE. MAX DIAMETER OF PIPE TO BE 2". MAX WEIGHT 2 LBS/LF (SEE PLANS FOR SIZES)
8. UPPER ATTACHMENT (SEE NOTE #2)
9. STRUCT CLAMP OR U-BOLT
10. MINIMUM DISTANCE TO NEXT PIPE. MAX DIAMETER OF PIPE TO BE 2" (6 PIPES MAX)
11. P1001 UNISTRUT. MAX SPAN 4'-0". MAX. WEIGHT 1,000 LBS
12. SEISMIC AIRCRAFT CABLE IN 4 DIRECTIONS OF UNISTRUT PER SINGLE PIPE INGLE (SEE NOTE #3)

NOTES:
1. MAXIMUM HORIZONTAL HANGER SPACING FOR 1-1/4" PIPING AND SMALLER TO BE 5'-0" AND 1-1/2" PIPING AND LARGER TO BE 8'-0".
2. SEE STRUCTURAL HANGER DETAILS 01 & 12/S6.91 FOR METAL CHANNEL STRUT FRAMING.
3. 1/4" DIA AIRCRAFT CABLE PER DETAIL 01/S6.91. PROVIDE CABLE BRACING ON ALL 4 DIRECTIONS OF UNISTRUT/HANGER PER SINGLE PIPE.
   - PROVIDE TRANSVERSE BRACING AT 16'-0" MAX, O.C. EACH DIRECTION. MINIMUM (2) ON EACH STRAIGHT RUN.
   - PROVIDE LONGITUDINAL BRACING AT 24'-0" MAX. O.C. EACH SIDE OF UNISTRUT/HANGER, EACH DIRECTION. MINIMUM (1) ON EACH STRAIGHT RUN.

REFRIGERANT PIPE AND TRAPEZE HANGER — NTS — 20

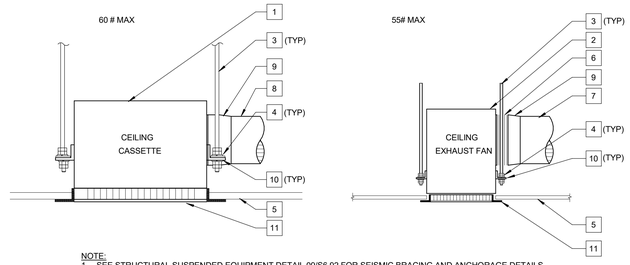

NOTE:
1. SEE STRUCTURAL SUSPENDED EQUIPMENT DETAIL 09/S6.92 FOR SEISMIC BRACING AND ANCHORAGE DETAILS

1. CEILING CASSETTE UNIT
2. CEILING EXHAUST FAN
3. 3/8" THREADED ROD, TYP. 4, (SEE NOTE #1).
4. DOUBLE NUTS WITH LOCKWASHER AT TOP AND BOTTOM OF FLANGE. REFER TO AND FOLLOW MANUFACTURER INSTALLATION INSTRUCTIONS AND PROVIDE ALL NECESSARY HARDWARE.
5. CEILING ASSEMBLY
6. FLEXIBLE CONNECTION
7. EXHAUST DUCT SIZE AND ROUTING PER PLAN
8. OUTSIDE AIR DUCT CONNECTION .
9. TRANSITION TO MATCH DUCT OPENING
10. FAN MANUFACTURER'S MOUNTING ANGLE
11. CEILING GRILLE

CEILING CASSETTE AND FAN DETAIL — NTS — 12

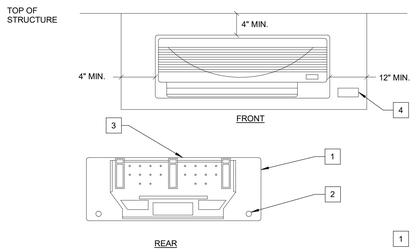

NOTE:
1. CLEARANCES OF 4" ON TOP OF AND TO THE LEFT OF THE FAN COIL UNIT ARE ABSOLUTE MIN. CLEARANCES OF 10" ARE RECOMMENDED .
2. REFRIGERANT IS METERED BY CAPILLARY TUBES IN THE OUTDOOR UNIT. INSULATE BOTH REFRIGERANT LINES.
3. REFRIGERANT, DRAIN, AND POWER CONNECTIONS TO BE MADE IN THE REAR OF THE UNIT .
4. WALL MOUNTED CONDENSATE PUMP FOR DUCTLESS FAN COIL UNITS SHALL HAVE SEPARATE 120V CONNECTION FOR PUMP.

1. SECURE FACTORY MOUNTING BRACKET TO WALL. SEE STRUCTURAL TYPICAL WALL MOUNTED DETAIL 11/S6.91 FOR MASONRY WALLS FOR ALL ANCHORAGE DETAILS.
2. KNOCKOUT FOR REFRIGERANT, DRAIN, POWER AND SIGNAL LINES
3. UNIT OUTLINE
4. WALL MOUNTED CONDENSATE PUMP

WALL MOUNTED FAN COIL IN CMU WALL DETAIL — NTS — 04

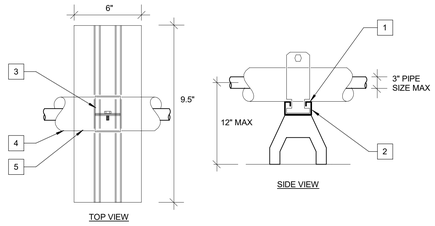

1. COOPER B-LINE DURA-BLOCK WITH INTEGRAL CHANNEL AND PIPE BRACKETS, SIZED FOR INSULATED PIPING
2. PROVIDE GAP BETWEEN INTEGRAL STRUT CHANNEL AND HARDWARE USED TO SECURE PIPE TO ALLOW FOR MOVEMENT OF SYSTEM
3. PROVIDE STANDARD STRUT CLAMPS
4. MAXIMUM (2) NON-GAS PIPES PER SUPPORT
5. PIPE JACKET

NOTES:
1. PROVIDE A MAXIMUM OF 6'-0" BETWEEN SUPPORT BLOCKS. ADDITIONALLY PROVIDE BLOCK WITHIN 2'-0" OF ANY CHANGE OF DIRECTION. REFER TO MANUFACTURER'S DATA FOR BLOCK SPACING OF MULTIPLE PIPES.
2. SEE ARCHITECTURAL DETAIL 03/A8.20 FOR PIPE SUPPORT ON ROOF

PIPE SUPPORT ON ROOF — NTS — 19

NOTES:
1. SEE ARCHITECTURAL DETAIL 05/A8.21 FOR FLASHING AND WEATHERPROOFING DETAILS.
2. SEE STRUCTURAL DETAIL 09/S6.91 FOR ATTACHMENT TO ROOF DETAIL.
3. WELDING OF HOT ROLLED AND COLD FORMED STEEL MANUFACTURED SUPPORT FRAMES AND CURBS FOR EQUIPMENT WEIGHING LESS THAN 2000 # IS EXEMPT FROM SPECIAL INSPECTION.

1. FAN MOTOR AND DRIVE, SEE SCHEDULE FOR MOTOR AND DRIVE TYPE
2. DISCONNECT SWITCH BY FAN MANUFACTURER
3. PIGTAIL CORD
4. INTERNAL ALUMINUM WIRE POST BY FAN MANUFACTURER
5. ALUMINUM HOUSING
6. DUCT SIZE PER PLANS, MAX 16" x 16", ROOF OPENING 16" + 1-1/2" EACH SIDE.
7. SECURE TO ROOF CURB WITH #12 SELF TAPPING SCREWS 12" O.C. MINIMUM 2 PER SIDE.
8. LEVELED MANUFACTURER'S ROOF CURB (SEE NOTE #1 & #2)
9. ROOFING
10. ROOF DECK
11. BACKDRAFT DAMPER
12. PACK OPENING WITH INSULATION
13. GALVANIZED SHEET METAL CLOSURE BELOW ROOF TO RETAIN INSULATION AROUND THE DUCT
14. MAX HEIGHT 12"
15. METAL DECK

UP BLAST EXHAUST FAN — NTS — 11

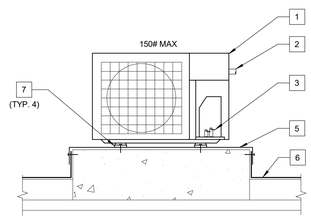

1. CONDENSING UNIT
2. ELECTRICAL INLETS
3. REFRIGERANT PIPING, SIZE PER MANUFACTURER'S RECOMMENDATIONS
4. N/A
5. LEVEL CONCRETE PAD WITH CAP (SEE NOTES #1 & #2)
6. ROOFING
7. ANCHORAGE TABS INTEGRAL TO CONDENSING UNIT. BOLT THRU TAB AND ISOLATOR PAD TO CONCRETE CURB (SEE NOTE #2)

NOTE:
1. SEE ARCHITECTURAL DETAIL 13/A8.21 FOR FLASHING AND WEATHERPROOFING DETAILS.
2. SEE STRUCTURAL DETAIL 15/S6.92 FOR CONDENSING UNIT CONCRETE ATTACHEMENT.

CONDENSING UNIT ON CONCRETE PAD — NTS — 03

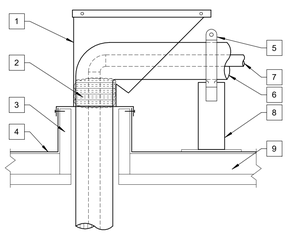

1. GALVANIZED SHEET METAL ROOF JACK WITH CAP. REMOVABLE COVER ATTACHED WITH 2 #8 SELF TAPPING SCREWS EACH SIDE
2. FILL OPENING WITH FOAM
3. FRAMED ROOF OPENING (SEE NOTE #1)
4. ROOFING
5. STRUT CLAMP
6. PIPE INSULATION TO BE INSTALLED CONTINUOUSLY AT SUPPORTS AND CLAMPS
7. PIPE SIZE PER PLAN (SEE NOTE #2)
8. PIPE SUPPORT (SEE ARCHITECTURAL DETAIL 3/A8.20)
9. ROOF DECK

NOTE:
1. SEE ARCHITECTURAL DETAIL 03/A8.21 FOR FLASHING AND WEATHERPROOFING DETAILS.
2. MULTIPLE PIPES PER ROOF JACK. MAXIMUM OF 6 PIPES.

PIPING ROOF JACK — NTS — 18

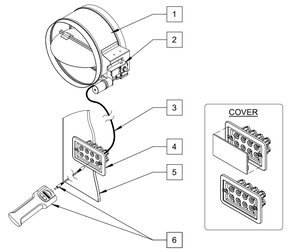

1. ROUND DAMPER OR RECTANGULAR SINGLE BLADE DAMPER
2. UNIVERSAL DRIVE DAMPER
3. PLENUM RATED WIRE WITH FEMALE DC POWER CONNECTOR
4. EIGHT CONNECTOR WALL PLATE INTERFACE WITH COVER
5. FINISHED WALL
6. MOTOR CONTROL MODULE AND WIRE TETHER

NOTE:
1. COORDINATE EXACT LOCATION OF WALL MOUNTED CONCEALED REGULATOR WITH ARCHITECT PRIOR TO INSTALLATION.
2. THE ELECTRONIC AND REMOTE CONTROL SYSTEM IS DESIGNED TO BE IMBEDDED IN THE WALL WITH THE FINISHED SURFACE.
3. OPERATION TO BE ADJUSTABLE USING HAND HELD REMOTE.

CONCEALED ELECTRONIC REGULATOR CABLE SYSTEM DETAIL — 1" = 1'-0" — 10

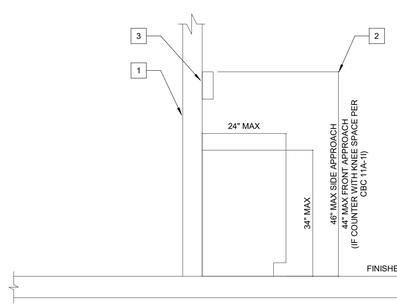

1. WALL
2. TOP OF THERMOSTAT, SWITCH, OUTLET, CONTROL
3. THERMOSTAT OR ZONE TEMPERATURE SENSOR

THERMOSTAT MOUNTING OVER OBSTRUCTION — NTS — 02

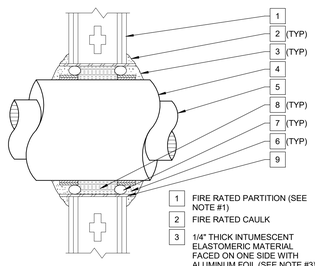

1. FIRE RATED PARTITION (SEE NOTE #1)
2. FIRE RATED CAULK
3. 1/4" THICK INTUMESCENT ELASTOMERIC MATERIAL FACED ON ONE SIDE WITH ALUMINUM FOIL (SEE NOTE #3)
4. PIPE INSULATION (SEE NOTE #2)
5. PIPE SIZE PER PLANS
6. MINIMUM 1" DEEP FIRE RATED CAULK
7. BACKING ROD
8. FILL VOID WITH LOOSE ROCKWOOL OR GLASS FIBER
9. 28 GAUGE GALVANIZED SHEET STEEL SLEEVE WITH A MINIMUM 2" LAP ALONG THE LONGITUDINAL SEAM

NOTES:
1. SEE ARCHITECTURAL DRAWINGS FOR PARTITION RATINGS AND CONSTRUCTION. FIRE STOP RATING SHALL MATCH PARTITION RATING.
2. SEE PIPE INSULATION SCHEDULE ON DRAWING MX.XX FOR MATERIAL AND THICKNESS REQUIREMENTS.
3. FIRESTOPPING TO BE IN COMPLIANCE WITH REQUIREMENTS OF ASTM E814, & ANSI/UL 1479

PIPE THRU FIRE RATED PARTITION — NTS — 08

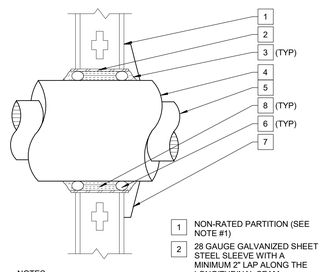

1. NON-RATED PARTITION (SEE NOTE #1)
2. 28 GAUGE GALVANIZED SHEET STEEL SLEEVE WITH A MINIMUM 2" LAP ALONG THE LONGITUDINAL SEAM
3. SEALANT
4. PIPE INSULATION (SEE NOTE #2)
5. PIPE SIZE PER PLANS
6. BACKING ROD
7. PROVIDE ESCUTCHEON PLATE AT EXPOSED PENETRATIONS
8. FILL VOID WITH LOOSE ROCKWOOL OR GLASS FIBER

NOTES:
1. SEE ARCHITECTURAL DRAWINGS FOR PARTITION TYPE AND CONSTRUCTION.
2. SEE PIPE INSULATION REQUIREMENTS ON DRAWING M0.20 FOR MATERIAL AND THICKNESS REQUIREMENTS.

PIPE THRU NON-RATED PARTITION — NTS — 09

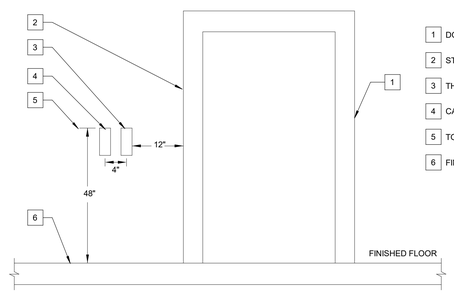

*PROVIDE MIN. 30"x48" CLEAR FLOOR SPACE FOR PERPENDICULAR APPROACH AT EACH LOCATION.

1. DOOR JAMB
2. STRIKE SIDE OF JAMB
3. THERMOSTAT OR ZONE TEMPERATURE SENSOR
4. CARBON DIOXIDE OR OTHER ZONE SENSOR
5. TOP OF STAT, SWITCH, SENSOR, ETC.
6. FINISHED FLOOR

THERMOSTAT MOUNTING HEIGHT DETAIL — NTS — 01

IDENTIFICATION STAMP
DIV. OF THE STATE ARCHITECT
APP: 02-119490 INC:
REVIEWED FOR
SS ☑ FLS ☑ ACS ☑
DATE: 09/13/2022

LPA
ARCHITECTURE ENGINEERING INTERIORS
LANDSCAPE ARCHITECTURE PLANNING

916-287-2400 Office
916-287-2401 Fax
LPADesignStudios.com
431 I Street,
Suite 107
Sacramento, California 95814

REGISTERED PROFESSIONAL ENGINEER CHRISTOPHER A. TAYLOR M32973 12/31/2022 MECHANICAL STATE OF CALIFORNIA

This document and all other project documents, ideas, aesthetics and designs incorporated therein are instruments of service. All project documents are copyright protected, are the property of LPA, Inc. (LPA) and cannot be lawfully used in whole or in part for any project or purpose except as set forth in the contractual agreement between LPA and its Client. The unauthorized disclosure and/or use of the project documents (including the creation of derivative works), may give rise to liability for copyright infringement, unlawful disclosure, use or misappropriation of property rights held by LPA. The unauthorized use of the project documents will give rise to the recovery of monetary losses and damages including attorney fees and costs for which the unauthorized user will be held liable.
Project documents describe the design intent of the work and are not a representation of as-built or existing conditions. LPA is not responsible for any discrepancies between the project documents and the existing conditions.

© LPA, Inc.

DAVIS SR HIGH SCHOOL
AQUATICS CENTER
315 W 14TH ST., DAVIS, CA 95616

Developed for
DAVIS JOINT UNIFIED SCHOOL DISTRICT

Revision	Date

Submittal	Date
50% DD REVIEW	06/15/2021
100% DD SUBMITTAL	07/26/2021
50% CD REVIEW	10/08/2021
100% CD DSA SUBMITTAL	10/22/2021
DSA SUBMITTAL	03/24/2022

Job Number	1904413
Date Published	03/24/2022
Checked By	LPA
Scale	

MECHANICAL DETAILS AND DIAGRAMS

M7.20

PLUMB ANNOTATION SYMBOLS

DETAIL
DETAIL IDENTIFICATION
SEE 1 P8.01 TYP — OCCURANCE
SHEET WHERE DETAIL IS DRAWN

ENLARGED PLAN
PLAN IDENTIFICATION
1 P4.01 — SHEET WHERE PLAN IS DRAWN

CONTINUATION
PLAN IDENTIFICATION
SEE 1 P2.01 FOR CONT — SHEET WHERE PLAN IS DRAWN

FIXTURE OR EQUIPMENT IDENTIFICATION
FIXTURE IDENTIFICATION
RD-1 3", 900 SF — SPECIFIC INFORMATION
TYP OF 4 — OCCURANCE

FOOD SERVICE SCHEDULE REFERENCE NO.
109 IW TO FS-1 — SPECIFIC INFORMATION
TYP OF 2 — OCCURANCE

REVISION
1 — CLOUD AROUND REVISED AREA OPTIONAL

KEYNOTE IDENTIFICATION
0101 1", 150 CFH — SPECIFIC INFORMATION
TYP OF 3 — OCCURANCE

DEMOLITION KEYNOTE
0101 — DEMOLITION KEYNOTE IDENTIFICATION
TYP OF 4 — OCCURANCE

PLUMBING LEGEND

SYMBOL	ABBREVIATION	DESCRIPTION
	AV	ACID VENT PIPING
	AW	ACID WASTE PIPING ABOVE FINISHED FLOOR
	AW-U	ACID WASTE PIPING UNDERGROUND
	GV	GREASE VENT PIPING
	GW	GREASE WASTE PIPING ABOVE FINISHED FLOOR
	GW-U	GREASE WASTE PIPING UNDERGROUND
	V	SANITARY VENT PIPING
	SS	SANITARY SOIL OR WASTE PIPING ABOVE FINISHED FLOOR
	SS-U	SANITARY SOIL OR WASTE PIPING UNDERGROUND
	OD	OVERFLOW DRAIN PIPING
	SD	STORM DRAIN PIPING ABOVE FINISHED FLOOR
	SD-U	STORM DRAIN PIPING UNDERGROUND
	SSD	SUBSOIL DRAINAGE PIPING
	CD	CONDENSATE DRAIN PIPING
	OCD	OVERFLOW CONDENSATE DRAIN PIPING
	HBD	HOSE BIBB DRAINAGE PIPING
	RW	RECLAIMED WATER PIPING
	IRR	IRRIGATION PIPING
	ICW	INDUSTRIAL COLD WATER PIPING
	RO	REVERSE OSMOSIS BLENDED WATER PIPING
	CW	DOMESTIC COLD WATER PIPING
	HW	DOMESTIC HOT WATER PIPING
	HWR	DOMESTIC HOT WATER RETURN PIPING
	TW	DOMESTIC TEMPERED WATER PIPING
	TWR	DOMESTIC TEMPERED WATER RETURN PIPING
	SCW	DOMESTIC SOFT COLD WATER PIPING
	SHWR	DOMESTIC SOFT HOT WATER RETURN PIPING
	VAC	VACUUM PIPING
	CA	COMPRESSED AIR PIPING
	G	STANDARD PRESSURE GAS PIPING (8" W.C.)
	MPG	MEDIUM PRESSURE GAS PIPING (5 PSI)
	MPG-U	MEDIUM PRESSURE GAS PIPING UNDERGROUND (5 PSI)
	COMB. AIR	WATER HEATER COMBUSTION AIR
	EXH. AIR	WATER HEATER EXHAUST AIR
	CVTR	WATER HEATER CONCENTRIC VENT THRU ROOF
	SOV IN CLG AP	SHUT-OFF VALVE IN CEILING ACCESS PANEL
	SOV IN YB	SHUT-OFF VALVE BELOW FINISHED GRADE IN YARD BOX
	SOV	SHUT-OFF VALVE ABOVE FINISHED GRADE
	SOV / SOC IN WALL AP	SHUT-OFF VALVE / SHUT-OFF COCK IN WALL ACCESS PANEL
	SOC	SHUT-OFF COCK ABOVE FINISHED GRADE
	SOC IN CLG AP	SHUT-OFF COCK IN CEILING ACCESS PANEL
	SOC IN YB	SHUT-OFF COCK BELOW FINISHED GRADE IN YARD BOX
	WHA IN WALL AP	WATER HAMMER ARRESTOR IN WALL ACCESS PANEL
	TP W/ SOV	TRAP PRIMER WITH SOV IN WALL ACCESS PANEL
	RHB	RECESSED HOSE BIBB
	HB	HOSE BIBB
	AP	ACCESS PANEL
	WB	WASHING MACHINE OUTLET BOX WITH 1/4 TURN VALVES
	IB	ICE MAKER OUTLET BOX WITH 1/4 TURN VALVE
	SV	SOLENOID VALVE
	GT	GAS TURRET
	GPR	GAS PRESSURE REGULATOR
	MV / TMV	MIXING VALVE / THERMOSTATIC MIXING VALVE
	WCO	WALL CLEANOUT
	FCO	FLOOR CLEANOUT
	COTG	CLEANOUT TO GRADE
	FD	FLOOR DRAIN OR AREA DRAIN
	FD	FLOOR DRAIN OR AREA DRAIN
	FS	FLOOR SINK
		DRYWELL
	RR	ROOF RECEPTOR
		OVERFLOW DRAIN SPILL TO GRADE
		PIPE RISER DOWN (ELBOW)
		PIPE RISER UP (ELBOW)
		PIPE RISE OR DROP
		BRANCH LINE TOP CONNECTION
		BRANCH LINE BOTTOM CONNECTION
		CAP ON END OF PIPE
		UNION
		SLEEVE
		SEISMIC JOINT
		FLOW IN DIRECTION OF ARROW
		CONTINUATION OF PIPING
	BLV	BALANCING VALVE
	PRV	PRESSURE REDUCING VALVE
	TPV	TEMPERATURE AND PRESSURE RELIEF VALVE
	CV	CHECK VALVE
RPBP	RPBP	REDUCED PRESSURE BACKFLOW PREVENTER
CS		CONTROL STATION
		STRAINER
		PUMP
P1		PRESSURE GAUGE
T1		TEMPERATURE GAUGE
FS		FLOW SWITCH
PS		PRESSURE SWITCH
		AQUASTAT
		HATCH INDICATES ITEM(S) TO BE DEMOLISHED

DSA STRUCTURAL NOTES

MEP COMPONENT ANCHORAGE NOTE

1. ALL MECHANICAL, PLUMBING, AND ELECTRICAL COMPONENTS SHALL BE ANCHORED AND INSTALLED PER THE DETAILS ON THE DSA APPROVED CONSTRUCTION DOCUMENTS. THE FOLLOWING COMPONENTS SHALL BE ANCHORED OR BRACED TO MEET THE FORCE AND DISPLACEMENT REQUIREMENTS PRESCRIBED IN THE 2019 CBC, SECTIONS 1617A.1.18 THROUGH 1617A.1.26 AND ASCE 7-16 CHAPTERS 13, 26 AND 30:
   A. ALL PERMANENT EQUIPMENT AND COMPONENTS.
   B. TEMPORARY, MOVEABLE OR MOBILE EQUIPMENT THAT IS PERMANENTLY ATTACHED (e.g. HARD WIRED) TO THE BUILDING UTILITY SERVICES SUCH AS ELECTRICITY, GAS OR WATER. "PERMANENTLY ATTACHED" SHALL INCLUDE ALL ELECTRICAL CONNECTIONS EXCEPT PLUGS FOR 110/220 VOLT RECEPTACLES HAVING A FLEXIBLE CABLE.
   C. TERMPORARY, MOVABLE OR MOBILE EQUIPMENT WHICH IS HEAVIER THAN 400 POUNDS OR HAS A CENTER OF MASS LOCATED 4 FEET OR MORE ABOVE THE ADJACENT FLOOR OR ROOF LEVEL THAT DIRECTLY SUPPORT THE COMPONENT IS REQUIRED TO BE RESTRAINED IN A MANNER APPROVED BY DSA.
2. THE FOLLOWING MECHANICAL AND ELECTRICAL COMPONENTS SHALL BE POSITIVELY ATTACHED TO THE STRUCTURE, BUT NEED NOT DEMONSTRATE DESIGN COMPLIANCE WITH THE REFERENCES NOTED ABOVE. THESE COMPONENTS SHALL HAVE FLEXIBLE CONNECTIONS PROVIDED BETWEEN THE COMPONENT AND ASSOCIATED DUCTWORK, PIPING, AND CONDUIT. FLEXIBLE CONNECTIONS MUST ALLOW MOVEMENT IN BOTH TRANSVERSE AND LONGITUDINAL DIRECTIONS:
   A. COMPONENTS WEIGHING LESS THAN 400 POUNDS AND HAVE A CENTER MASS LOCATED 4 FEET OR LESS ABOVE THE ADJACENT FLOOR OR ROOF LEVEL THAT DIRECTLY SUPPORT THE COMPONENT.
   B. COMPONENTS WEIGHING LESS THAN 20 POUNDS, OR IN THE CASE OF DISTRIBUTED SYSTEMS, LESS THAN 5 POUNDS PER FOOT, WHICH ARE SUSPENDED FROM A ROOF OR FLOOR OR HUNG FROM A WALL.
3. THE ANCHORAGE OF ALL MECHANICAL, ELECTRICAL AND PLUMBING COMPONENTS SHALL BE SUBJECT TO THE APPROVAL OF THE DESIGN PROFESSIONAL IN GENERAL RESPONSIBLE CHARGE OR STRUCTURAL ENGINEER DELEGATED RESPONSIBILITY AND ACCEPTANCE BY DSA. THE PROJECT INSPECTOR WILL VERIFY THAT ALL COMPONENTS AND EQUIPMENT HAVE BEEN ANCHORED IN ACCORDANCE WITH ABOVE REQUIREMENTS.

PIPING DUCTWORK AND ELECTRICAL DISTRIBUTION SYSTEM BRACING NOTE

PIPING, DUCTWORK, AND ELECTRICAL DISTRIBUTION SYSTEMS SHALL BE BRACED TO COMPLY WITH THE FORCES AND DISPLACEMENTS PRESCRIBED IN ASCE 7-16 SECTION 13.3 AS DEFINED IN ASCE 7-16 SECTIONS 13.6.5, 13.6.6, 13.6.7, 13.6.8; AND 2019 CBC, SECTIONS 1617A.1.24, 1617A.1.25 AND 1617A.1.26.

THE METHOD OF SHOWING BRACING AND ATTACHMENTS TO THE STRUCTURE FOR THE IDENTIFIED DISTRIBUTION SYSTEM ARE AS NOTED BELOW. WHEN BRACING AND ATTACHMENTS ARE BASED ON A PREAPPROVED INSTALLATION GUIDE (e.g. OSHPD OPM FOR 2013 CBC OR LATER), COPIES OF THE BRACING SYSTEM INSTALLATION GUIDE OR MANUAL SHALL BE AVAILABLE ON THE JOBSITE PRIOR TO THE START AND DURING THE HANGING AND BRACING OF THE DISTRIBUTION SYSTEMS. THE STRUCTURAL ENGINEER OF RECORD SHALL VERIFY THE ADEQUACY OF THE STRUCTURE TO SUPPORT THE HANGER AND BRACE LOADS.

MECHANICAL PIPING (MP), MECHANICAL DUCTS (MD), PLUMBING PIPING (PP), ELECTRICAL DISTRIBUTION SYSTEMS (E):

MP☐ MD☐ PP■ E☐ — OPTION 1: DETAILED ON THE APPROVED DRAWINGS WITH PROJECT SPECIFIC NOTES AND DETAILS.

MP☐ MD☐ PP☐ E☐ — OPTION 2: SHALL COMPLY WITH THE APPLICABLE PRE-APPROVAL (OPM#): MASON WEST 0043-13 OR MW SAUSSE 0203-13

APPLICABLE CODES

BUILDING CODES: (APPLICABLE AS OF JANUARY 1, 2020)

2019 CALIFORNIA BUILDING STANDARDS ADMINISTRATIVE CODE, PART 1, TITLE 24 C.C.R.

2019 CALIFORNIA BUILDING CODE (CBC), PART 2, TITLE 24 C.C.R.;
(2018 INTERNATIONAL BUILDING CODE OF THE INTERNATIONAL CODE COUNCIL, WITH CALIFORNIA AMENDMENTS)

2019 CALIFORNIA ELECTRICAL CODE (CEC), PART 3, TITLE 24 C.C.R.;
(2017 NATIONAL ELECTRICAL CODE OF THE NATIONAL FIRE PROTECTION ASSOCIATION, NFPA)

2019 CALIFORNIA MECHANICAL CODE (CMC), PART 4, TITLE 24 C.C.R.;
(2018 UNIFORM MECHANICAL CODE OF THE INTERNATIONAL ASSOCIATION OF PLUMBING AND MECHANICAL OFFICIALS, IAPMO)

2019 CALIFORNIA PLUMBING CODE (CPC), PART 5, TITLE 24 C.C.R.;
(2018 UNIFORM PLUMBING CODE OF THE INTERNATIONAL ASSOCIATION OF PLUMBING AND MECHANICAL OFFICIALS, IAPMO)

2019 ENERGY CODE (CEC), PART 6, TITLE 24 C.C.R.;

2019 CALIFORNIA FIRE CODE, PART 9, TITLE 24 C.C.R.;
(2018 INTERNATIONAL FIRE CODE OF THE INTERNATIONAL CODE COUNCIL)

2019 CALIFORNIA GREEN BUILDING CODE (CAL GREEN), PART 11, TITLE 24 C.C.R.

2019 CALIFORNIA REFERENCED STANDARDS, PART 12, TITLE 24 C.C.R.

2019 TITLE 19 C.C.R., PUBLIC SAFETY, STATE FIRE MARSHAL REGULATIONS.

PARTIAL LIST OF APPLICABLE STANDARDS

ASHRAE 62.1	VENTILATION FOR ACCEPTABLE INDOOR AIR QUALITY	VERSION 2019
ASHRAE 55	THERMAL COMFORT FOR HUMAN OCCUPANCY	VERSION 2017
ASHRAE G36	HIGH PERFORMANCE SEQUENCE OF OPERATIONS FOR HVAC SYSTEMS	VERSION 2018

2019 CALIFORNIA BUILDING CODE (FOR SFM) REFERENCED STANDARDS CH. 35

NFPA 13	AUTOMATIC SPRINKLER SYSTEMS (CALIFORNIA AMENDED)	2019 EDITION
NFPA 14	STANDPIPE SYSTEMS (CALIFORNIA AMENDED)	2019 EDITION
NFPA 17	DRY CHEMICAL EXTINGUISHING SYSTEMS	2017 EDITION
NFPA 17A	WET CHEMICAL EXTINGUISHING SYSTEMS	2017 EDITION
NFPA 20	STATIONARY PUMPS	2019 EDITION
NFPA 24	PRIVATE FIRE SERVICE MAINS (CALIFORNIA AMENDED)	2019 EDITION
NFPA 72	NATIONAL FIRE ALARM AND SIGNALING CODE (CALIFORNIA AMENDED) (NOTE: SEE UL STANDARD 1971 FOR "VISUAL DEVICES")	2019 EDITION
NFPA 80	FIRE DOOR AND OTHER OPENING PROTECTIVES	2019 EDITION
NFPA 253	CRITICAL RADIANT FLUX OF FLOOR COVERING SYSTEMS	2019 EDITION
NFPA 2001	CLEAN AGENT FIRE EXTINGUISHING SYSTEMS (CALIFORNIA AMENDED)	2018 EDITION

GENERAL NOTES

1. ALL CONSTRUCTION AND MATERIALS SHALL BE AS SPECIFIED AND IN ACCORDANCE WITH ALL APPLICABLE CODES, ORDINANCES, LAWS, PERMITS, AND THE CONTRACT DOCUMENTS.
2. THE CONTRACTOR SHALL BE RESPONSIBLE FOR THE ACCURATE PLACEMENT OF ALL NEW CONSTRUCTION ON THE SITE.
3. THE CONTRACTOR SHALL VERIFY ALL SITE CONDITIONS AND DIMENSIONS, AND EXACT LOCATIONS AND ELEVATIONS OF PIPING BEFORE STARTING WORK. SHOULD A DISCREPANCY APPEAR IN THE CONTRACT DOCUMENTS, OR BETWEEN THE CONTRACT DOCUMENTS AND EXISTING CONDITIONS, NOTIFY THE ARCHITECT AT ONCE FOR INSTRUCTION ON HOW TO PROCEED.
4. SEWER, WATER, AND STORM DRAIN SYSTEMS INDICATED IN THESE DRAWINGS SHALL EXTEND TO PLUMBING/CIVIL POINTS OF CONNECTION AT 5'-0" OUTSIDE OF THE BUILDING(S) UNLESS NOTED OTHERWISE. CONTINUATION OF THESE PIPING SYSTEMS ARE INDICATED ON THE CIVIL DRAWINGS WITH CORRESPONDING ASSOCIATED MATERIALS SPECIFIED UNDER A SEPARATE SECTION OF THE PROJECT SPECIFICATIONS. ALL SUCH PIPING SHALL BE INSTALLED IN A MANNER TO PROVIDE PROPER CONNECTION TO INVERT ELEVATIONS INDICATED ON CIVIL DRAWINGS. WHERE SIZES DIFFER BETWEEN PLUMBING AND CIVIL DRAWINGS, CONTRACTOR SHALL PROVIDE TRANSITION FITTINGS AS NECESSARY TO ALLOW FOR PROPER CONNECTION.
5. TRAPS FOR ALL LAVATORIES AND SINKS SHALL TRAP STRAIGHT BACK TO WALL WITH ALL REQUIRED OFFSETS HAPPENING WITHIN THE WALL.
6. HORIZONTAL SOIL, WASTE AND TRAP PRIMER PIPING WITHIN THE BUILDING SHALL BE INSTALLED CONCEALED WITHIN WALLS, BELOW FINISH FLOOR, OR BELOW FINISH SLAB AS APPLICABLE UNLESS NOTED OTHERWISE. ALL OTHER HORIZONTAL PIPING WITHIN THE BUILDING SHALL BE INSTALLED CONCEALED ABOVE CEILING OR WITHIN WALLS AS APPLICABLE UNLESS NOTED OTHERWISE. ALL VERTICAL PIPING SHALL BE INSTALLED CONCEALED WITHIN WALLS UNLESS NOTED OTHERWISE. NO PIPING SHALL BE INSTALLED IN EXPOSED LOCATIONS UNLESS SPECIFICALLY NOTED AS SUCH ON PLANS.
7. HORIZONTAL SOIL AND WASTE PIPING 4" AND GREATER IN SIZE SHALL SLOPE AT 1/8" PER FOOT UNLESS OTHERWISE NOTED. ALL SUCH PIPING 3" AND LESS IN SIZE SHALL SLOPE AT 1/4" PER FOOT UNLESS NOTED OTHERWISE.
8. HORIZONTAL STORM DRAIN AND OVERFLOW PIPING SHALL SLOPE AT 1/8" PER FOOT UNLESS NOTED OTHERWISE.
9. HORIZONTAL CONDENSATE PIPING SHALL SLOPE AT 1/8" PER FOOT UNLESS NOTED OTHERWISE.
10. PRIOR TO COMMENCING ANY WORK VERIFY ALL EQUIPMENT LOCATIONS WITH THE GENERAL CONTRACTOR, OTHER TRADES, ARCHITECT AND STRUCTURAL ENGINEER. EXACT ROUGH-IN LOCATIONS AND REQUIREMENTS SHALL BE COORDINATED IN THE FIELD.
11. PIPING BETWEEN EACH PLUMBING FIXTURE AND THE NEAREST BRANCH OR MAIN PIPING RUN SHALL BE SIZED TO MATCH THE CORRESPONDING FIXTURE SCHEDULE CONNECTION SIZE AT A MINIMUM UNLESS NOTED AS A LARGER SIZE ON PLANS. PIPE HEADERS IN WALLS SERVING BANKS OF FIXTURES SHALL BE FULL LINE SIZE FROM THE UPSTREAM END OF THE BRANCH LINE TO THE END TERMINAL UNLESS NOTED OTHERWISE.
12. REFER TO ARCHITECTURAL DRAWINGS FOR LOCATIONS, ROUGH IN DIMENSIONS, AND MOUNTING HEIGHTS OF ALL FIXTURES, EQUIPMENT, ACCESS PANELS, HOSE BIBBS, RECESSED HOSE BIBBS, OVERFLOW DRAIN TERMINATION POINTS, AND OTHER EXPOSED PLUMBING ELEMENTS. WHERE DIMENSIONS ARE NOT INDICATED, SEEK ARCHITECT'S DIRECTION AND/OR APPROVAL PRIOR TO INSTALLATION.
13. ACCESS PANELS
    A. WHERE POSSIBLE, USE SAME ACCESS PANEL FOR SHUT-OFF VALVES, MIXING VALVES, TRAP PRIMERS AND WATER HAMMER ARRESTORS AND/OR OTHER INTERIOR WALL COMPONENTS WHEN LOCATED DIRECTLY ADJACENT IN SAME IMMEDIATE VICINITY. SEE ARCHITECTURAL DRAWINGS FOR MOUNTING HEIGHTS.
    B. SEE SPECIFICATIONS FOR ACCESS PANEL REQUIREMENTS.
14. CLEANOUTS.
    A. INTERIOR CLEANOUTS SHALL BE WALL CLEANOUTS RATHER THAN FLOOR CLEANOUTS UNLESS OTHERWISE INDICATED, SHALL BE READILY ACCESSIBLE, AND SHALL BE CAREFULLY COORDINATED WITH CASEWORK, EQUIPMENT, AND OTHER ITEMS TO AVOID CONFLICT. NOT ALL REQUIRED CLEANOUTS ARE INDICATED ON PLANS. WALL CLEANOUTS IN FINISHED SPACES SHALL BE INSTALLED IN ACCESS PANELS.
    B. SEE SPECIFICATIONS FOR ACCESS PANEL REQUIREMENTS.
15. YARD BOX AND CLEANOUT COVERS SHALL BE CLEARLY STAMPED WITH "WATER", "GAS", OR "SEWER" AS APPLICABLE. VALVES SHALL BE INSTALLED AND PROPERLY POSITIONED WITHIN YARD BOX TO ALLOW FOR FULL RANGE OF OPERATION, MAINTENANCE, REPAIR, AND REPLACEMENT. ALL YARD BOXES AND CLEANOUT COVERS SHALL ALIGN WITH SCORED HARDSCAPE JOINTS PER LANDSCAPE PLANS. YARD BOX COVERS SHALL BE CONCRETE. SEWER CLEANOUT COVERS SHALL BE BRASS. REFER TO SPECIFICATIONS FOR ADDITIONAL INFORMATION.
16. VERIFY EXACT LOCATIONS OF ALL MECHANICAL AND/OR OTHER EQUIPMENT INSTALLED BY OTHERS AND REQUIRING PLUMBING CONNECTIONS PRIOR TO ORDERING OF MATERIALS OR INSTALLATION. COORDINATE EXACT ROUGH-IN LOCATIONS AND REQUIREMENTS WITH OTHER INSTALLING CONTRACTORS AS APPLICABLE PRIOR TO INSTALLATION.
17. ADA LAVATORIES AND SINKS SHALL BE PROVIDED WITH ADA INSULATED TRAP AND SUPPLY COVERS AS SPECIFIED.
18. ADA WATER CLOSETS SHALL BE INSTALLED WITH FLUSH VALVE ACTUATOR HANDLE LOCATED ON THE WHEEL CHAIR ACCESS SIDE.
19. ALL VALVES, UNIONS, CLEANOUTS, ETC. TO BE SAME SIZE AS PIPE UNLESS NOTED OTHERWISE.
20. REFER TO MECHANICAL DRAWINGS FOR MECHANICAL MANDATORY MEASURES AND ASSOCIATED REQUIREMENTS.
21. REFER TO ARCHITECTURAL DRAWINGS FOR LOCATIONS OF ALL FIRE RATED ASSEMBLIES. PROVIDE FIRESTOPPING AT PENETRATIONS THROUGH FIRE RETARDANT CONSTRUCTION IN ACCORDANCE WITH SPECIFICATIONS.
22. NO PIPING SHALL BE INCASED IN THE CONCRETE SLAB.
23. ALL VALVES, TRAP PRIMERS, WATER HAMMER ARRESTERS OR OTHER EQUIPMENT SHOWN IN WALLS OR ABOVE NON-ACCESSIBLE CEILINGS SHALL BE INSTALLED BEHIND AN ACCESS PANEL.
24. ALL PLUMBING FIXTURES AND EQUIPMENT SHALL BE CERTIFIED BY THE CALIFORNIA STATE ENERGY COMMISSION TO COMPLY WITH EFFICIENCY STANDARDS PER SECTION 2-5314(A) OF THE TITLE-24 REGULATIONS.
25. PIPING THROUGH FIRE RATED WALLS SHALL BE PER U.L. FIRE RESISTANCE SYSTEM NO. W1001. SEE ARCHITECTURAL PLANS FOR WALL LOCATIONS.
26. ALL UNDERGROUND IRON, COPPER OR STEEL PIPING LOCATED BOTH INSIDE AND OUTSIDE OF BUILDING SHALL BE ENCASED WITHIN A MINIMUM 10 MIL POLYETHYLENE PLASTIC SLEEVE SEALED WATER TIGHT WITH POLYVINYL CHLORIDE TAPE.
27. ALL POINTS OF CONNECTION SHALL BE COORDINATED WITH THE GENERAL CONTRACTOR PRIOR TO BID.
28. ALL HORIZONTAL PIPING LINES EXTENDED AND CONNECTED TO EQUIPMENT SHALL BE RUN AT THE HIGHEST POSSIBLE ELEVATIONS AND NOT LESS THAN 6" ABOVE THE FLOOR TO PROVIDE CLEARANCE FOR CLEANING. AT WALL OR COLUMN LOCATIONS, PIPING ROUGH-IN SHALL BE STUBBED IN WALLS WHENEVER POSSIBLE.
29. ALL CUTTING OF EXISTING PAVINGS, WALKS AND/OR FLOORS SHALL BE BY MACHINE SAW CUTTING. HOLES FOR PIPES IN CONCRETE WALLS OR FLOORS SHALL BE DONE BY CORE DRILLING EQUIPMENT.
30. ABOVE GROUND PIPING SYSTEMS SHALL BE MARKED IN ACCORDANCE WITH ASME A13.1.
31. UNLESS SPECIFICALLY SHOWN ON THESE PLANS NO STRUCTURAL MEMBERS SHALL BE CUT, DRILLED OR NOTCHED WITHOUT PRIOR WRITTEN AUTHORIZATION FROM THE STRUCTURAL ENGINEER AND THE DISTRICT STRUCTURAL ENGINEER FROM THE DIVISION OF THE STATE ARCHITECT.
32. ALL CONCEALED CONDENSATE DRAIN PIPING ABOVE CEILING SHALL BE INSULATED.
33. VENT PIPING SHALL TERMINATE NOT LESS THAN 10 FEET FROM, OR NOT LESS THAN 3 FEET ABOVE, AN OPENABLE WINDOW, DOOR, OPENING, AIR INTAKE, OR VENT SHAFT.
34. FIXTURES AND/OR EQUIPMENTS NOT SHOWN ON THE PLUMBING PLANS BUT SHOWN ON ARCHITECTURAL PLANS, OR WHERE SERVICE PIPING TO FIXTURES AND/OR EQUIPMENTS ARE NOT SHOWN, THE CONTRACTOR SHALL VERIFY WITH ARCHITECT THE TYPE OF FIXTURE AND PROVIDE PIPING AS REQUIRED. CONTRACTOR SHALL MAKE CONNECTIONS TO THE NEAREST SERVICE PIPING WITH SUFFICIENT SIZE SHOWN ON THE DRAWINGS AT NO ADDED COST TO THE OWNER. PIPING SHALL BE SIZED IN ACCORDANCE WITH THE LATEST APPLICABLE CODE.

ABBREVIATIONS

ABBREVIATION	DESCRIPTION
&	AND
@	AT
ABV	ABOVE
A/C	AIR CONDITIONING
ADA	AMERICANS WITH DISABILITIES ACT
AFF	ABOVE FINISH FLOOR
AHJ	AUTHORITY HAVING JURISDICTION
AP	ACCESS PANEL
APPROX	APPROXIMATELY
ARCH	ARCHITECT
ASD	AUTOMATIC SPRINKLER DRAIN
ASTM	AMERICAN SOCIETY FOR TESTING AND MATERIALS
AVTR	ACID VENT THRU ROOF
BEL	BELOW
BFF	BELOW FINISHED FLOOR
BFG	BELOW FINISHED GRADE
BFP	BACKFLOW PREVENTER
BLDG	BUILDING
BTUH	BRITISH THERMAL UNIT PER HOUR
CA	COMPRESSED AIR
CBC	CALIFORNIA BUILDING CODE, CURRENT EDITION
CD	CONDENSATE DRAIN
CEC	CALIFORNIA ELECTRICAL CODE, CURRENT EDITION
CFC	CALIFORNIA FIRE CODE, CURRENT EDITION
CFM	CUBIC FEET PER MINUTE
CFH	CUBIC FEET PER HOUR
CLG	CEILING
CMC	CALIFORNIA MECHANICAL CODE, CURRENT EDITION
CO	CLEANOUT
COMB	COMBUSTION
CONT	CONTINUATION
CONTR	CONTRACTOR
COTG	CLEAN OUT TO GRADE
CPC	CALIFORNIA PLUMBING CODE, CURRENT EDITION
CVTR	CONCENTRIC VENT THRU ROOF
CWD	CAN WASH DRAIN
CW	COLD WATER
(D)	DEMOLISH
DET	DETAIL
DEPT	DEPARTMENT
DIA	DIAMETER
DN	DOWN
DWG	DRAWING
Ø	DIAMETER
E	EAST
EA	EACH
EXIST	EXISTING
(E)	EXISTING
ELEC	ELECTRICAL
ENGR	ENGINEER
EOR	ENGINEER ON RECORD
ET	EXPANSION TANK
EXH	EXHAUST
F	FAHRENHEIT
FCO	FLOOR CLEAN OUT
FD	FLOOR DRAIN
FFE	FINISH FLOOR ELEVATION
FIN FLR	FINISH FLOOR
FIN GR	FINISH GRADE
FLR	FLOOR
FM	FACTORY MANUAL
FPS	FEET PER SECOND
FT	FOOT, FEET
FV	FLUSH VALVE
G	GAS
GA	GAUGE
GAL	GALLONS
GPM	GALLONS PER MINUTE
GVTR	GREASE VENT THRU ROOF
HDR	HEADER
HORIZ	HORIZONTAL
HBD	HOSE BIBB DRAINAGE
HP	HORSE POWER
HVAC	HEATING VENTILATION AND AIR CONDITIONING
HW	HOT WATER
HWR	HOT WATER RETURN
HZ	HERTZ
ICW	INDUSTRIAL COLD WATER
IE	INVERT ELEVATION
IN	INCHES
IN WC	INCHES WATER COLUMN
INT	INTEGRAL
IRR	IRRIGATION
KW	KILOWATT
LBS	POUNDS
MAX	MAXIMUM
MBH	THOUSAND BRITISH THERMAL UNITS PER HOUR
MC	MECHANICAL CONTRACTOR
MECH	MECHANICAL
MFR	MANUFACTURER
MPG	MEDIUM PRESSURE GAS
MIN	MINIMUM
N	NORTH
NA	NOT APPLICABLE
NIC	NOT IN CONTRACT
NFPA	NATIONAL FIRE PROTECTION ASSOCIATION
NO	NUMBER
NTS	NOT TO SCALE
OC	ON CENTER
OCD	OVERFLOW CONDENSATE DRAIN
OD	OVERFLOW DRAIN, OUTSIDE DIAMETER
P	PUMP
PCD	PUMPED CONDENSATE DRAIN
PH	PHASE
PLBG	PLUMBING
POC	POINT OF CONNECTION
POD	POINT OF DISCONNECTION
PRV	PRESSURE REDUCING VALVE
PSI	POUNDS PER SQUARE INCH
RO	REVERSE OSMOSIS
RPM	REVOLUTIONS PER MINUTE
RW	RECLAIMED WATER
S	SOUTH
SD	STORM DRAIN
SF	SQUARE FOOT
SHD	SHOWER DRAIN
SIM	SIMILAR
SPKLR	SPRINKLER
SCW	SOFT COLD WATER
SS	SANITARY SEWER
SST	STAINLESS STEEL
STD	STANDARD
STRUCT	STRUCTURAL
SYS	SYSTEM
TD	TRENCH DRAIN
TEMP	TEMPERATURE
THRU	THROUGH
T'STAT	THERMOSTAT
TW	TEMPERED WATER
TWR	TEMPERED WATER RETURN
TYP	TYPICAL
UL	UNDERWRITER'S LABORATORY
UNO	UNLESS NOTED OTHERWISE
VA	VACUUM
V	VENT
VBF	VENT BELOW FLOOR
VBG	VENT BELOW GRADE
VTR	SANITARY VENT THRU ROOF
W	WEST
W/	WITH
W/O	WITHOUT
WCO	WALL CLEANOUT
WC	WATER COLUMN
WT	WEIGHT
YB	YARD BOX

IDENTIFICATION STAMP
DIV. OF THE STATE ARCHITECT
APP: 02-119490 INC:
REVIEWED FOR
SS ☑ FLS ☑ ACS ☑
DATE: 09/13/2022

LPA
ARCHITECTURE ENGINEERING INTERIORS
LANDSCAPE ARCHITECTURE PLANNING

916-287-2400 Office
916-287-2401 Fax
LPADesignStudios.com
431 I Street,
Suite 107
Sacramento, California 95814

REGISTERED PROFESSIONAL ENGINEER CHRISTOPHER D. TATE M32973 12/31/2022 MECHANICAL STATE OF CALIFORNIA

This document and all other project documents, ideas, aesthetics and designs incorporated therein are instruments of service. All project documents are copyright protected, are the property of LPA, Inc. (LPA) and cannot be lawfully used in whole or in part for any project or purpose except as set forth in the contractual agreement between LPA and its Client. The unauthorized disclosure and/or use of the project documents (including the creation of derivative works), may give rise to liability for copyright infringement, unlawful disclosure, use or misappropriation of property rights held by LPA. The unauthorized use of the project documents will give rise to the recovery of monetary losses and damages including attorney fees and costs for which the unauthorized user will be held liable.
Project documents describe the design intent of the work and are not a representation of as-built or existing conditions. LPA is not responsible for any discrepancies between the project documents and the existing conditions.

© LPA, Inc.

DAVIS SR HIGH SCHOOL
AQUATICS CENTER
315 W 14TH ST., DAVIS, CA 95616

Developed for
DAVIS JOINT UNIFIED SCHOOL DISTRICT

Revision	Date

Submittal	Date
50% DD REVIEW	06/15/2021
100% DD SUBMITTAL	07/26/2021
50% CD REVIEW	10/08/2021
100% CD DSA SUBMITTAL	10/22/2021
DSA SUBMITTAL	03/24/2022

Job Number	1904413
Date Published	03/24/2022
Checked By	LPA
Scale	

PLUMBING LEGENDS AND GENERAL NOTES

P0.10

PLUMBING FIXTURE SCHEDULE

ITEM	MANUFACTURER	MODEL NO.	FIXTURE TYPE	GPM/GPF	ROUGH-IN CONNECTION SIZES (in) WASTE	VENT	COLD WATER	HOT WATER	GAS	ELECTRICAL VOLTAGE	AMPS	PHASE	kW	MOUNT	HARDWARE TYPE	DESCRIPTION	DETAIL REFERENCE
BFP-1	ZURN	375AST	BACKFLOW PREVENTER				3"									STAINLESS STEEL REDUCED PRESSURE PRINCIPLE ASSEMBLY.	
COTG	ZURN	Z1400	CLEANOUT TO GRADE													"LEVEL-TROL" ADJUSTABLE FLOOR CLEANOUT, DURA-COATED CAST IRON BODY, WITH GAS AND WATER TIGHT ABS TAPERED THREAD PLUG AND ROUND SCORIATED CAST IRON EXTRA-HEAVY-DUTY SECURED TOP ADJUSTABLE TO FINISHED FLOOR.	
DN-1	ZURN	Z199	DOWNSPOUT NOZZLE											WALL MOUNT		DOWNSPOUT NOZZLE, ALL NICKEL BRONZE BODY, NO-HUB INLET AND DECORATIVE FACE OF WALL FLANGE AND OUTLET NOZZLE.	
EEWS-1	HAWS	8300.158	EMERGENCY SHOWER AND EYEWASH				1 1/2"	1 1/2"						FLOOR MOUNT		MODEL 8300.158 COMBINATION SHOWER AND EYE/FACE WASH WITH AXION MSR HYDRODYMANIC SHOWERHEAD, STAINLESS STEEL 11" ROUND BOWL, STAINLESS STEEL EYEWASH YOKE ASSEMBLY WITH GREEN SOFT-FLOR ABS PLASTIC EYEWASH ANTI-SURGE HEADS WITH FLOW CONTROLS AND DUST COVERS, CHROME-PLATED BRASS STAY-OPEN SHOWER AND EYEWASH BALL VALVES EQUIPPED WITH STAINLESS STEEL BALL AND STEM.	
ET-1	ZURN	XT-8	THERMAL EXPANSION TANK				3/4"							WALL MOUNT		ZURN WILKINS, CARBON STEEL OUTER SHELL, NPT STAINLESS STEEL SYSTEM CONNECTION, 2.1 GALLONS.	
FCO	ZURN	Z1400-BZ	FLOOR CLEANOUT											FLOOR MOUNT		"LEVEL-TROL" ADJUSTABLE LEVELING FLOOR CLEANOUT, DURA-COATED CAST IRON BODY WITH GAS & WATER TIGHT ABS TAPERED THREAD PLUG, AND ROUND, SCORIATED SECURED LIGHT-DUTY TOP WITH ADDITIONAL LEVELING ADJUSTMENT TO FINSIHED FLOOR.	
FD-1	ZURN	Z415B-113	FLOOR DRAIN		2"	1 1/2"	1/2"							FLOOR MOUNT		FLOOR DRAIN, DURA-COATED CAST IRON BODY WITH BOTTOM OUTLET, COMBINATION INVERTIBLE MEMBRANE CLAMP AND ADJUSTABLE COLLAR WITH SEEPAGE SLOTS, NICKEL BRONZE HEAD, AND CBC "TYPE B" POLISHED STAINLESS STEEL HEEL-PROOF STRAINER WITH 1/4" SQUARE OPENINGS.	
FD-2	ZURN	Z662-HF	FLOOR DRAIN		6"	3"	1/2"							FLOOR MOUNT		16 SQUARE TOP HEAVY-DUTY DRAIN WITH HIGH FLOW DUCTILE IRON GRATE, DURA-COATED CAST IRON BODY WITH BOTTOM OUTLET, SEEPAGE PAN AND COMBINATION MEMBRANE FLASHING CLAMP AND FRAME FOR HEAVY-DUTY HIGH FLOW DUCTILE IRON GRATE WITH SUSPENDED SEDIMENT BUCKET.	
FD-3	ZURN	Z415BZ	FLOOR DRAIN		3"	2"	1/2"							FLOOR MOUNT		FLOOR DRAIN, DURA-COATED CAST IRON BODY WITH BOTTOM OUTLET, COMBINATION INVERTIBLE MEMBRANE CLAMP AND ADJUSTABLE COLLAR WITH SEEPAGE SLOTS, AND "TYPE BZ" POLISHED NICKEL BRONZE LEVELING STRAINER.	
FS-1	ZURN	Z1900	FLOOR SINK		2"	1 1/2"	1/2"							FLOOR MOUNT		SANI-FLOOR RECEPTOR 12"x12"x6" DEEP CAST IRON BODY AND SQUARE, LIGHT-DUTY GRATE WITH 1/2" SLOTTED OPENINGS, WHITE ACID RESISTANT PORCELAIN ENAMEL COATED INTERIOR & TOP, COMPLETE WITH WHITE ABS ANIT-SPLASH INTERIOR BOTTOM DOME STRAINER.	
GPR-1	AMERICAN METER COMPANY	1813C	GAS PRESSURE REGULATOR						3/4"							5.0 PSI INLET PRESSURE AND 6'-14" W.C OUTLET PRESSURE, 3/4" INLET & OUTLET, 1" VENT. <1/8" X 3/16" ORIFICE, & MAX FLOW RATE OF 275 CFH> <3/16" ORIFICE, & MAX FLOW RATE OF 500 CFH> < 1/4" ORIFICE, & MAX FLOW RATE OF 700 CFH> < 5/16" ORIFICE, & MAX FLOW RATE OF 800 CFH> < 3/8" ORIFICCE, & MAX FLOW RATE OF 950 CFH> <1/2" ORIFICE, & MAX FLOW RATE OF 1000 CFH> <9/16" ORIFICE, & MAX FLOW RATE OF 1200 CFH>, CAST GREY IRON BODY, COMPLETE W/ SHUT-OFF COCK AN DUNIONS. PROVIDE REDUCER FITTINGS AS NECESSARY FOR UPSTREAM AND DOWNSTREAM GAS CONNECTIONS.	
HB-1	ACORN	8126-LF	HOSE BIBB				3/4"							WALL MOUNT		HOSE VALVE WITH VACUUM BREAKER, HEAVY ROUGH BRASS BODY, FURNISHED WITH A LOCKSHIELD BONNET AND REMOVABLE LOOSE KEY WHEEL HANDLE.	
L-1	KOHLER	K-2007	LAVATORY, ADA	0.5 GPM	2"	1 1/2"	3/4"							WALL MOUNT	CHICAGO FAUCETS MODEL #333-E2805-665PSHAB	WALL-MOUNT AVATORY WITH CHICAGO FAUCETS MODEL #333-E2805-665PSHAB MANUAL FAUCET (0.5 GPM), AND MIFAB MODEL No. MC-41 FIXTURE CARRIER WITH CONCEALED ARMS - FILL ALL BASE HOLES WITH 3/8" DIA. HILTI KH-EZ WITH 2-1/2" EFFECTIVE EMBEDMENT (ICC ESR-3027). McGUIRE NO. LF2165 1/4 TURN, LOOSE KEY STOPS WITH RIGID SUPPLIES, McGUIRE NO. PW155WC DRAIN AND McGUIRE NO. PWV80890NCO P-TRAP. INSTALL IN ACCORDANCE WITH CBC 2019 ACCESSIBILITY REQUIREMENTS	
MS-1	KOHLER	K-6710 "WHITBY"	SERVICE SINK		3"	2"	3/4"	3/4"						FLOOR MOUNT	CHICAGO FAUCETS MODEL #445-897SRCXKCP	CAST IRON FLOOR MOUNTED CORNER BASIN, ACID-RESISTANT ENAMEL FINISH.	
MV-1	BRADLEY	S59-3045	MIXING VALVE				1 1/4"	1 1/4"								HL45 - THERMOSTATIC MIXING VALVE	
OD-1	ZURN	ZC125-3NH-89	OVERFLOW DRAIN											ROOF		8-3/8" DIAMETER OVERFLOW DRAIN, DURA-COATED CAST IRON BODY WITH COMBINATION MEMBRANE FLASHING CLAMP/GRAVEL GUARD AND LOW SILHOUETTE CAST IRON DOME.	
RD-1	ZURN	ZC125-3NH	ROOF DRAIN											ROOF		8-3/8" DIAMETER ROOF DRAIN, DURA-COATED CAST IRON BODY WITH COMBINATION MEMBRANE FLASHING CLAMP/GRAVEL GUARD AND LOW SILHOUETTE CAST IRON DOME.	
RHB-1	ACORN	8151	RECESSED HOSE BIBB				3/4"							RECESSED		STAINLESS STEEL RECESSED HOSE BOX WITH WALL FLANGE.	
S-1	DURCON	D50C	SINK	1.5 GPM	2"	1 1/2"	3/4"	3/4"						DROP-IN	CHICAGO FAUCETS MODEL #445-E35ABCP	DURCON EPOXY RESIN DROP-IN SINK	
SH-1	BRADLEY	COL-3C	COLUMN SHOWER				3/4"	3/4"						FLOOR MOUNT		3-PERSON COLUMN SHOWER	
SSV-1	PACIFIC SEISMIC PRODUCTS	VB-314(60)	SEISMIC SHUT-OFF VALVE						2"							1-1/2" MODEL VB-313(60) NPT VALVE, VERTICAL - BOTTOM IN FLOW, MAX. PRESSURE 60 PSI.	
TP-1	MIFAB	MR-500	TRAP PRIMER				1/2"									1/2" MALE NPT INLET AND 1/2" FEMALE NPT OUTLET & REMOVABLE FILTER SCREEN. INSTALL COMPLETE WITH WALL ACCESS PANEL, SHUT-OFF BALL VALVE, & 1/2" TYPE "L" COPPER DRAIN LINE FROM TRAP SEAL PRIMER OUTLET TO RECEPTOR CONNECTION POINT.	
UR-1	KOHLER	K-4991-ETSS	URINAL		2"	1 1/2"	1"							WALL MOUNT	SLOAN "ROYAL" MODEL #186-0.125 DBP	HIGH EFFICIENCY URINAL, VITREOUS CHINA, 0.125 GPF, WITH MIFAB MODEL No. MC-32 CARRIER - FILL ALL BASE HOLES WITH 3/8" DIA. HILTI KH-EZ WITH 2-1/2" EFFECTIVE EMBEDMENT (ICC ESR-3027).	
UR-2	KOHLER	K-4991-ETSS	URINAL, ADA		2"	1 1/2"	1"							WALL MOUNT	SLOAN "ROYAL" MODEL #186-0.125 DBP	HIGH EFFICIENCY URINAL, VITREOUS CHINA, 0.125 GPF, WITH MIFAB MODEL No. MC-32 CARRIER - FILL ALL BASE HOLES WITH 3/8" DIA. HILTI KH-EZ WITH 2-1/2" EFFECTIVE EMBEDMENT (ICC ESR-3027). INSTALL IN ACCORDANCE WITH ADA ACCESSIBILITY REQUIREMENTS.	
WC-1	KOHLER	K-96053-SSL	WATER CLOSET		4"	2"	1 1/2"							FLOOR MOUNT	SLOAN "ROYAL" MODEL #111-1.28	ELONGATED TOILET BOWL, VITREOUS CHINA, 1.28 GPF, WITH BEMIS MODEL NO. 1655SSCT WHITE ELONGATED OPEN FRONT LESS COVER EXTRA HEAVY-DUTY TOILET SEAT WITH "STA-TITE" FASTENING SYSTEM.	
WC-2	KOHLER	K-96057-SS	WATER CLOSET, ADA		4"	2"	1 1/2"							FLOOR MOUNT	SLOAN "ROYAL" MODEL #111-1.28	ELONGATED TOILET BOWL, VITREOUS CHINA, 1.28 GPF, WITH BEMIS MODEL NO. 1655SSCT WHITE ELONGATED OPEN FRONT LESS COVER EXTRA HEAVY-DUTY TOILET SEAT WITH "STA-TITE" FASTENING SYSTEM. INSTALL IN ACCORDANCE WITH ADA ACCESSIBILITY REQUIREMENTS.	
WCO	ZURN	Z1446	WALL CLEANOUT											WALL MOUNT		WALL CLEANOUT, DURA-COATED CAST IRON BODY WITH GAS & WATER TIGHT ABS TAPERED THREAD PLUG, AND ROUND, SMOOTH STAINLESS STEEL ACCESS COVER WITH SECURING SCREW.	
WHA-1	MIFAB	MWH-A	WATER HAMMER ARRESTOR				1/2"									PISTON OPERATED WATER HAMMER ARRESTOR WITH HARD DRAWN SEAMLESS "K" COPPER BODY, RYTON PPS PISTON WITH DOUBLE O-RINGS AND CDA 360 BRASS M.P.T. CONNECTION.	
WHA-2	MIFAB	MWH-B	WATER HAMMER ARRESTOR				1/2"									PISTON OPERATED WATER HAMMER ARRESTOR WITH HARD DRAWN SEAMLESS "K" COPPER BODY, RYTON PPS PISTON WITH DOUBLE O-RINGS AND CDA 360 BRASS M.P.T. CONNECTION.	

FUEL GAS PIPING

TABLE 1216.2(1)
SCHEDULE 40 METALLIC PIPE [NFPA 54: TABLE 6.2(b)][1, 2]

GAS: NATURAL
INLET PRESSURE: LESS THAN 2 psi
PRESSURE DROP: 0.5 in. w.c.
SPECIFIC GRAVITY: 0.60

NOMINAL:	½	¾	1	1¼	1½	2	2½	3	4	5	6	8	10	12
ACTUAL ID:	0.622	0.824	1.049	1.380	1.610	2.067	2.469	3.068	4.026	5.047	6.065	7.981	10.020	11.938
LENGTH (feet)	CAPACITY IN CUBIC FEET OF GAS PER HOUR													
10	172	360	678	1390	2090	4020	6400	11 300	23 100	41 800	67 600	139 000	252 000	399 000
20	118	247	466	957	1430	2760	4400	7780	15 900	28 700	46 500	95 500	173 000	275 000
30	95	199	374	768	1150	2220	3530	6250	12 700	23 000	37 300	76 700	139 000	220 000
40	81	170	320	657	985	1900	3020	5350	10 900	19 700	31 900	65 600	119 000	189 000
50	72	151	284	583	873	1680	2680	4740	9660	17 500	28 300	58 200	106 000	167 000
60	65	137	257	528	791	1520	2430	4290	8760	15 800	25 600	52 700	95 700	152 000
70	60	126	237	486	728	1400	2230	3950	8050	14 600	23 600	48 500	88 100	139 000
80	56	117	220	452	677	1300	2080	3670	7490	13 600	22 000	45 100	81 900	130 000
90	52	110	207	424	635	1220	1950	3450	7030	12 700	20 600	42 300	76 900	122 000
100	50	104	195	400	600	1160	1840	3260	6640	12 000	19 500	40 000	72 600	115 000
125	44	92	173	355	532	1020	1630	2890	5890	10 600	17 200	35 400	64 300	102 000
150	40	83	157	322	482	928	1480	2610	5330	9650	15 600	32 100	58 300	92 300
175	37	77	144	296	443	854	1360	2410	4910	8880	14 400	29 500	53 600	84 900
200	34	71	134	275	412	794	1270	2240	4560	8260	13 400	27 500	49 900	79 000
250	30	63	119	244	366	704	1120	1980	4050	7320	11 900	24 300	44 200	70 000
300	27	57	108	221	331	638	1020	1800	3670	6630	10 700	22 100	40 100	63 400
350	25	53	99	203	305	587	935	1650	3370	6100	9880	20 300	36 900	58 400
400	23	49	92	189	283	546	870	1540	3140	5680	9190	18 900	34 300	54 300
450	22	46	86	177	266	512	816	1440	2940	5330	8620	17 700	32 200	50 900
500	21	43	82	168	251	484	771	1360	2780	5030	8150	16 700	30 400	48 100
550	20	41	78	159	239	459	732	1290	2640	4780	7740	15 900	28 900	45 700
600	19	39	74	152	228	438	699	1240	2520	4560	7380	15 200	27 500	43 600
650	18	38	71	145	218	420	669	1180	2410	4360	7070	14 500	26 400	41 800
700	17	36	68	140	209	403	643	1140	2320	4190	6790	14 000	25 300	40 100
750	17	35	66	135	202	389	619	1090	2230	4040	6540	13 400	24 400	38 600
800	16	34	63	130	195	375	598	1060	2160	3900	6320	13 000	23 600	37 300
850	16	33	61	126	189	363	579	1020	2090	3780	6110	12 600	22 800	36 100
900	15	32	59	122	183	352	561	992	2020	3660	5930	12 200	22 100	35 000
950	15	31	58	118	178	342	545	963	1960	3550	5760	11 800	21 500	34 000
1000	14	30	56	115	173	333	530	937	1910	3460	5600	11 500	20 900	33 100
1100	14	28	53	109	164	316	503	890	1810	3280	5320	10 900	19 800	31 400
1200	13	27	51	104	156	301	480	849	1730	3130	5070	10 400	18 900	30 000
1300	12	26	49	100	150	289	460	813	1660	3000	4860	9980	18 100	28 700
1400	12	25	47	96	144	277	442	781	1590	2880	4670	9590	17 400	27 600
1500	11	24	45	93	139	267	426	752	1530	2780	4500	9240	16 800	26 600
1600	11	23	44	89	134	258	411	727	1480	2680	4340	8920	16 200	25 600
1700	11	22	42	86	130	250	398	703	1430	2590	4200	8630	15 700	24 800
1800	10	22	41	84	126	242	386	682	1390	2520	4070	8370	15 200	24 100
1900	10	21	40	81	122	235	375	662	1350	2440	3960	8130	14 800	23 400
2000	NA	20	39	79	119	229	364	644	1310	2380	3850	7910	14 400	22 700

For SI units: 1 inch = 25 mm, 1 foot = 304.8 mm, 1 cubic foot per hour = 0.0283 m^3/h, 1 pound-force per square inch = 6.8947 kPa, 1 inch water column = 0.249 kPa

Notes:

[1] Table entries are rounded to 3 significant digits.

[2] NA means a flow of less than 10 ft^3/h (0.283 m^3/h).

1. ALL GAS PIPING DOWNSTREAM OF PRESSURE REGULATOR TO BE SIZED PER CPC TABLE 1216.2(1).
2. INSTALL AUTOMATIC EARTHQUAKE SHUT-OFF VALVE & REGULATOR AS REQUIRED.
3. GAS METER LOCATIONS VARY. PLUMBING CONTRACTOR TO COORDINATE GAS PIPE ROUTING FROM GAS METERS TO ANY STEP-DOWN PRESSURE REGULATORS.

FUEL GAS PIPING

TABLE 1216.2(6)
SCHEDULE 40 METALLIC PIPE [NFPA 54: TABLE 6.2(g)]*

GAS: NATURAL
INLET PRESSURE: 5.0 psi
PRESSURE DROP: 3.5 psi
SPECIFIC GRAVITY: 0.60

NOMINAL:	½	¾	1	1¼	1½	2	2½	3	4
ACTUAL ID:	0.622	0.824	1.049	1.380	1.610	2.067	2.469	3.068	4.026
LENGTH (feet)	CAPACITY IN CUBIC FEET OF GAS PER HOUR								
10	3190	6430	11 800	24 200	36 200	69 700	111 000	196 000	401 000
20	2250	4550	8320	17 100	25 600	49 300	78 600	139 000	283 000
30	1840	3720	6790	14 000	20 900	40 300	64 200	113 000	231 000
40	1590	3220	5880	12 100	18 100	34 900	55 600	98 200	200 000
50	1430	2880	5260	10 800	16 200	31 200	49 700	87 900	179 000
60	1300	2630	4800	9860	14 800	28 500	45 400	80 200	164 000
70	1200	2430	4450	9130	13 700	26 400	42 000	74 300	151 000
80	1150	2330	4260	8540	12 800	24 700	39 300	69 500	142 000
90	1060	2150	3920	8050	12 100	23 200	37 000	65 500	134 000
100	979	1980	3620	7430	11 100	21 400	34 200	60 400	123 000
125	876	1770	3240	6640	9950	19 200	30 600	54 000	110 000
150	786	1590	2910	5960	8940	17 200	27 400	48 500	98 900
175	728	1470	2690	5520	8270	15 900	25 400	44 900	91 600
200	673	1360	2490	5100	7650	14 700	23 500	41 500	84 700
250	558	1170	2200	4510	6760	13 000	20 800	36 700	74 900
300	506	1060	1990	4090	6130	11 800	18 800	33 300	67 800
350	465	973	1830	3760	5640	10 900	17 300	30 600	62 400
400	433	905	1710	3500	5250	10 100	16 100	28 500	58 100
450	406	849	1600	3290	4920	9480	15 100	26 700	54 500
500	384	802	1510	3100	4650	8950	14 300	25 200	51 500
550	364	762	1440	2950	4420	8500	13 600	24 000	48 900
600	348	727	1370	2810	4210	8110	12 900	22 900	46 600
650	333	696	1310	2690	4030	7770	12 400	21 900	44 600
700	320	669	1260	2590	3880	7460	11 900	21 000	42 900
750	308	644	1210	2490	3730	7190	11 500	20 300	41 300
800	298	622	1170	2410	3610	6940	11 100	19 600	39 900
850	288	602	1130	2330	3490	6720	10 700	18 900	38 600
900	279	584	1100	2260	3380	6520	10 400	18 400	37 400
950	271	567	1070	2190	3290	6330	10 100	17 800	36 400
1000	264	551	1040	2130	3200	6150	9810	17 300	35 400
1100	250	524	987	2030	3030	5840	9320	16 500	33 600
1200	239	500	941	1930	2900	5580	8890	15 700	32 000
1300	229	478	901	1850	2770	5340	8510	15 000	30 700
1400	220	460	866	1780	2660	5130	8180	14 500	29 500
1500	212	443	834	1710	2570	4940	7880	13 900	28 400
1600	205	428	806	1650	2480	4770	7610	13 400	27 400
1700	198	414	780	1600	2400	4620	7360	13 000	26 500
1800	192	401	756	1550	2330	4480	7140	12 600	25 700
1900	186	390	734	1510	2260	4350	6930	12 300	25 000
2000	181	379	714	1470	2200	4230	6740	11 900	24 300

For SI units: 1 inch = 25 mm, 1 foot = 304.8 mm, 1 cubic foot per hour = 0.0283 m^3/h, 1 pound-force per square inch = 6.8947 kPa

* Table entries are rounded to 3 significant digits.

1. ALL GAS PIPING UPSTREAM OF PRESSURE REGULATOR TO BE SIZED PER CPC TABLE 1216.2(6).
2. INSTALL AUTOMATIC EARTHQUAKE SHUT-OFF VALVE & REGULATOR AS REQUIRED.
3. GAS METER LOCATIONS VARY. PLUMBING CONTRACTOR TO COORDINATE GAS PIPE ROUTING FROM GAS METERS TO ANY STEP-DOWN PRESSURE REGULATORS.

GAS WATER HEATER SCHEDULE

ITEM	MANUFACTURER	MODEL NO.	LOCATION	STORAGE CAPACITY (GAL.)	INCOMING CW TEMP (DEG. F.)	OUTGOING HW TEMP (DEG. F.)	TEMP RISE (DEG. F.)	RECOVERY (GAL/HR)	FLUE SIZE (in)	INPUT (CFH)	EFFICIENCY (%)	OPERATING WEIGHT (LBS)	DESCRIPTION	DETAIL REFERENCE
GWH-1	BOCK OPTITHERM	OT200N-A	POOL MECHANICAL 1001	100	60	120	60	228	4	199	98	1,943	MODULATING CONDENSING COMMERCIAL WATER HEATER, ULTRA-LOW NOX, WITH CONDENSATE NEUTRALIZER KIT #57000	09/P6.10

ELECTRIC WATER HEATER SCHEDULE

ITEM	MANUFACTURER	MODEL NO.	LOCATION	STORAGE CAPACITY (GAL.)	INCOMING CW TEMP (DEG. F.)	OUTGOING HW TEMP (DEG. F.)	TEMP RISE (DEG. F.)	RECOVERY (GAL/HR)	OPERATING WEIGHT (LBS)	ELECTRICAL VOLTAGE	AMPS	PHASE	kW	DESCRIPTION	DETAIL REFERENCE
EWH-1	BOCK NDURANCE	LCE40-2	CUSTODIAL 1010	40	60	120	60	40	556	208 V	0 A	3	6.0	COMMERCIAL ELECTRIC WATER HEATER, 3.0/3.0 kW SIMULTANEOUS	01/P6.10, 05/S6.92

CIRCULATING PUMP SCHEDULE

ITEM	MANUFACTURER	MODEL NO.	LOCATION	TYPE	CAPACITY GPM	HEAD	ELECTRICAL VOLTAGE	AMPS	PHASE	kW	HP	RPM	OPERATING WEIGHT (LBS)	DESCRIPTION	DETAIL REFERENCE
CP-1	GRUNDFOS	UP 15-42 B7	CUSTODIAL 1010, POOL MECHANICAL 1001	CIRCULATOR PUMP	18	16	115 V	1 A	1		1/25		6.7	WET-ROTOR, IN-LINE, SINGLE STAGE, MAINTENANCE FREE, CIRCULATOR PUMP, 145 PSI MAX. SYSTEM PRESSURE	02/P6.10

BOOSTER PUMP SCHEDULE

ITEM	SYSTEM SERVED	LOCATION	MANUFACTURER	MODEL NO.	DESIGN	SYSTEM PERFORMANCE: FLOW RATE (GPM) (each pump)	SUCTION PRESSURE (PSI)	SYSTEM SET PRESSURE (PSI)	HEADER SIZE (in)	PUMP PERFORMANCE: GPM	PUMP HEAD (TDH)	BOOST PRESSURE (PSI)	MOTOR: HP	MOTOR ENCL.	RPM	VOLTAGE	PHASE	ESTIMATED WEIGHT (LBS)	DESCRIPTION	DETAIL REFERENCE
BP-1	DOMESTIC WATER	POOL MECHANICAL 1001	QUANTUMFLO	QES4-50-160-1.5	DUPLEX	131	33	37.23	4	80	21.32	9.23	1.5	TEFC	1,750	460 V	3	463	FIXTURE: 187 WFU, FIXTURE GPM: 80 GPM, REDUNDANCY FACTOR: 70%, ADDITIONAL GPM: 150 GPM POOL FILTER BACKWASH CYCLE.	03/S6.92

ELECTRIC TRAP PRIMER SCHEDULE

ITEM	MANUFACTURER	MODEL NO.	LOCATION	INLET SIZE	ELECTRICAL VOLTAGE	AMPS	PHASE	kW	EQUIPMENT SIZE	DESCRIPTION	DETAIL REFERENCE
ETP-1	PRECISION PLUMBING PRODUCTS	PT-6	BOYS RESTROOM 1014, CUSTODIAL 1010	3/4"	120 V	2 A	1		14"W x 16"H x 3-3/8"W	ELECTRONIC TRAP PRIMING ASSEMBLY, 6 OPENINGS, FLUSH MOUNT, WITH D-1416SS ACCESS DOOR, CYLINDER KEY LOCK, AND 1/2" COMPRESSION CONNECTION PORTS.	
ETP-2	PRECISION PLUMBING PRODUCTS	PTS-6	POOL MECHANICAL 1001	3/4"	120 V	2 A	1		12"W x 12"H x 4" NEMA-1	ELECTRONIC TRAP PRIMING ASSEMBLY, 6 OPENINGS, SURFACE MOUNT CABINET WITH COVER PLATE, AND 1/2" COMPRESSION CONNECTION PORTS.	
ETP-3	J.R. SMITH	273-B	CUSTODIAL 1010	1/2"	120 V				18" HEIGHT	273-B SERIES ELECTRONIC TRAP PRIMNG DEVICE WITH SURFACE MOUNT ENCLOSURE (NEMA 1 BOX).	

DOMESTIC HOT & COLD WATER PIPE SIZING CALCULATIONS

MAX. SYSTEM INLET PRESSURE
MAX. PRESSURE AT WATER METER INLET = 70 PSI (BOOSTER PUMP SET PRESSURE 70 PSI)
MIN. SYSTEM INLET PRESSURE
MIN. PRESSURE AT WATER METER INLET = 70 PSI

SYSTEM PRESSURE LOSSES
PRESSURE REQUIRED AT FARTHEST FIXTURE: = 25 PSI
PRESSURE LOSS DUE TO HEIGHT: = 6.5 PSI
PRESSURE LOSS THROUGH METER: = - PSI
PRESSURE LOSS THROUGH BACKFLOW: = - PSI
OTHER LOSSES:
- P.R.V. =

TOTAL PRESSURE LOSSES = 31.5 PSI

PRESSURE AVAILABLE FOR PIPE SIZING
(MIN. SYSTEM INLET PRESSURE - SYSTEM PRESSURE LOSSES)
70 PSI - 31.5 PSI = 38.5 PSI

PIPE SIZING
PRESSURE AVAILABLE FOR PIPE SIZING = 38.5 PSI
ACTUAL LENGTH OF SYSTEM = 383 FT.
DEVELOPED LENGTH OF SYSTEM (383 FT. x 1.25 MULTIPLIER) = 479 FT.

AVERAGE PRESSURE DROP
(PRESSURE AVAILABLE FOR SIZING) x 100 FT. / (DEVELOPED LENGTH OF SYSTEM) = 38.5 PSI x 100 FT. / 479 FT. = 8.04 PSI / 100 FT. AVERAGE

SUMMARY

DOMESTIC COLD WATER PIPE SIZES BASED ON 8.04 PSI LOSS PER 100 FT. OR 8 FT. PER SECOND VELOCITY, WHICHEVER RESTRICTION IS GREATER.

DOMESTIC HOT WATER PIPE SIZES BASED ON 8.04 PSI LOSS PER 100 FT. OR 5 FT. PER SECOND VELOCITY, WHICHEVER RESTRICTION IS GREATER.

DOMESTIC COLD WATER PIPE SIZING
(PER CPC TABLE A-2 & CHART A-4)
FRICTION LOSS **8.04** PSI PER 100 FEET, MAX 8 FPS

PIPE SIZE	FIXTURE UNITS FLUSH TANK	FLUSH VALVE	VELOCITY (FPS)	G.P.M.
1/2"	3	0	8.0	3
3/4"	15	0	8.0	11
1"	24	0	8.0	17
1-1/4"	42	8	8.0	25
1-1/2"	63	18	8.0	34
2"	123	46	8.0	49
2-1/2"	254	132	8.0	76
3"	479	365	8.0	120
4"	809	775	8.0	180
6"	2,670	2,670	8.0	400

DOMESTIC HOT WATER PIPE SIZING
(PER CPC TABLE A-2 & CHART A-4)
FRICTION LOSS 8.0**4** PSI PER 100 FEET, MAX 5 FPS

PIPE SIZE	FIXTURE UNITS FLUSH TANK	FLUSH VALVE	VELOCITY (FPS)	G.P.M.
1/2"	3	0	5.0	3
3/4"	10	0	5.0	8
1"	20	0	5.0	14
1-1/4"	26	0	5.0	18
1-1/2"	39	0	5.0	24
2"	78	0	5.0	38
2-1/2"	135	0	5.0	52
3"	284	0	5.0	82
4"	479	0	5.0	120
6"	1,583	0	5.0	280

DOMESTIC WATER CALCULATION

PIPE MATERIALS SCHEDULE

SERVICES	LOCATION	MATERIAL
DOMESTIC WATER	COLD WATER	HARD COPPER TUBE, ASTM B88, TYPE L WATER TUBE, DRAWN TEMPER. WROUGHT-COPPER SOLDER-JOINT FITTINGS (VIEGA PRESS FITTINGS ARE AN ACCEPTABLE SUBSTITUTION FOR SOLDER JOINTS), ASME B16.22, WROUGHT-COPPER PRESSURE FITTINGS.
	BELOW FLOOR	SOFT COPPER TUBE, ASTM B88, TYPE K WATER TUBE, ANNEALED TEMPER. COPPER SOLDER-JOINT FITTINGS, ASME B16.22, WROUGHT-COPPER PRESSURE FITTINGS. ENCASE WITHIN A HIGH DENSITY CROSS LAMINATED POLYETHYLENE FILM, MINIMUM 10 MIL THICK, TUBE FORM, ASTM 1674 OR AWWA C105, FOR PROTECTION AGAINST CORROSION.
	HOT WATER	SAME AS COLD WATER ABOVE COMPLETE WITH 1" THICK ONE-PIECE PRE-FORMED GLASS FIBER MOLDED PIPE INSULATION WITH ALL PURPOSE FIRE RETARDANT VAPOR BARRIER JACKET FOR 1" DIAMETER PIPES AND SMALLER, AND 1-1/2" THICK INSULATION FOR 1-1/4" DIAMETER AND LARGER PIPES. (VIEGA PRESS FITTINGS ARE AN ACCEPTABLE SUBSTITUTION FOR SOLDER JOINTS).
GAS	EXTERIOR ABOVE GRADE	2-INCHES & SMALLER HOT-DIP GALVANIZED PIPE, SCHEDULE 40, ASTM A53, TYPE F, GRADE A, THREADED, COMPLYING WITH ASME B1.20.1, WITH MALLEABLE-IRON THREADED FITTINGS, ASME B16.3, CLASS 150. 2.5-INCHES AND LARGER BLACK STEEL HOT-DIP GALVANIZED PIPE, SCHEDULE 40, ASTM A53/A53M WITH ASTM A 234/A234M WROUGHT STEEL WELDED FITTINGS.
	INTERIOR ABOVE GRADE	2-INCHES & SMALLER BLACK STEEL PIPE, SCHEDULE 40, ASTM A53, TYPE F, GRADE A, THREADED, COMPLYING WITH ASME B1.20.1, WITH MALLEABLE-IRON THREADED FITTINGS, ASME B16.3, CLASS 150. 2.5-INCHES AND LARGER BLACK STEEL PIPE, SCHEDULE 40, ASTM A53/A53M WITH ASTM A 234/A234M WROUGHT STEEL WELDED FITTINGS.
	BELOW GRADE	2-INCHES & SMALLER POLYETHYLENE PIPE, ASTM D2513, SDR 11. PE FITTINGS, ASTM D 2683, SOCKET-FUSION TYPE OR ASTM D 3261, BUTT-FUSION TYPE. 2.5-INCHES AND LARGER BLACK STEEL PIPE, SCHEDULE 40, ASTM A53/A53M WITH ASTM A 234/A234M WROUGHT STEEL WELDED FITTINGS, WRAP WITH 4 MIL POLYETHYLENE SLEEVE FOR CORROSION PROTECTION.
CONDENSATE DRAIN	ON ROOF	HARD DRAWN COPPER DWV TUBE, ASTM B 306, DRAINAGE TUBE, DRAWN TEMPER. COPPER DRAINAGE DWV FITTINGS, ASME B16.23, CAST COPPER OR ASME B16.29, WROUGHT COPPER, SOLDER-JOINT FITTINGS.
	WITHIN BUILDING	SAME AS ABOVE EXCEPT WITH 1-INCH THICK FLEXIBLE ELASTOMERIC, COMPLYING WITH ASTM C534/C534M GRADE 1; USE TUBULAR MATERIAL WHEREVER POSSIBLE.
STORM / OVERFLOW DRAIN	ABOVE FLOOR	HUBLESS CAST IRON PIPE AND FITTINGS, ASTM A 888 OR CISPI 301, SHIELDED COUPLINGS ASTM C 1540, HEAVY-DUTY, 4-BAND SHIELDED, STAINLESS-STEEL COUPLINGS AND ASTM C 564 RUBBER SLEEVE.
	BELOW FOOR	SAME AS ABOVE ENCASED WITHIN A MINIMUM OF 10 MIL POLYETHYLENE PLASTIC SLEEVE SEALED WATER TIGHT WITH POLYVINYL CHLORIDE TAPE.
SANITARY WASTE	ABOVE FLOOR	HUBLESS CAST IRON PIPE AND FITTINGS, ASTM A 888 OR CISPI 301, SHIELDED COUPLINGS ASTM C 1540, HEAVY-DUTY, 4-BAND SHIELDED, STAINLESS-STEEL COUPLINGS AND ASTM C 564 RUBBER SLEEVE.
	BELOW FLOOR	SAME AS ABOVE ENCASED WITHIN A MINIMUM OF 10 MIL POLYETHYLENE PLASTIC SLEEVE SEALED WATER TIGHT WITH POLYVINYL CHLORIDE TAPE.
SANITARY VENT	ABOVE FLOOR	HUBLESS CAST IRON PIPE AND FITTINGS, ASTM A 888 OR CISPI 301, SHIELDED COUPLINGS ASTM C 1277, STANDARD-DUTY, 2-BAND SHIELDED, STAINLESS-STEEL COUPLINGS AND ASTM C 564 RUBBER SLEEVE.
	BELOW FLOOR	SAME AS ABOVE ENCASED WITHIN A MINIMUM OF 10 MIL POLYETHYLENE PLASTIC SLEEVE SEALED WATER TIGHT WITH POLYVINYL CHLORIDE TAPE.

NOTES:
1. ALL BRAZED AND SOLDERED JOINTS SHALL BE LEAD FREE. EXPOSED VENT PIPE SHALL BE GALVANIZED PER SPECIFICATIONS.
2. ALL METALLIC PIPING BELOW GRADE SHALL BE ENCASED WITH 10 MIL MINIMUM POLYETHYLENE PLASTIC SLEEVE. ALL FITTINGS, VALVES, ETC. THAT ARE NOT ABLE TO BE ENCASED WITHIN SLEEVE SHALL PROVIDE HEAVY OF "HENRY'S" OIL BASE ROOF MASTIC OVER ENTIRE SURFACE AND WRAPPED ENTIRE COMPONENT BY 10 MIL FERGUSON POLYETHYLENE WRAP WITH OVERLAPPED 50% OF THE CIRCUMFERENCE. SECURE ENDS AND SEAMS BY 3M SCOTCH, 10 MIL, 2" WIDE PIPE WRAP SEALING TAPE. INSTALL PER MANUFACTURER'S RECOMMENDATIONS.

IDENTIFICATION STAMP
DIV. OF THE STATE ARCHITECT
APP: 02-119490 INC:
REVIEWED FOR
SS ☑ FLS ☑ ACS ☑
DATE: 09/13/2022

LPA

ARCHITECTURE ENGINEERING INTERIORS
LANDSCAPE ARCHITECTURE PLANNING

916-287-2400 Office
916-287-2401 Fax
LPADesignStudios.com

431 I Street,
Suite 107
Sacramento, California 95814

REGISTERED PROFESSIONAL ENGINEER
CHRISTOPHER D. TINDALL
M32973
12/31/2022
MECHANICAL
STATE OF CALIFORNIA

This document and all other project documents, ideas, aesthetics and designs incorporated therein are instruments of service. All project documents are copyright protected, are the property of LPA, Inc. (LPA) and cannot be lawfully used in whole or in part for any project or purpose except as set forth in the contractual agreement between LPA and its Client. The unauthorized disclosure and/or use of the project documents (including the creation of derivative works), may give rise to liability for copyright infringement, unlawful disclosure, use or misappropriation of property rights held by LPA. The unauthorized use of the project documents will give rise to the recovery of monetary losses and damages including attorney fees and costs for which the unauthorized user will be held liable.
Project documents describe the design intent of the work and are not a representation of as-built or existing conditions. LPA is not responsible for any discrepancies between the project documents and the existing conditions.

© LPA, Inc.

DAVIS SR HIGH SCHOOL
AQUATICS CENTER
315 W 14TH ST., DAVIS, CA 95616

Developed for
DAVIS JOINT UNIFIED SCHOOL DISTRICT

Revision	Date

Submittal	Date
50% DD REVIEW	06/15/2021
100% DD SUBMITTAL	07/26/2021
50% CD REVIEW	10/08/2021
100% CD DSA SUBMITTAL	10/22/2021
DSA SUBMITTAL	03/24/2022

Job Number	1904413
Date Published	03/24/2022
Checked By	LPA
Scale	

PLUMBING SCHEDULES

P0.20

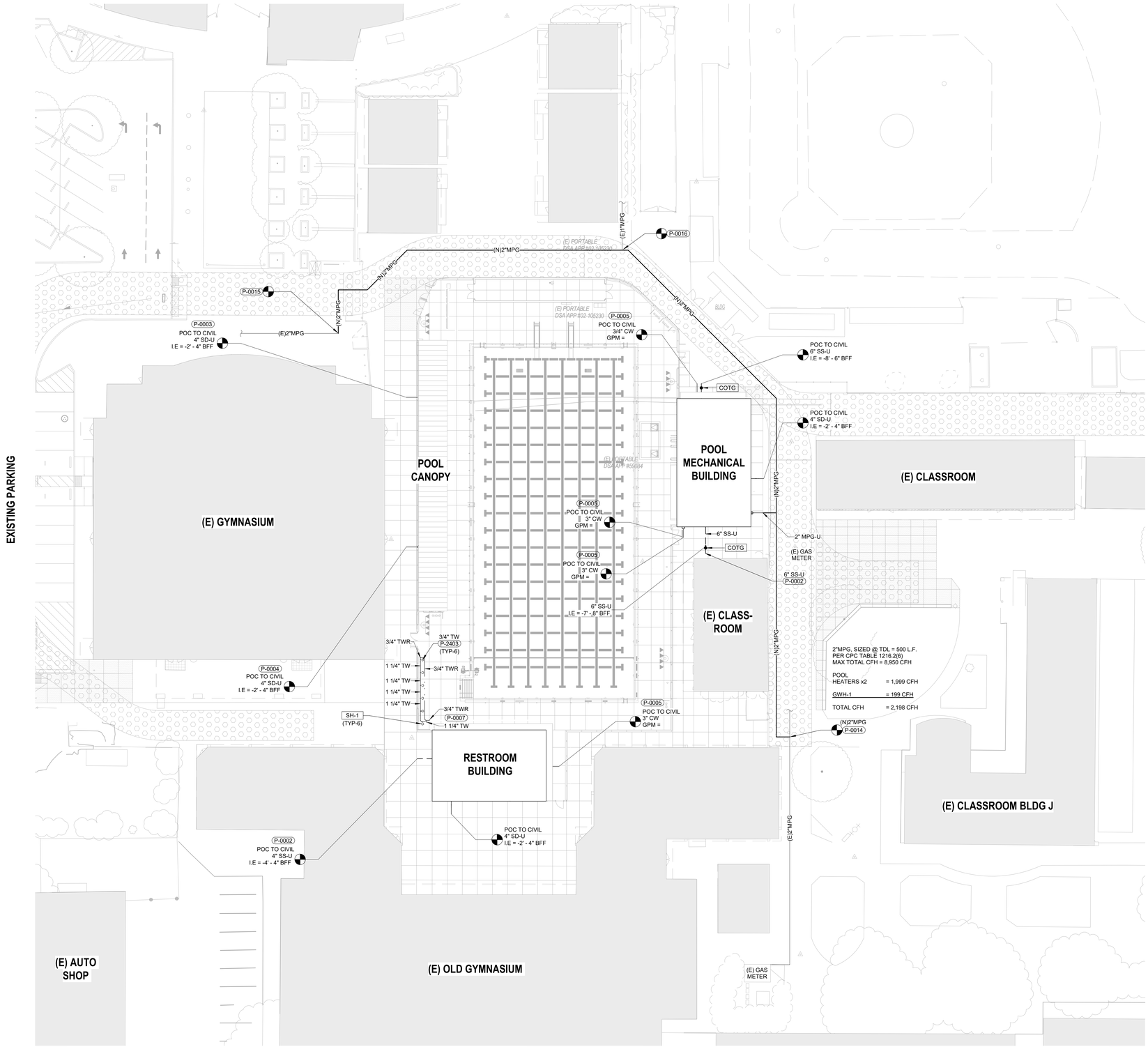

KEYNOTES

ITEM	DESCRIPTION
P-0002	POC SANITARY SEWER WITH CIVIL. SEE CIVIL UTILITY PLAN C4.03 FOR CONTINUATION.
P-0003	POC STORM DRAIN WITH CIVIL. SEE STORM DRAIN PLAN C3.02 FOR CONTINUATION.
P-0004	POC STORM DRAIN WITH CIVIL. SEE STORM DRAIN PLAN C3.03 FOR CONTINUATION.
P-0005	POC DOMESTIC COLD WATER WITH CIVIL. SEE CIVIL UTILITY PLAN C4.03 FOR CONTINUATION.
P-0007	SEE SHEET P2.14 FOR CONTINUATION.
P-0014	POC NEW 2"MPG TO EXISTING 2"MPG PIPING BELOW GRADE, FIELD VERIFY EXACT LOCATION PRIOR TO BID.
P-0015	APPROXIMATE LOCATION OF EXISTING 2"MPG, POC TO NEW 2"MPG PIPING BELOW FINISHED GRADE. FIELD VERIFY EXACT LOCATION OF EXISTING 2"MPG PRIOR TO BID.
P-0016	APPROXIMATE LOCATION OF EXISTING 1"MPG, POC TO NEW 2"MPG PIPING BELOW FINISHED GRADE. FIELD VERIFY EXACT LOCATION OF EXISTING 1"MPG PRIOR TO BID.
P-2403	3/4" TEMPERED WATER UP FROM BELOW POOL DECK, ROUGH-IN AND CONNECT TO SHOWER (SH-1).

PLAN NOTES

1. PLAN NOTES

KEY PLAN

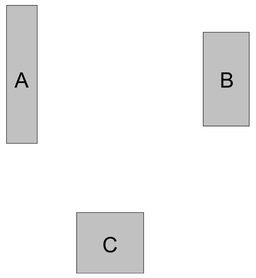

0 - PLUMBING SITE PLAN | 1" = 20'-0" | 05

IDENTIFICATION STAMP
DIV. OF THE STATE ARCHITECT
APP: 02-119490 INC:
REVIEWED FOR
SS ☑ FLS ☑ ACS ☑
DATE: 09/13/2022

LPA

ARCHITECTURE ENGINEERING INTERIORS
LANDSCAPE ARCHITECTURE PLANNING

916-287-2400 Office

916-287-2401 Fax

LPADesignStudios.com

431 I Street,
Suite 107
Sacramento, California 95814

REGISTERED PROFESSIONAL ENGINEER
CHRISTOPHER D. TAYLOR
M32973
12/31/2022
MECHANICAL
STATE OF CALIFORNIA

This document and all other project documents, ideas, aesthetics and designs incorporated therein are instruments of service. All project documents are copyright protected, are the property of LPA, Inc. (LPA) and cannot be lawfully used in whole or in part for any project or purpose except as set forth in the contractual agreement between LPA and its Client. The unauthorized disclosure and/or use of the project documents (including the creation of derivative works), may give rise to liability for copyright infringement, unlawful disclosure, use or misappropriation of property rights held by LPA. The unauthorized use of the project documents will give rise to the recovery of monetary losses and damages including attorney fees and costs for which the unauthorized user will be held liable.
Project documents describe the design intent of the work and are not a representation of as-built or existing conditions. LPA is not responsible for any discrepancies between the project documents and the existing conditions.

© LPA, Inc.

DAVIS SR HIGH SCHOOL
AQUATICS CENTER
315 W 14TH ST., DAVIS, CA 95616

Developed for
DAVIS JOINT UNIFIED SCHOOL DISTRICT

Revision	Date

Submittal	Date
50% DD REVIEW	06/15/2021
100% DD SUBMITTAL	07/26/2021
50% CD REVIEW	10/08/2021
100% CD DSA SUBMITTAL	10/22/2021
DSA SUBMITTAL	03/24/2022

Job Number	1904413
Date Published	03/24/2022
Checked By	LPA
Scale	As indicated

PLUMBING SITE PLAN

P1.01

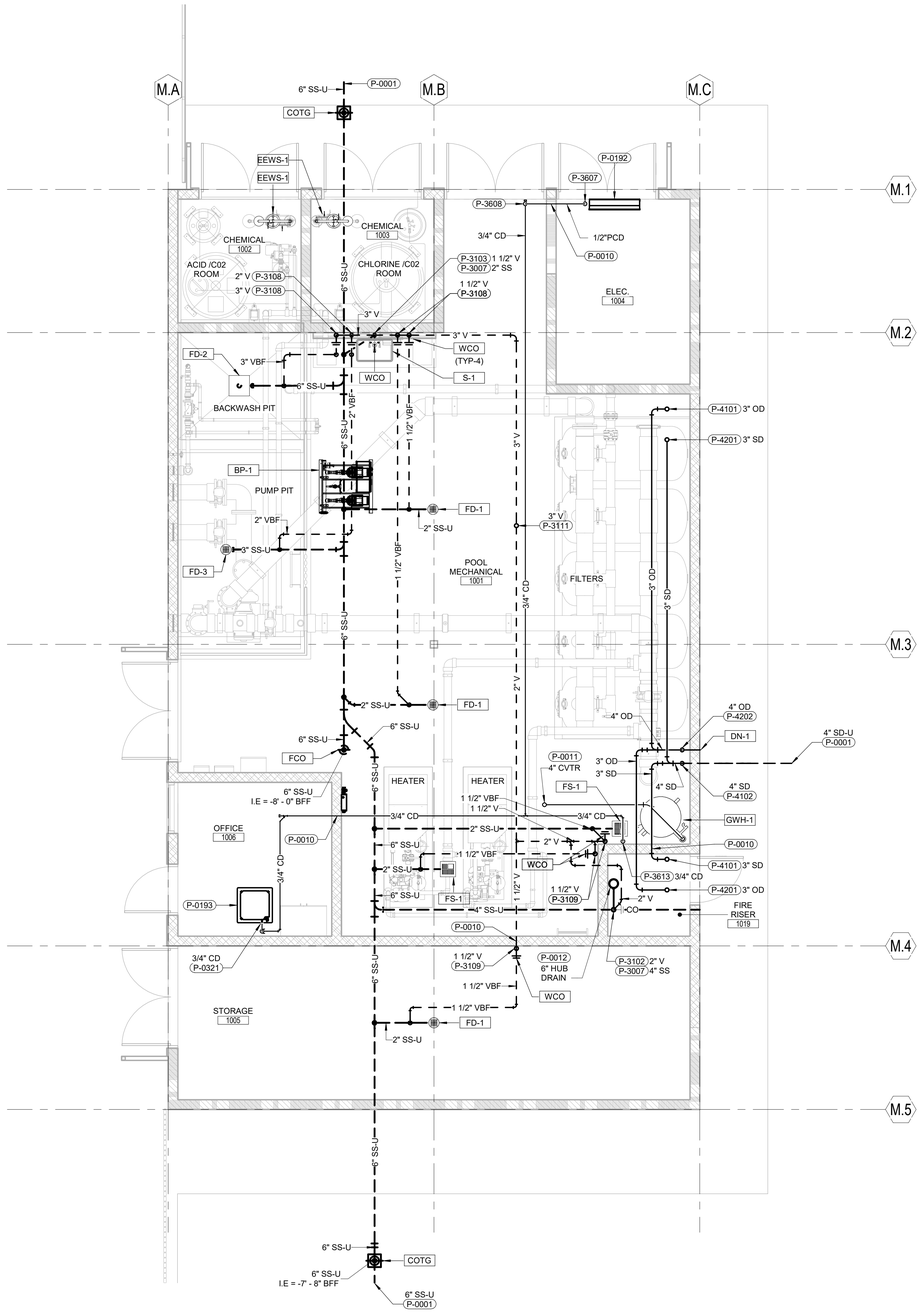

1 - POOL MECHANICAL DRAINAGE PLAN | 1/4" = 1'-0" | 05

KEYNOTES

ITEM	DESCRIPTION
P-0001	REFER TO PLUMBING SITE PLAN SHEET P1.01 FOR CONTINUATION.
P-0010	SEE STRUCTURAL DETAIL 01/S6.62 FOR PIPE PENETRATIONS AT MASONRY WALL.
P-0011	SEE DETAIL 11/P6.10 FOR MORE INFORMATION.
P-0012	SEE DETAIL 12/P6.10 FOR MORE INFORMATION.
P-0192	MECHANICAL WALL MOUNTED UNIT SHOWN FOR REFERENCE ONLY. PROVIDE PLUMBING CONNECTIONS AS NOTED. SEE MECHANICAL DRAWINGS FOR ADDITIONAL INFORMATION.
P-0193	MECHANICAL CEILING MOUNTED UNIT SHOWN FOR REFERENCE ONLY. PROVIDE PLUMBING CONNECTIONS AS NOTED. SEE MECHANICAL DRAWINGS FOR ADDITIONAL INFORMATION.
P-0321	POC CONDENSATE PIPING TO MECHANICAL UNIT WITH CONDENSATE TRAP, SEE DETAIL #04/P6.10.
P-3007	SANITARY SOIL/WASTE DOWN TO BELOW FINISHED FLOOR WITH CLEANOUT AT BASE.
P-3102	SANITARY VENT UP TO ABOVE CEILING.
P-3103	SANITARY VENT UP IN FURRED WALL TO ABOVE CEILING.
P-3108	SANITARY VENT UP IN FURRED WALL FROM BELOW FLOOR TO ABOVE CEILING, PROVIDE CLEANOUT ON RISE.
P-3109	SANITARY VENT UP FROM BELOW FLOOR TO ABOVE CEILING, PROVIDE CLEANOUT ON RISE.
P-3111	SANITARY VENT UP TO VENT THRU ROOF.
P-3607	ROUTE 1/2" PUMPED CONDENSATE DRAIN (PCD) FROM FAN COIL UNIT UP TO ABOVE CEILING SPACE. SEE DETAIL #03/P6.10.
P-3608	1/2" PCD IN CEILING SPACE, CONNECT TO TOP QUADRANT OF GRAVITY FED 3/4" CONDENSATE DRAIN. SEE DETAIL #03/P6.10.
P-3613	CONDENSATE DOWN TO POINT OF DISCHARGE OVER FLOOR SINK WITH MIN 2" AIR GAP.
P-4101	STORM DRAIN DOWN THRU ROOF TO CEILING SPACE.
P-4102	STORM DRAIN DOWN TO BELOW FINISHED GRADE WITH CLEANOUT AT BASE.
P-4201	OVERFLOW DRAIN DOWN THRU ROOF TO CEILING SPACE.
P-4202	OVERFLOW DRAIN DOWN TIGHT TO WALL, DAYLIGHT 1'-6" ABOVE FINISHED GRADE WITH DOWNSPOUT NOZZLE (DN-1). SEE ARCHITECTURAL DETAIL 09/A8.01 FOR MORE INFORMATION.

LEGEND

- METAL STUD WALL CONSTRUCTION
- 1 HOUR RATED MASONRY WALL CONSTRUCTION
- 1 HOUR RATED MASONRY WALL CONSTRUCTION
- MASONRY WALL CONSTRUCTION

PLAN NOTES

1. REFER TO STRUCTURAL DETAIL 01/S6.62 FOR PIPE PENETRATIONS AT MASONRY WALL.

KEY PLAN

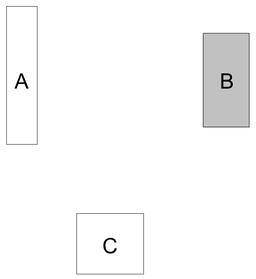

IDENTIFICATION STAMP
DIV. OF THE STATE ARCHITECT
APP: 02-119490 INC:
REVIEWED FOR
SS ☑ FLS ☑ ACS ☑
DATE: 09/13/2022

LPA
ARCHITECTURE ENGINEERING INTERIORS
LANDSCAPE ARCHITECTURE PLANNING

916-287-2400 Office
916-287-2401 Fax
LPADesignStudios.com
431 I Street,
Suite 107
Sacramento, California 95814

REGISTERED PROFESSIONAL ENGINEER
CHRISTOPHER D. TRUITT
M32973
12/31/2022
MECHANICAL
STATE OF CALIFORNIA

This document and all other project documents, ideas, aesthetics and designs incorporated therein are instruments of service. All project documents are copyright protected, are the property of LPA, Inc. (LPA) and cannot be lawfully used in whole or in part for any project or purpose except as set forth in the contractual agreement between LPA and its Client. The unauthorized disclosure and/or use of the project documents (including the creation of derivative works), may give rise to liability for copyright infringement, unlawful disclosure, use or misappropriation of property rights held by LPA. The unauthorized use of the project documents will give rise to the recovery of monetary losses and damages including attorney fees and costs for which the unauthorized user will be held liable.
Project documents describe the design intent of the work and are not a representation of as-built or existing conditions. LPA is not responsible for any discrepancies between the project documents and the existing conditions.

© LPA, Inc.

DAVIS SR HIGH SCHOOL
AQUATICS CENTER
315 W 14TH ST., DAVIS, CA 95616

Developed for
DAVIS JOINT UNIFIED SCHOOL DISTRICT

Revision	Date

Submittal	Date
50% DD REVIEW	06/15/2021
100% DD SUBMITTAL	07/26/2021
50% CD REVIEW	10/08/2021
100% CD DSA SUBMITTAL	10/22/2021
DSA SUBMITTAL	03/24/2022

Job Number	1904413
Date Published	03/24/2022
Checked By	LPA
Scale	As indicated

PLUMBING - POOL MECHANICAL BUILDING DRAINAGE PLAN

P2.11

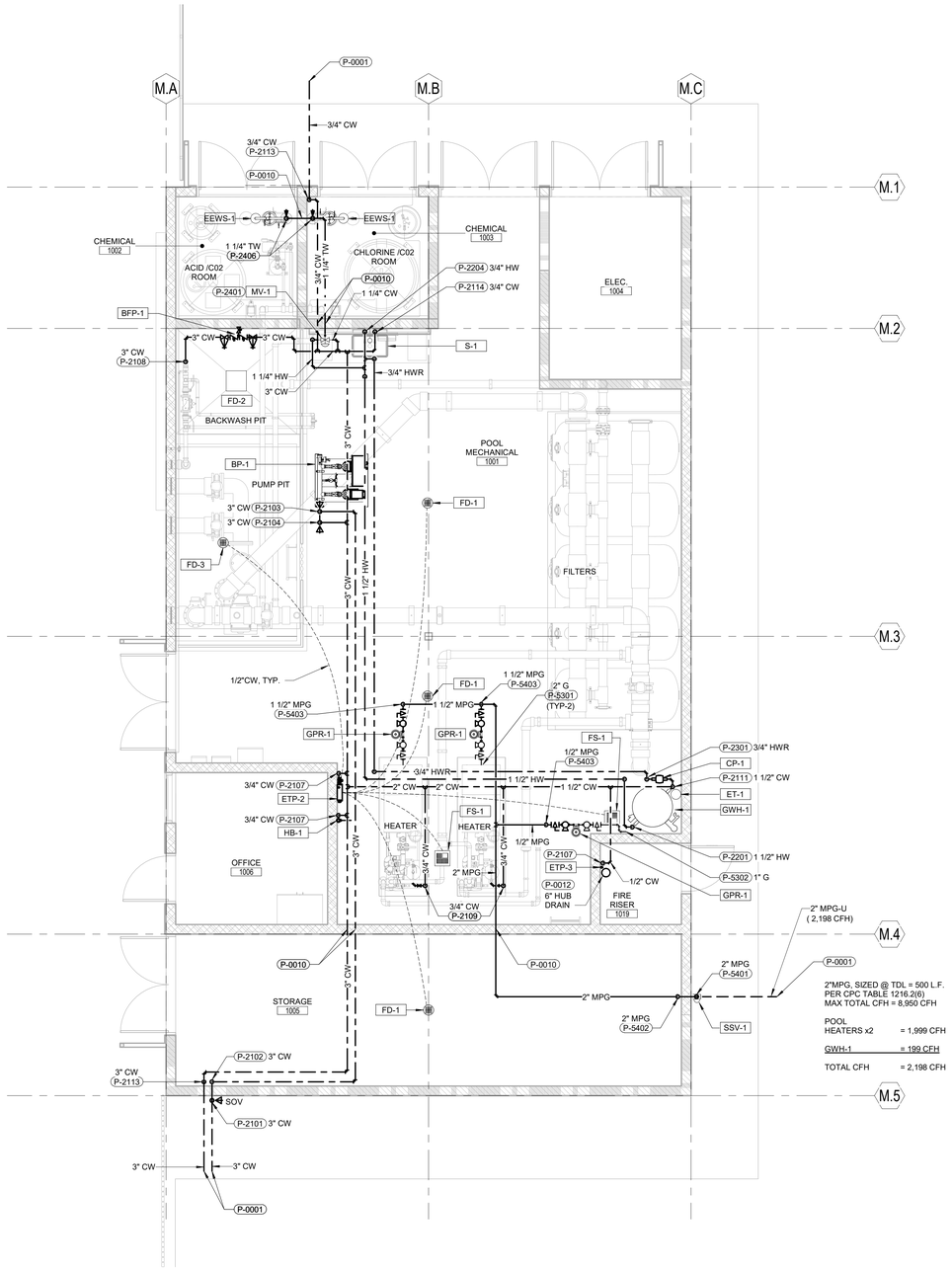

1 - POOL MECHANICAL WATER PLAN | 1/4" = 1'-0" | 05

KEYNOTES

ITEM	DESCRIPTION
P-0001	REFER TO PLUMBING SITE PLAN SHEET P1.01 FOR CONTINUATION.
P-0010	SEE STRUCTURAL DETAIL 01/S6.62 FOR PIPE PENETRATIONS AT MASONRY WALL.
P-0012	SEE DETAIL 12/P6.10 FOR MORE INFORMATION.
P-2101	COLD WATER UP TIGHT TO WALL TO 2'-0" ABOVE FINISHED GRADE WITH SHUT-OFF BALL VALVE ON RISE.
P-2102	COLD WATER UP TO ABOVE CEILING.
P-2103	COLD WATER DOWN TO BOOSTER PUMP (BP-1), ROUGH-IN AND CONNECT.
P-2104	ROUTE COLD WATER FROM BOOSTER PUMP (BP-1) UP TO ABOVE CEILING.
P-2107	COLD WATER DOWN TO FIXTURE, ROUGH-IN AND CONNECT.
P-2108	COLD WATER DOWN TO POOL FILL SYSTEM, ROUGH-IN AND CONNECT. REFER TO POOL DRAWINGS FOR MORE INFORMATION.
P-2109	COLD WATER DOWN TO POOL HEATER, ROUGH-IN AND CONNECT. REFER TO POOL DRAWINGS FOR MORE INFORMATION.
P-2111	COLD WATER DOWN TO GAS WATER HEATER, ROUGH-IN AND CONNECT.
P-2113	COLD WATER DOWN TO BELOW FINISHED FLOOR.
P-2114	COLD WATER DOWN IN FURRED WALL TO FIXTURE, ROUGH-IN AND CONNECT.
P-2201	HOT WATER FROM GWH-1 UP TO ABOVE CEILING.
P-2204	HOT WATER DOWN IN FURRED WALL TO FIXTURE, ROUGH-IN AND CONNECT.
P-2301	HOT WATER RETURN DOWN TO CP-1.
P-2401	ROUGH-IN AND CONNECT 1-1/4"CW & 1-1/4"HW TO MIXING VALVE (MV-1). ROUTE 1-1/4" TEMPERED WATER ABOVE CEILING SPACE.
P-2406	1-1/4" TEMPERED WATER DOWN, ROUGH-IN AND CONNECT TO EMERGENCY SHOWER AND EYEWASH (EEWS-1).
P-5301	GAS PIPING TO POOL HEATER, ROUGH-IN AND CONNECT WITH SHUT-OFF GAS COCK, DIRT LEG, AND FLEXIBLE CONNECTION. REFER TO POOL DRAWINGS FOR MORE INFORMATION.
P-5302	GAS PIPING TO GAS WATER HEATER (GWH-1), ROUGH-IN AND CONNECT WITH SHUT-OFF GAS COCK, DIRT LEG, AND FLEXIBLE CONNECTION.
P-5401	MEDIUM PRESSURE GAS UP TO 2'-0" ABOVE FINISHED GRADE WITH SHUT-OFF GAS COCK AND SEISMIC SHUT-OFF VALVE (SSV-1) ON RISE. SEE DETAIL 20/P6.10.
P-5402	MEDIUM PRESSURE GAS UP TO ABOVE CEILING.
P-5403	MEDIUM PRESSURE GAS DOWN TO GAS PRESSURE REGULATOR (GPR-1).

LEGEND

- METAL STUD WALL CONSTRUCTION
- 1 HOUR RATED MASONRY WALL CONSTRUCTION
- 1 HOUR RATED MASONRY WALL CONSTRUCTION
- MASONRY WALL CONSTRUCTION

PLAN NOTES

1. REFER TO STRUCTURAL DETAIL 01/S6.62 FOR PIPE PENETRATIONS AT MASONRY WALL.

KEY PLAN

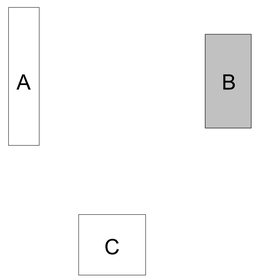

IDENTIFICATION STAMP
DIV. OF THE STATE ARCHITECT
APP: 02-119490 INC:
REVIEWED FOR
SS ☑ FLS ☑ ACS ☑
DATE: 09/13/2022

LPA
ARCHITECTURE ENGINEERING INTERIORS
LANDSCAPE ARCHITECTURE PLANNING

916-287-2400 Office
916-287-2401 Fax
LPADesignStudios.com
431 I Street,
Suite 107
Sacramento, California 95814

REGISTERED PROFESSIONAL ENGINEER
CHRISTOPHER D. TATE
M32973
12/31/2022
MECHANICAL
STATE OF CALIFORNIA

This document and all other project documents, ideas, aesthetics and designs incorporated therein are instruments of service. All project documents are copyright protected, are the property of LPA, Inc. (LPA) and cannot be lawfully used in whole or in part for any project or purpose except as set forth in the contractual agreement between LPA and its Client. The unauthorized disclosure and/or use of the project documents (including the creation of derivative works), may give rise to liability for copyright infringement, unlawful disclosure, use or misappropriation of property rights held by LPA. The unauthorized use of the project documents will give rise to the recovery of monetary losses and damages including attorney fees and costs for which the unauthorized user will be held liable.
Project documents describe the design intent of the work and are not a representation of as-built or existing conditions. LPA is not responsible for any discrepancies between the project documents and the existing conditions.

© LPA, Inc.

DAVIS SR HIGH SCHOOL
AQUATICS CENTER
315 W 14TH ST., DAVIS, CA 95616

Developed for
DAVIS JOINT UNIFIED SCHOOL DISTRICT

Revision	Date

Submittal	Date
50% DD REVIEW	06/15/2021
100% DD SUBMITTAL	07/26/2021
50% CD REVIEW	10/08/2021
100% CD DSA SUBMITTAL	10/22/2021
DSA SUBMITTAL	03/24/2022

Job Number	1904413
Date Published	03/24/2022
Checked By	LPA
Scale	As indicated

PLUMBING - POOL MECHANICAL BUILDING WATER PLAN

P2.12

KEYNOTES

ITEM	DESCRIPTION
P-0001	REFER TO PLUMBING SITE PLAN SHEET P1.01 FOR CONTINUATION.
P-0103	ROUTE FULL SIZE PRESSURE & TEMPERATURE RELIEF DRAIN TO POINT OF DISCHARGE OVER MOP SINK WITH MIN 2" AIR GAP.
P-0192	MECHANICAL WALL MOUNTED UNIT SHOWN FOR REFERENCE ONLY. PROVIDE PLUMBING CONNECTIONS AS NOTED. SEE MECHANICAL DRAWINGS FOR ADDITIONAL INFORMATION.
P-3006	SANITARY SOIL/WASTE DOWN TO BELOW FINISHED FLOOR.
P-3007	SANITARY SOIL/WASTE DOWN TO BELOW FINISHED FLOOR WITH CLEANOUT AT BASE.
P-3102	SANITARY VENT UP TO ABOVE CEILING.
P-3104	SANITARY VENT UP FROM BELOW FLOOR WITH CLEANOUT ON RISE, INTERCONNECT TO VENT HEADER.
P-3105	PROVIDE CLEANOUT ABOVE URINAL FLUSH VALVE ASSEMBLY.
P-3107	SANITARY VENT UP IN WALL FROM BELOW FLOOR TO ABOVE CEILING, PROVIDE CLEANOUT ON RISE.
P-3108	SANITARY VENT UP IN FURRED WALL FROM BELOW FLOOR TO ABOVE CEILING. PROVIDE CLEANOUT ON RISE.
P-3109	SANITARY VENT UP FROM BELOW FLOOR TO ABOVE CEILING, PROVIDE CLEANOUT ON RISE.
P-3110	INTERCONNECT FIXTURE VENTS AND ROUTE TO ABOVE CEILING.
P-3111	SANITARY VENT UP TO VENT THRU ROOF.
P-3607	ROUTE 1/2" PUMPED CONDENSATE DRAIN (PCD) FROM FAN COIL UNIT UP TO ABOVE CEILING SPACE. SEE DETAIL #03/P6.10.
P-3608	1/2" PCD IN CEILING SPACE, CONNECT TO TOP QUADRANT OF GRAVITY FED 3/4" CONDENSATE DRAIN. SEE DETAIL #03/P6.10.
P-3612	CONDENSATE DOWN IN WALL TO POINT OF DISCHARGE OVER MOP SINK WITH MIN 2" AIR GAP.
P-4101	STORM DRAIN DOWN THRU ROOF TO CEILING SPACE.
P-4102	STORM DRAIN DOWN TO BELOW FINISHED GRADE WITH CLEANOUT AT BASE.
P-4201	OVERFLOW DRAIN DOWN THRU ROOF TO CEILING SPACE.
P-4203	OVERFLOW DRAIN DOWN IN WALL, DAYLIGHT 1'-6" ABOVE FINISHED GRADE WITH DOWNSPOUT NOZZLE (DN-1). SEE ARCHITECTURAL DETAIL 09/A8.01 FOR MORE INFORMATION.

LEGEND

- METAL STUD WALL CONSTRUCTION
- 1 HOUR RATED MASONRY WALL CONSTRUCTION
- 1 HOUR RATED MASONRY WALL CONSTRUCTION
- MASONRY WALL CONSTRUCTION

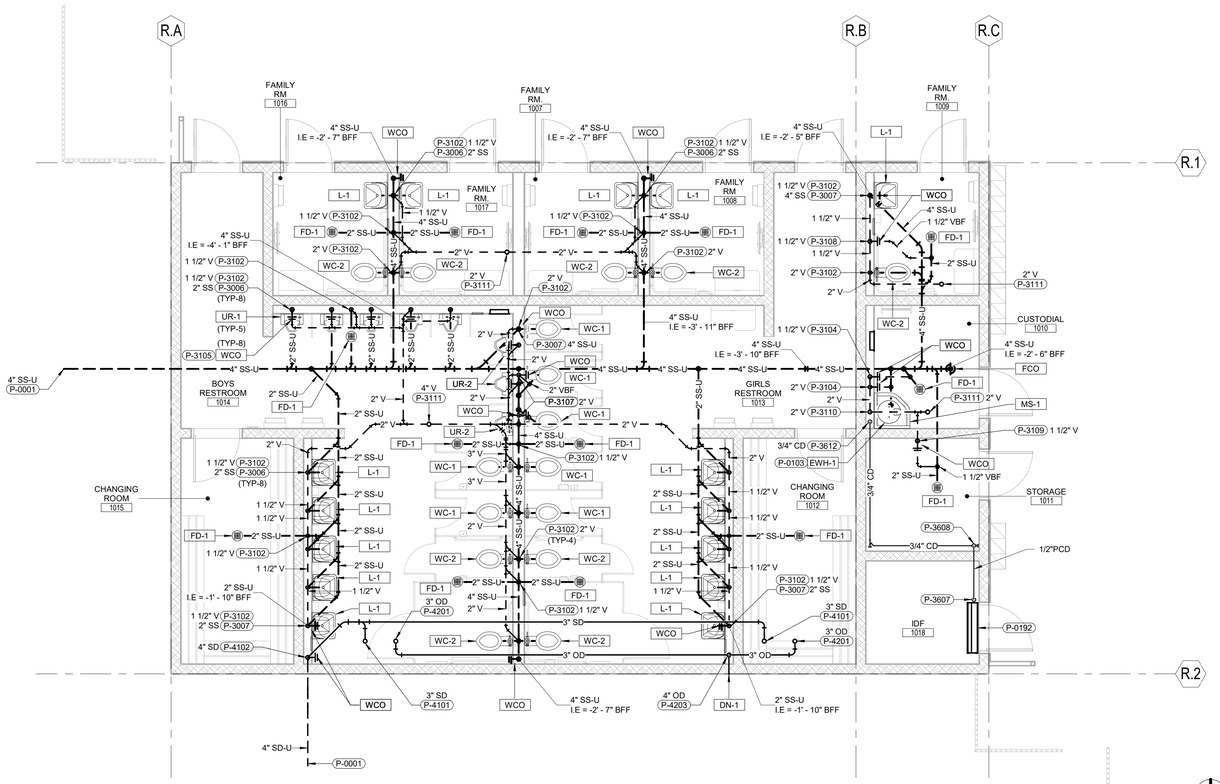

1 - BOYS & GIRLS RR DRAINAGE PLAN | 1/4" = 1'-0" | 05

IDENTIFICATION STAMP
DIV. OF THE STATE ARCHITECT
APP: 02-119490 INC:
REVIEWED FOR
SS ☑ FLS ☑ ACS ☑
DATE: 09/13/2022

LPA

ARCHITECTURE ENGINEERING INTERIORS
LANDSCAPE ARCHITECTURE PLANNING

916-287-2400 Office
916-287-2401 Fax
LPADesignStudios.com
431 I Street,
Suite 107
Sacramento, California 95814

REGISTERED PROFESSIONAL ENGINEER
CHRISTOPHER D. TATE
M32973
12/31/2022
MECHANICAL
STATE OF CALIFORNIA

This document and all other project documents, ideas, aesthetics and designs incorporated therein are instruments of service. All project documents are copyright protected, are the property of LPA, Inc. (LPA) and cannot be lawfully used in whole or in part for any project or purpose except as set forth in the contractual agreement between LPA and its Client. The unauthorized disclosure and/or use of the project documents (including the creation of derivative works), may give rise to liability for copyright infringement, unlawful disclosure, use or misappropriation of property rights held by LPA. The unauthorized use of the project documents will give rise to the recovery of monetary losses and damages including attorney fees and costs for which the unauthorized user will be held liable.
Project documents describe the design intent of the work and are not a representation of as-built or existing conditions. LPA is not responsible for any discrepancies between the project documents and the existing conditions.

© LPA, Inc.

PLAN NOTES

1. REFER TO STRUCTURAL DETAIL 01/S6.62 FOR PIPE PENETRATIONS AT MASONRY WALL.

KEY PLAN

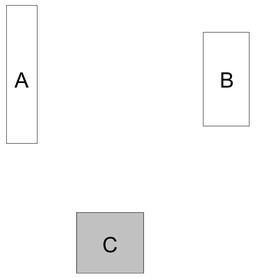

DAVIS SR HIGH SCHOOL
AQUATICS CENTER
315 W 14TH ST., DAVIS, CA 95616

Developed for
DAVIS JOINT UNIFIED SCHOOL DISTRICT

Revision	Date

Submittal	Date
50% DD REVIEW	06/15/2021
100% DD SUBMITTAL	07/26/2021
50% CD REVIEW	10/08/2021
100% CD DSA SUBMITTAL	10/22/2021
DSA SUBMITTAL	03/24/2022

Job Number	1904413
Date Published	03/24/2022
Checked By	LPA
Scale	As indicated

PLUMBING - POOL RESTROOM BUILDING DRAINAGE PLAN

P2.13

KEYNOTES

ITEM	DESCRIPTION
P-0001	REFER TO PLUMBING SITE PLAN SHEET P1.01 FOR CONTINUATION.
P-2101	COLD WATER UP TIGHT TO WALL TO 2'-0" ABOVE FINISHED GRADE WITH SHUT-OFF BALL VALVE ON RISE.
P-2102	COLD WATER UP TO ABOVE CEILING.
P-2105	COLD WATER DOWN IN WALL TO FULL-SIZE HEADER WITH SHUT-OFF BALL VALVE BEHIND ACCESS PANEL.
P-2106	COLD WATER DOWN IN WALL TO FIXTURE, ROUGH-IN AND CONNECT.
P-2110	COLD WATER DOWN TO ELECTRIC WATER HEATER, ROUGH-IN AND CONNECT. BRANCH 1-1/4"CW TO MIXING VALVE (MV-1) AND BRANCH 3/4"CW TO MOP SINK (MS-1).
P-2112	COLD WATER IN WALL, ROUGH-IN AND CONNECT TO FIXTURE.
P-2202	HOT WATER FROM EWH-1 UP, BRANCH 1-1/4"HW TO MIXING VALVE (MV-1) AND BRANCH 3/4"HW TO MOP SINK (MS-1).
P-2203	HOT WATER DOWN IN WALL TO FIXTURE, ROUGH-IN AND CONNECT.
P-2401	ROUGH-IN AND CONNECT 1-1/4"CW & 1-1/4"HW TO MIXING VALVE (MV-1). ROUTE 1-1/4" TEMPERED WATER ABOVE CEILING SPACE.
P-2402	TEMPERED WATER DOWN IN WALL, ROUTE UNDER POOL DECK TO POOL SHOWERS.
P-2404	TEMPERED WATER RETURN UP IN WALL TO ABOVE CEILING.
P-2405	TEMPERED WATER RETURN DOWN IN WALL TO CP-1.

LEGEND

- METAL STUD WALL CONSTRUCTION
- 1 HOUR RATED MASONRY WALL CONSTRUCTION
- 1 HOUR RATED MASONRY WALL CONSTRUCTION
- MASONRY WALL CONSTRUCTION

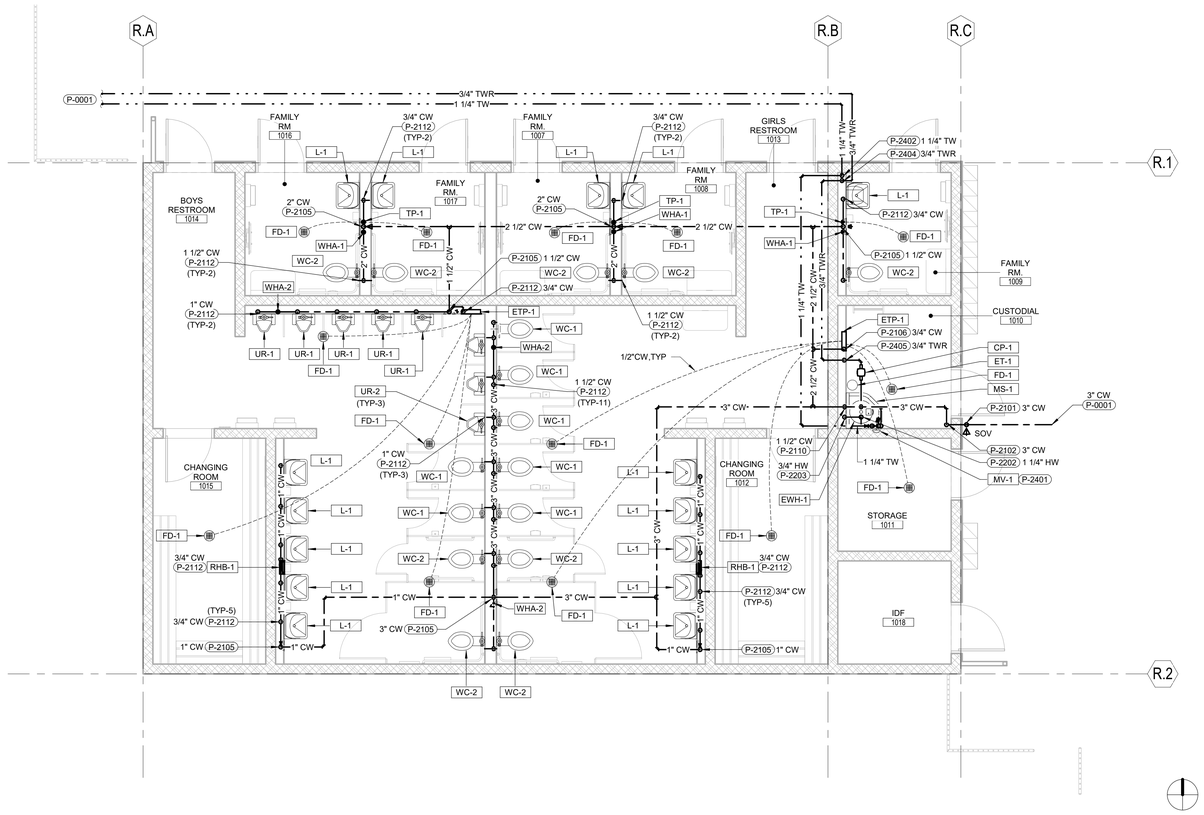

1 - BOYS & GIRLS RR WATER PLAN | 1/4" = 1'-0" | 05

IDENTIFICATION STAMP
DIV. OF THE STATE ARCHITECT
APP: 02-119490 INC:
REVIEWED FOR
SS ☑ FLS ☑ ACS ☑
DATE: 09/13/2022

LPA

ARCHITECTURE ENGINEERING INTERIORS
LANDSCAPE ARCHITECTURE PLANNING

916-287-2400 Office

916-287-2401 Fax

LPADesignStudios.com

431 I Street,
Suite 107
Sacramento, California 95814

REGISTERED PROFESSIONAL ENGINEER
CHRISTOPHER D. TANG
M32973
12/31/2022
MECHANICAL
STATE OF CALIFORNIA

This document and all other project documents, ideas, aesthetics and designs incorporated therein are instruments of service. All project documents are copyright protected, are the property of LPA, Inc. (LPA) and cannot be lawfully used in whole or in part for any project or purpose except as set forth in the contractual agreement between LPA and its Client. The unauthorized disclosure and/or use of the project documents (including the creation of derivative works), may give rise to liability for copyright infringement, unlawful disclosure, use or misappropriation of property rights held by LPA. The unauthorized use of the project documents will give rise to the recovery of monetary losses and damages including attorney fees and costs for which the unauthorized user will be held liable.
Project documents describe the design intent of the work and are not a representation of as-built or existing conditions. LPA is not responsible for any discrepancies between the project documents and the existing conditions.

© LPA, Inc.

PLAN NOTES

1. REFER TO STRUCTURAL DETAIL 01/S6.62 FOR PIPE PENETRATIONS AT MASONRY WALL.

KEY PLAN

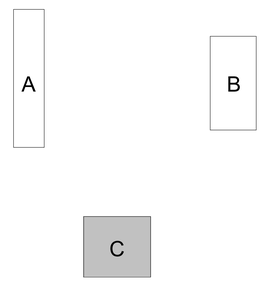

DAVIS SR HIGH SCHOOL
AQUATICS CENTER
315 W 14TH ST., DAVIS, CA 95616

Developed for
DAVIS JOINT UNIFIED SCHOOL DISTRICT

Revision	Date

Submittal	Date
50% DD REVIEW	06/15/2021
100% DD SUBMITTAL	07/26/2021
90% CD REVIEW	10/08/2021
100% CD DSA SUBMITTAL	10/22/2021
DSA SUBMITTAL	03/24/2022

Job Number	1904413
Date Published	03/24/2022
Checked By	LPA
Scale	As indicated

PLUMBING - POOL RESTROOM BUILDING WATER PLAN

P2.14

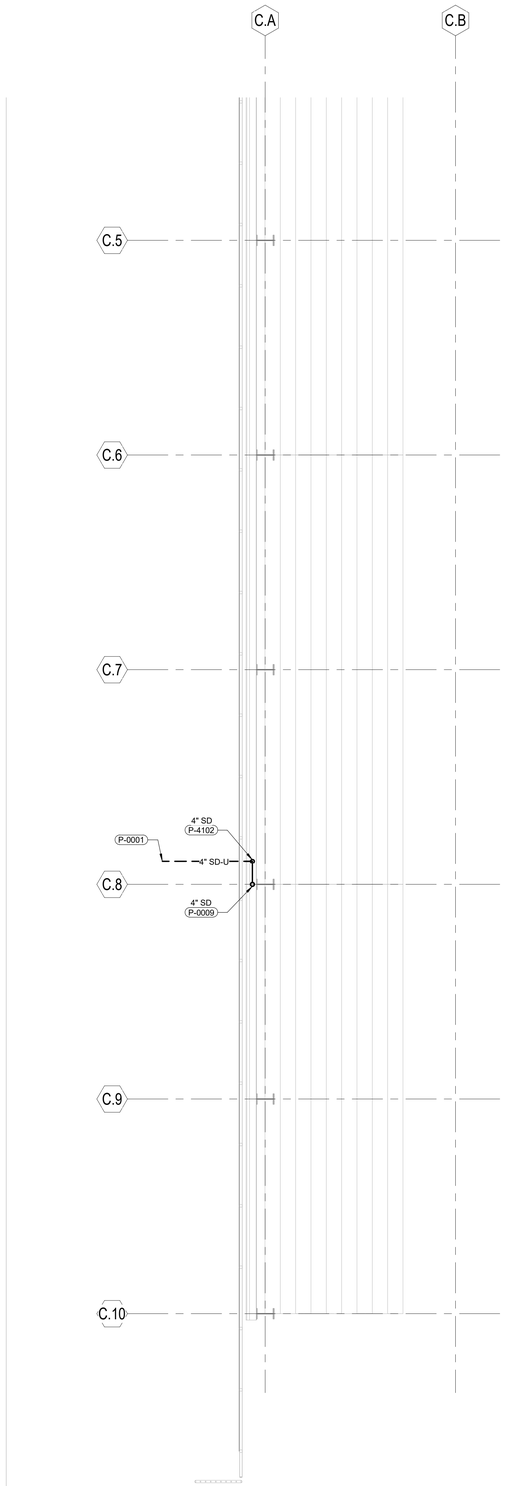

1 - PLUMBING - CANOPY - SOUTH | 1/4" = 1'-0" | 17

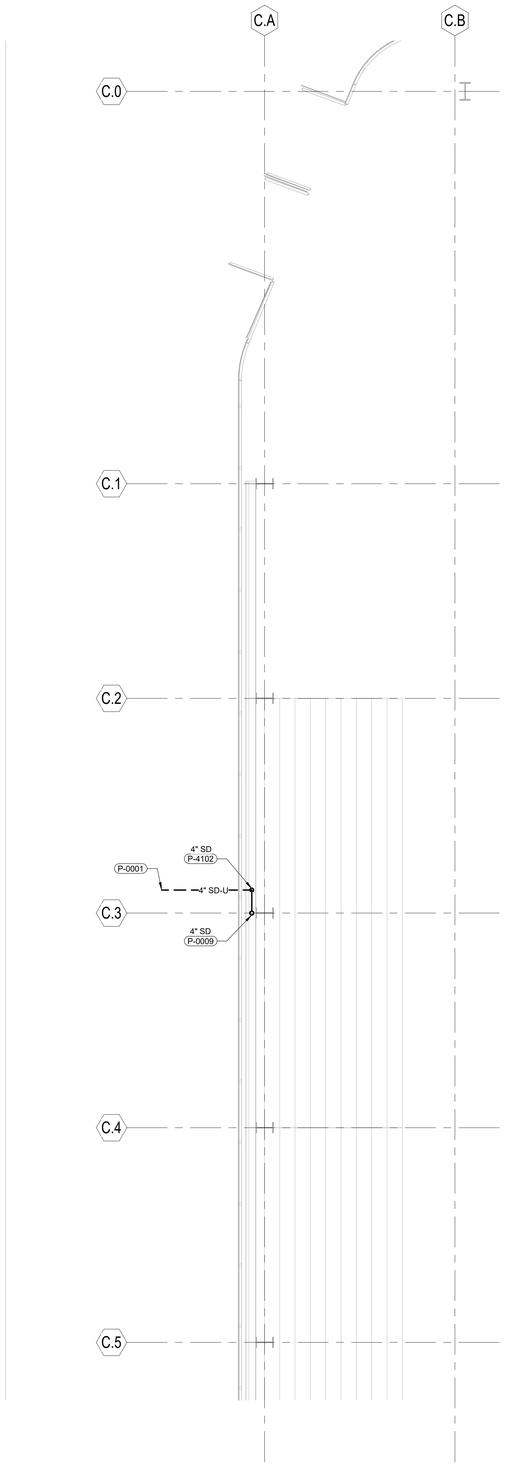

1 - PLUMBING - CANOPY - NORTH | 1/4" = 1'-0" | 05

KEYNOTES

ITEM	DESCRIPTION
P-0001	REFER TO PLUMBING SITE PLAN SHEET P1.01 FOR CONTINUATION.
P-0009	4" DOWNSPOUT DOWN TIGHT TO STEEL COLUMN, ROUTE OVER CONCRETE CURB. SEE ARCHITECTURAL DETAIL 05/A3.22 FOR MORE INFORMATION.
P-4102	STORM DRAIN DOWN TO BELOW FINISHED GRADE WITH CLEANOUT AT BASE.

IDENTIFICATION STAMP
DIV. OF THE STATE ARCHITECT
APP: 02-119490 INC:
REVIEWED FOR
SS ☑ FLS ☑ ACS ☑
DATE: 09/13/2022

LEGEND

- METAL STUD WALL CONSTRUCTION
- 1 HOUR RATED MASONRY WALL CONSTRUCTION
- 1 HOUR RATED MASONRY WALL CONSTRUCTION
- MASONRY WALL CONSTRUCTION

PLAN NOTES

1. REFER TO STRUCTURAL DETAIL 01/S6.62 FOR PIPE PENETRATIONS AT MASONRY WALL.

KEY PLAN

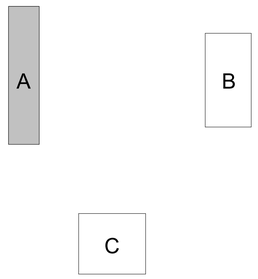

LPA
ARCHITECTURE ENGINEERING INTERIORS
LANDSCAPE ARCHITECTURE PLANNING

916-287-2400 Office
916-287-2401 Fax
LPADesignStudios.com
431 I Street,
Suite 107
Sacramento, California 95814

REGISTERED PROFESSIONAL ENGINEER
CHRISTOPHER D. TANG
M32973
12/31/2022
MECHANICAL
STATE OF CALIFORNIA

This document and all other project documents, ideas, aesthetics and designs incorporated therein are instruments of service. All project documents are copyright protected, are the property of LPA, Inc. (LPA) and cannot be lawfully used in whole or in part for any project or purpose except as set forth in the contractual agreement between LPA and its Client. The unauthorized disclosure and/or use of the project documents (including the creation of derivative works), may give rise to liability for copyright infringement, unlawful disclosure, use or misappropriation of property rights held by LPA. The unauthorized use of the project documents will give rise to the recovery of monetary losses and damages including attorney fees and costs for which the unauthorized user will be held liable.
Project documents describe the design intent of the work and are not a representation of as-built or existing conditions. LPA is not responsible for any discrepancies between the project documents and the existing conditions.

© LPA, Inc.

DAVIS SR HIGH SCHOOL
AQUATICS CENTER
315 W 14TH ST., DAVIS, CA 95616

Developed for
DAVIS JOINT UNIFIED SCHOOL DISTRICT

Revision	Date

Submittal	Date
50% DD REVIEW	06/15/2021
100% DD SUBMITTAL	07/26/2021
50% CD REVIEW	10/08/2021
100% CD DSA SUBMITTAL	10/22/2021
DSA SUBMITTAL	09/24/2022

Job Number	1904413
Date Published	03/24/2022
Checked By	LPA
Scale	As indicated

PLUMBING - CANOPY FLOOR PLAN

P2.15

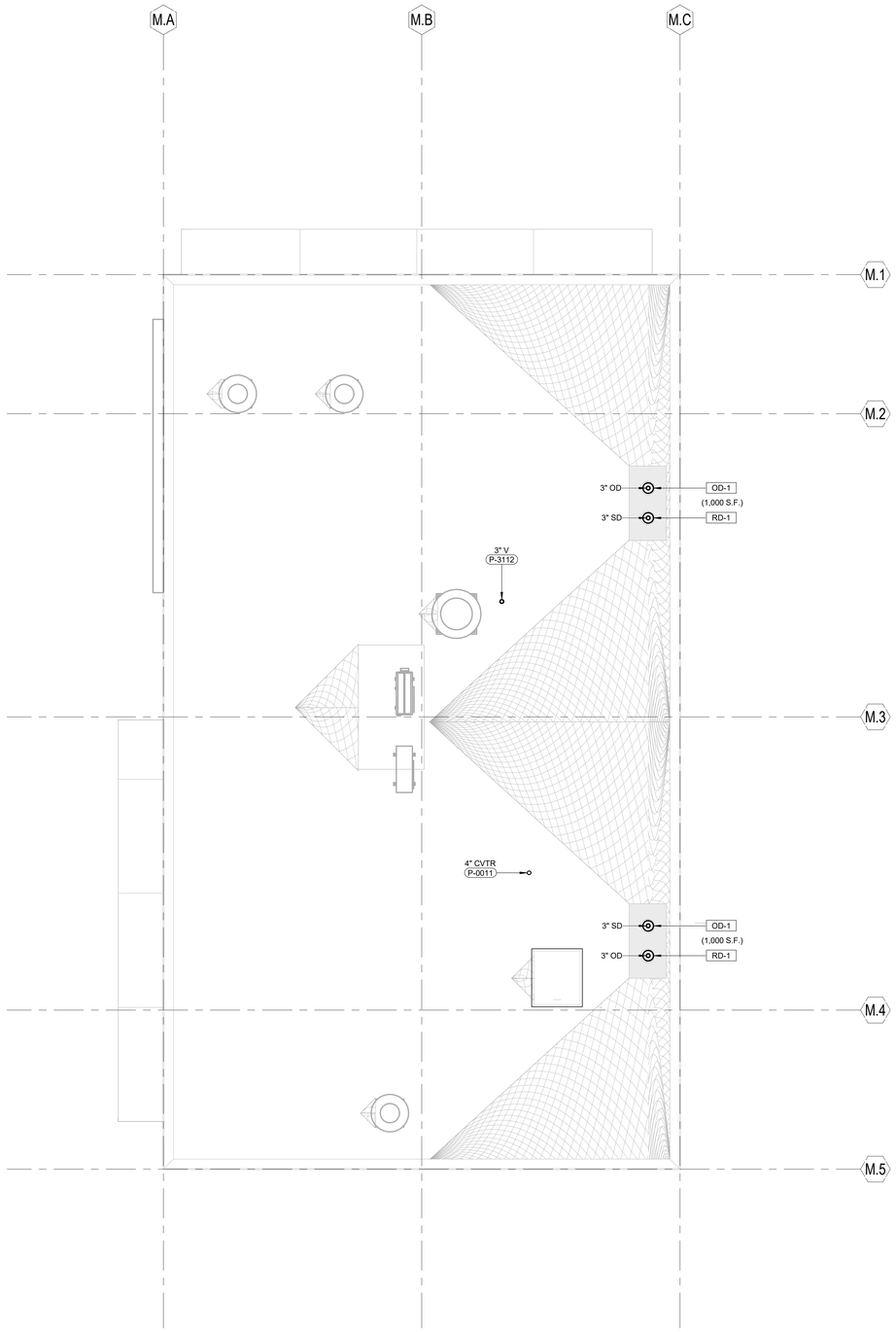

R - PLUMBING - POOL MECHANICAL BUILDING ROOF PLAN | 1/4" = 1'-0" | 05

KEYNOTES

ITEM	DESCRIPTION
P-0011	SEE DETAIL 11/P6.10 FOR MORE INFORMATION.
P-3112	VENT THROUGH ROOF WITH VANDAL PROOF VENT CAP, SEE DETAIL #15/P6.10.

PLAN NOTES

1. STORM DRAIN AND OVERFLOW DRAIN SYSTEMS ARE SIZED IN ACCORDANCE WITH THE 2019 CALIFORNIA PLUMBING CODE, TABLE 1103.2, AND IS BASED ON A RAINFALL RATE OF 3" (in) PER HOUR.

KEY PLAN

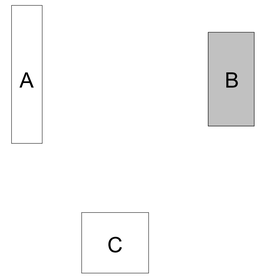

IDENTIFICATION STAMP
DIV. OF THE STATE ARCHITECT
APP: 02-119490 INC:
REVIEWED FOR
SS ☑ FLS ☑ ACS ☑
DATE: 09/13/2022

LPA
ARCHITECTURE ENGINEERING INTERIORS
LANDSCAPE ARCHITECTURE PLANNING

916-287-2400 Office

916-287-2401 Fax

LPADesignStudios.com

431 I Street,
Suite 107
Sacramento, California 95814

REGISTERED PROFESSIONAL ENGINEER
CHRISTOPHER D. TAYLOR
M32973
12/31/2022
MECHANICAL
STATE OF CALIFORNIA

This document and all other project documents, ideas, aesthetics and designs incorporated therein are instruments of service. All project documents are copyright protected, are the property of LPA, Inc. (LPA) and cannot be lawfully used in whole or in part for any project or purpose except as set forth in the contractual agreement between LPA and its Client. The unauthorized disclosure and/or use of the project documents (including the creation of derivative works), may give rise to liability for copyright infringement, unlawful disclosure, use or misappropriation of property rights held by LPA. The unauthorized use of the project documents will give rise to the recovery of monetary losses and damages including attorney fees and costs for which the unauthorized user will be held liable.
Project documents describe the design intent of the work and are not a representation of as-built or existing conditions. LPA is not responsible for any discrepancies between the project documents and the existing conditions.

© LPA, Inc.

DAVIS SR HIGH SCHOOL
AQUATICS CENTER
315 W 14TH ST., DAVIS, CA 95616

Developed for
DAVIS JOINT UNIFIED SCHOOL DISTRICT

Revision	Date

Submittal	Date
50% DD REVIEW	06/15/2021
100% DD SUBMITTAL	07/26/2021
50% CD REVIEW	10/08/2021
100% CD DSA SUBMITTAL	10/22/2021
DSA SUBMITTAL	03/24/2022

Job Number	1904413
Date Published	03/24/2022
Checked By	LPA
Scale	As indicated

PLUMBING - POOL MECHANICAL BUILDING ROOF PLAN

P2.31

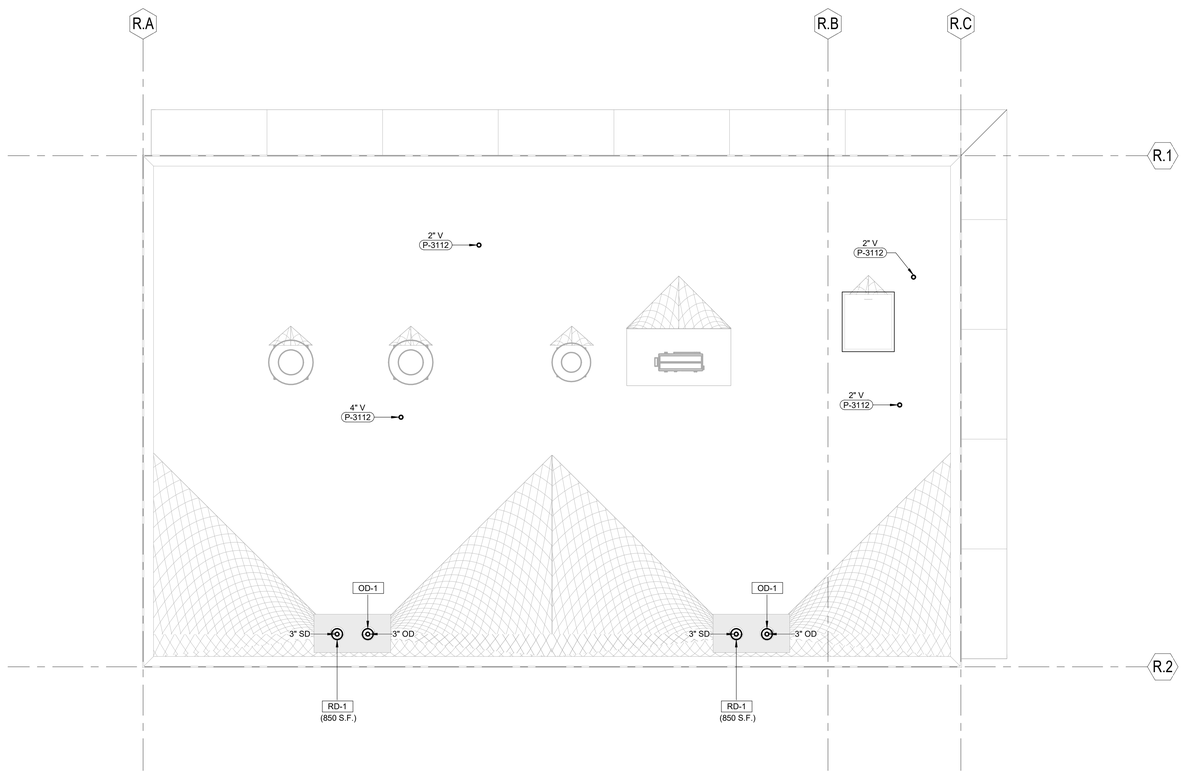

R - PLUMBING - POOL RESTROOM BUILDING ROOF PLAN | 1/4" = 1'-0" | 05

KEYNOTES

ITEM	DESCRIPTION
P-3112	VENT THROUGH ROOF WITH VANDAL PROOF VENT CAP, SEE DETAIL #15/P5.10.

PLAN NOTES

1. STORM DRAIN AND OVERFLOW DRAIN SYSTEMS ARE SIZED IN ACCORDANCE WITH THE 2019 CALIFORNIA PLUMBING CODE, TABLE 1103.2, AND IS BASED ON A RAINFALL RATE OF 3" (in) PER HOUR.

IDENTIFICATION STAMP
DIV. OF THE STATE ARCHITECT
APP: 02-119490 INC:
REVIEWED FOR
SS ☑ FLS ☑ ACS ☑
DATE: 09/13/2022

LPA

ARCHITECTURE ENGINEERING INTERIORS
LANDSCAPE ARCHITECTURE PLANNING

916-287-2400 Office

916-287-2401 Fax

LPADesignStudios.com

431 I Street,
Suite 107
Sacramento, California 95814

REGISTERED PROFESSIONAL ENGINEER
CHRISTOPHER D. TAKE
M32973
12/31/2022
MECHANICAL
STATE OF CALIFORNIA

This document and all other project documents, ideas, aesthetics and designs incorporated therein are instruments of service. All project documents are copyright protected, are the property of LPA, Inc. (LPA) and cannot be lawfully used in whole or in part for any project or purpose except as set forth in the contractual agreement between LPA and its Client. The unauthorized disclosure and/or use of the project documents (including the creation of derivative works), may give rise to liability for copyright infringement, unlawful disclosure, use or misappropriation of property rights held by LPA. The unauthorized use of the project documents will give rise to the recovery of monetary losses and damages including attorney fees and costs for which the unauthorized user will be held liable.
Project documents describe the design intent of the work and are not a representation of as-built or existing conditions. LPA is not responsible for any discrepancies between the project documents and the existing conditions.

© LPA, Inc.

KEY PLAN

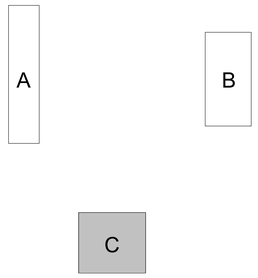

DAVIS SR HIGH SCHOOL
AQUATICS CENTER
315 W 14TH ST., DAVIS, CA 95616

Developed for
DAVIS JOINT UNIFIED SCHOOL DISTRICT

Revision	Date

Submittal	Date
50% DD REVIEW	06/15/2021
100% DD SUBMITTAL	07/26/2021
90% CD REVIEW	10/08/2021
100% CD DSA SUBMITTAL	10/22/2021
DSA SUBMITTAL	03/24/2022

Job Number	1904413
Date Published	03/24/2022
Checked By	LPA
Scale	As indicated

PLUMBING - POOL RESTROOM BUILDING ROOF PLAN

P2.32

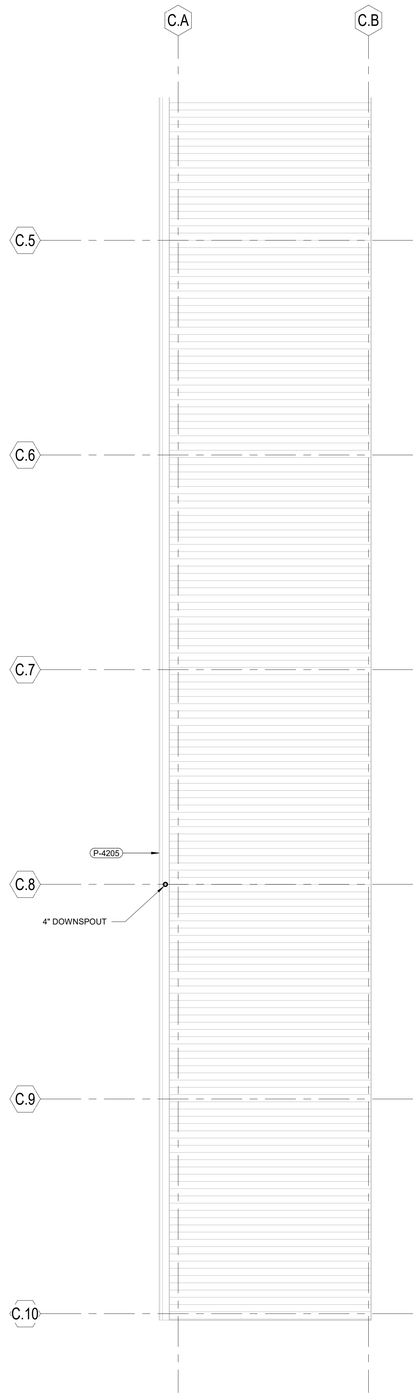

R - PLUMBING - CANOPY - SOUTH | 1/4" = 1'-0" | 17

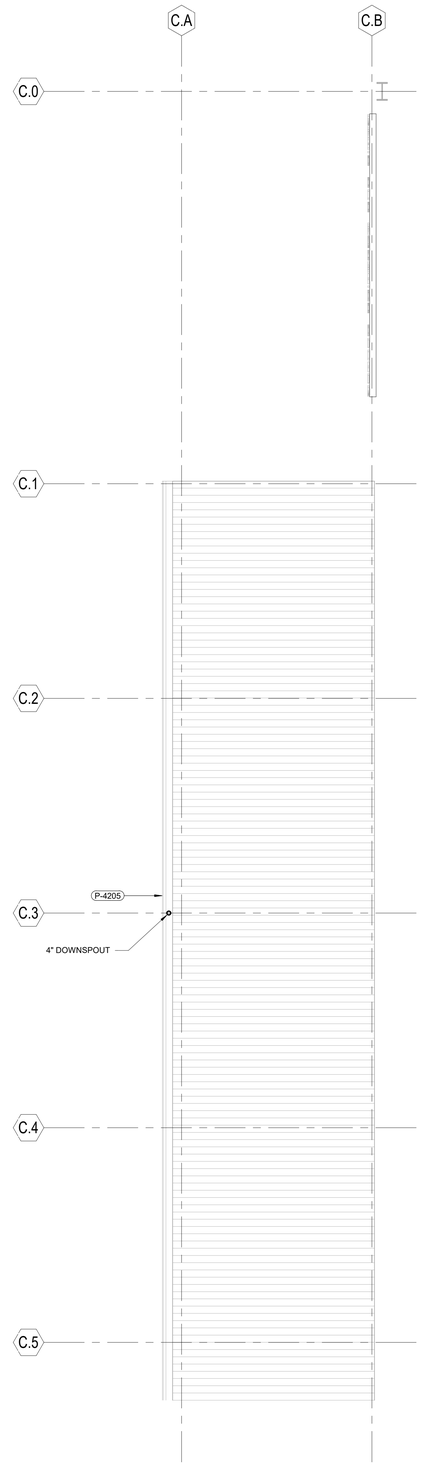

R - PLUMBING - CANOPY - NORTH | 1/4" = 1'-0" | 05

KEYNOTES

ITEM	DESCRIPTION
P-4205	REFER TO ARCHITECTURAL DETAIL 11/A3.22 FOR CANOPY GUTTER.

PLAN NOTES

1. STORM DRAIN AND OVERFLOW DRAIN SYSTEMS ARE SIZED IN ACCORDANCE WITH THE 2019 CALIFORNIA PLUMBING CODE, TABLE 1103.2, AND IS BASED ON A RAINFALL RATE OF 3" (in) PER HOUR.

KEY PLAN

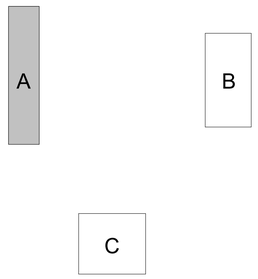

IDENTIFICATION STAMP
DIV. OF THE STATE ARCHITECT
APP: 02-119490 INC:
REVIEWED FOR
SS ☑ FLS ☑ ACS ☑
DATE: 09/13/2022

LPA
ARCHITECTURE ENGINEERING INTERIORS
LANDSCAPE ARCHITECTURE PLANNING

916-287-2400 Office

916-287-2401 Fax

LPADesignStudios.com

431 I Street,
Suite 107
Sacramento, California 95814

REGISTERED PROFESSIONAL ENGINEER
CHRISTOPHER D. TANG
M32973
12/31/2022
MECHANICAL
STATE OF CALIFORNIA

This document and all other project documents, ideas, aesthetics and designs incorporated therein are instruments of service. All project documents are copyright protected, are the property of LPA, Inc. (LPA) and cannot be lawfully used in whole or in part for any project or purpose except as set forth in the contractual agreement between LPA and its Client. The unauthorized disclosure and/or use of the project documents (including the creation of derivative works), may give rise to liability for copyright infringement, unlawful disclosure, use or misappropriation of property rights held by LPA. The unauthorized use of the project documents will give rise to the recovery of monetary losses and damages including attorney fees and costs for which the unauthorized user will be held liable.
Project documents describe the design intent of the work and are not a representation of as-built or existing conditions. LPA is not responsible for any discrepancies between the project documents and the existing conditions.

© LPA, Inc.

DAVIS SR HIGH SCHOOL
AQUATICS CENTER
315 W 14TH ST., DAVIS, CA 95616

Developed for
DAVIS JOINT UNIFIED SCHOOL DISTRICT

Revision	Date

Submittal	Date
50% DD REVIEW	06/15/2021
100% DD SUBMITTAL	07/26/2021
50% CD REVIEW	10/08/2021
100% CD DSA SUBMITTAL	10/22/2021
DSA SUBMITTAL	09/24/2022

Job Number	1904413
Date Published	03/24/2022
Checked By	LPA
Scale	As indicated

PLUMBING - CANOPY ROOF PLAN

P2.33

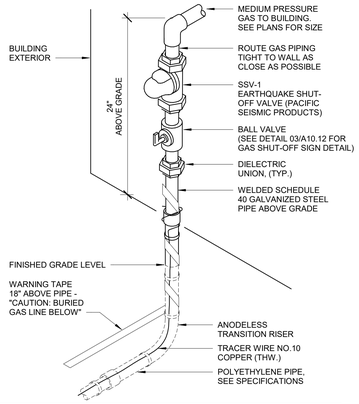

BUILDING GAS SERVICE DETAIL | NTS | 20

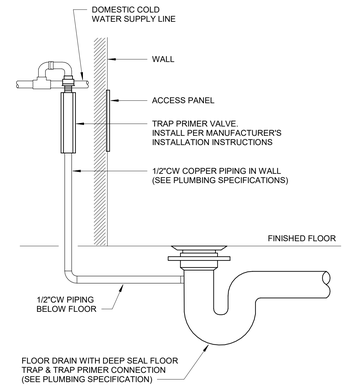

TRAP PRIMER CONNECTION DETAIL | NTS | 16

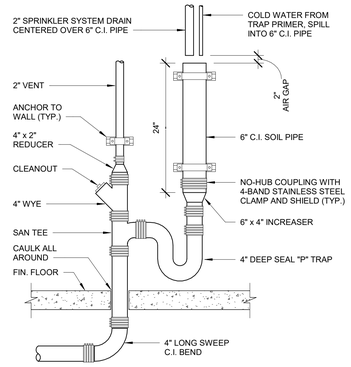

FIRE SPRINKLER STANDPIPE DRAIN | NTS | 12

NOTES:
1. ALL CONDENSATE DRAIN LINES WITHIN BUILDING SHALL BE INSULATED.
2. SEE PLUMBING PLANS FOR PIPE SIZES.
3. TRAP DEPTH SHALL BE EQUAL TO THE FAN COIL UNIT TOTAL STATIC PRESSURE PLUS 1-INCH BUT NOT LESS THAN 2-INCHES.

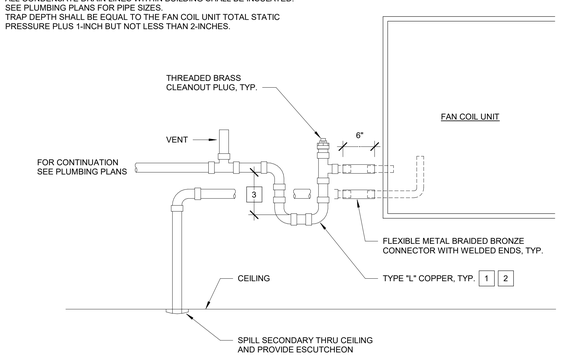

FAN COIL CONDENSATE DRAIN DETAIL | NTS | 04

NOTE:
A MIN. HEIGHT = 0'-6"
MAX. HEIGHT = 1'-6"

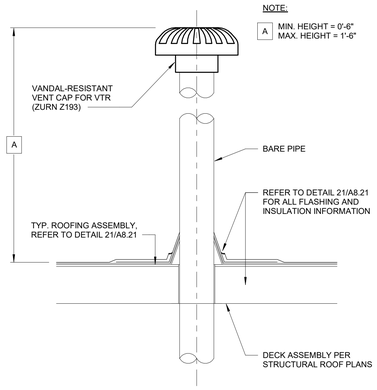

VENT THRU ROOF DETAIL | NTS | 15

NOTE:
TERMINATIONS 10'-0" OR LESS FROM A WALL OR PARAPET REQUIRE A CHIMNEY TO EXTEND 2'-0" MIN. ABOVE A WALL OR PARAPET. NO HEIGHT ABOVE PARAPET REQUIRED WHEN DISTANCE FROM WALLS OR PARAPET IS MORE THAN 10'-0".

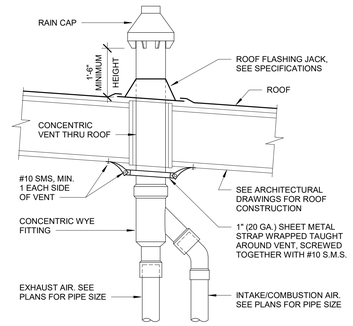

CONCENTRIC VENT THRU ROOF DETAIL | NTS | 11

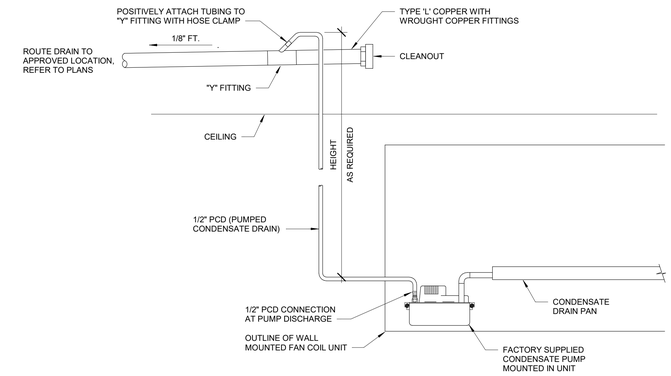

FAN COIL CONDENSATE PUMP PIPING DETAIL | NTS | 03

INSTALLATION NOTES:
1. MOUNT CHANNELS ON BLOCKING AS SHOWN BELOW.
2. INSTALL STRAPPING WITHIN UPPER ONE-THIRD AND LOWER ONE-THIRD OF VERTICAL WATER HEATER DIMENSION.

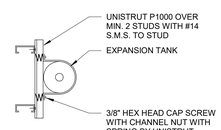

EXPANSION TANK ANCHORAGE DETAIL

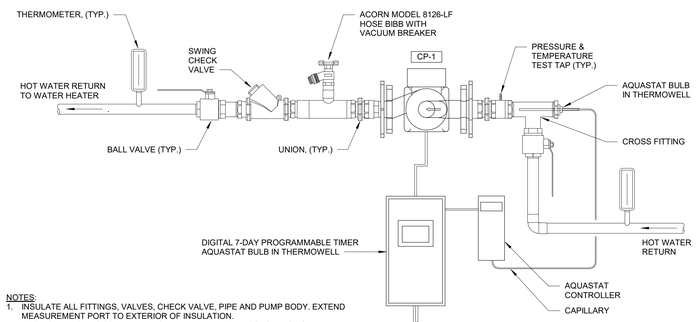

NOTES:
1. INSULATE ALL FITTINGS, VALVES, CHECK VALVE, PIPE AND PUMP BODY. EXTEND MEASUREMENT PORT TO EXTERIOR OF INSULATION.
2. RECIRCULATION BOOSTER PUMP SHALL BE LEAD-FREE CONSTRUCTION.
3. 7-DAY PROGRAMMABLE TIMER SHALL BE SET TO ALLOW PUMP OPERATION ONLY DURING OCCUPIED HOURS.
4. AQUASTAT CONTROLLER SHALL BE SET TO DISENGAGE THE PUMP WHEN THE RETURN WATER TEMPERATURE IS ABOVE 105 F OR AS ALLOWED BY LOCAL ENERGY CODE.
5. PROVIDE AUTOMATIC AIR VENT AS REQUIRED BY LOCAL ENERGY CODE TO REDUCE CAVITATION. ROUTE DRAIN LINE TO APPROVED DRAINAGE RECEPTOR. INSTALL AIR VENT WITHIN 48" OF PUMP INLET AS REQUIRED TO REDUCE.

CIRCULATION PUMP INSTALLATION SCHEMATIC | NTS | 02

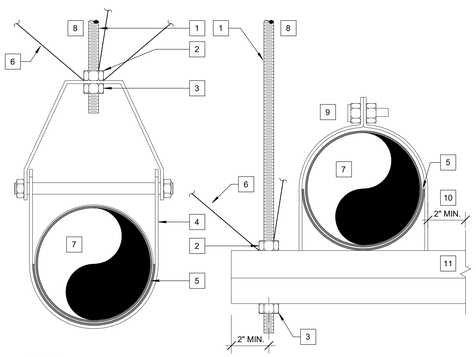

1	THREADED ROD HANGER (SEE NOTE #2)
2	LOCKING NUT
3	SUPPORT NUT
4	B-LINE B3100F CLEVIS HANGER
5	14 GAGE ZINC COATED SADDLE.
6	SEISMIC AIRCRAFT CABLE BOTH SIDE OF UNISTRUT (SEE NOTE #3). 4 DIRECTION SPLAYED AT 45 DEGREES AT SINGLE PIPE
7	PIPE. MAX DIAMETER OF PIPE TO BE 6" (SEE PLANS FOR SIZES)
8	UPPER ATTACHMENT (SEE NOTE #2)
9	STRUCT CLAMP OR U-BOLT
10	MINIMUM DISTANCE TO NEXT PIPE. MAX DIAMETER OF PIPE TO BE 6" (3 PIPES MAX)
11	P1001 UNISTRUT. MAX SPAN 4'-0". MAX. WEIGHT 1,000 LBS

NOTES:
1. MAXIMUM HORIZONTAL HANGER SPACING FOR 1-1/4" PIPING AND SMALLER TO BE 5'-0" AND 1-1/2" PIPING AND LARGER TO BE 8'-0".
2. SEE STRUCTURAL HANGER DETAILS 01 & 03/S6.91 FOR METAL CHANNEL STRUT FRAMING & 19/S6.91 FOR ROD HANGER DETAILS.
3. 1/4" DIA AIRCRAFT CABLE PER DETAIL 19/S6.91. PROVIDE CABLE BRACING ON EACH SIDE OF UNISTRUT/HANGER.
   - PROVIDE TRANSVERSE BRACING AT 16'-0" MAX. O.C. EACH DIRECTION. MINIMUM (2) ON EACH STRAIGHT RUN.
   - PROVIDE LONGITUDINAL BRACING AT 24'-0" MAX. O.C. EACH SIDE OF UNISTRUT/HANGER, EACH DIRECTION. MINIMUM (1) ON EACH STRAIGHT RUN.

SINGLE PIPE AND TRAPEZE HANGER DETAIL | NTS | 17

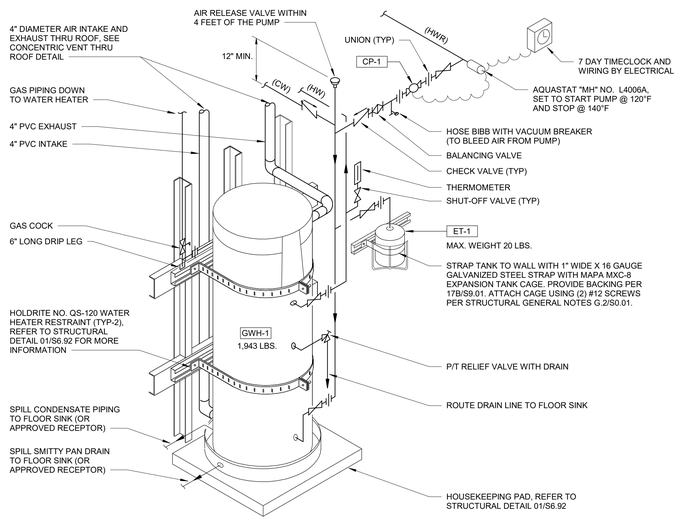

GAS WATER HEATER DETAIL | NTS | 09

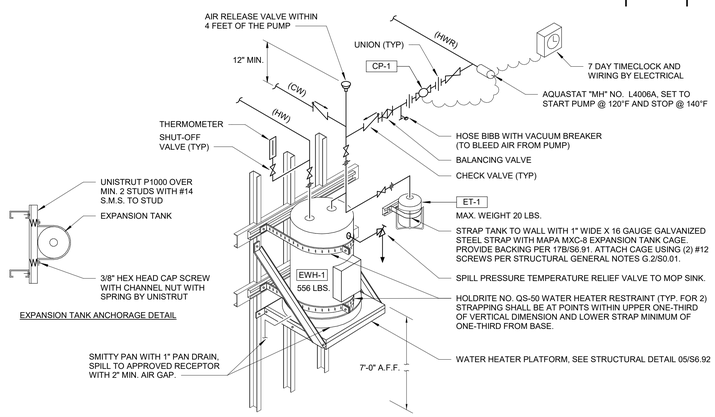

EXPANSION TANK ANCHORAGE DETAIL

ELECTRIC WATER HEATER WITH C.P. DETAIL | NTS | 01

IDENTIFICATION STAMP
DIV. OF THE STATE ARCHITECT
APP: 02-119490 INC:
REVIEWED FOR
SS ☑ FLS ☑ ACS ☑
DATE: 09/13/2022

LPA

ARCHITECTURE ENGINEERING INTERIORS
LANDSCAPE ARCHITECTURE PLANNING

916-287-2400 Office
916-287-2401 Fax
LPADesignStudios.com
431 I Street,
Suite 107
Sacramento, California 95814

REGISTERED PROFESSIONAL ENGINEER CHRISTOPHER D. TAYLOR M32973 12/31/2022 MECHANICAL STATE OF CALIFORNIA

This document and all other project documents, ideas, aesthetics and designs incorporated therein are instruments of service. All project documents are copyright protected, are the property of LPA, Inc. (LPA) and cannot be lawfully used in whole or in part for any project or purpose except as set forth in the contractual agreement between LPA and its Client. The unauthorized disclosure and/or use of the project documents (including the creation of derivative works), may give rise to liability for copyright infringement, unlawful disclosure, use or misappropriation of property rights held by LPA. The unauthorized use of the project documents will give rise to the recovery of monetary losses and damages including attorney fees and costs for which the unauthorized user will be held liable.
Project documents describe the design intent of the work and are not a representation of as-built or existing conditions. LPA is not responsible for any discrepancies between the project documents and the existing conditions.

© LPA, Inc.

DAVIS SR HIGH SCHOOL
AQUATICS CENTER
315 W 14TH ST., DAVIS, CA 95616

Developed for
DAVIS JOINT UNIFIED SCHOOL DISTRICT

Revision	Date

Submittal	Date
50% DD REVIEW	06/15/2021
100% DD SUBMITTAL	07/26/2021
50% CD REVIEW	10/08/2021
100% CD DSA SUBMITTAL	10/22/2021
DSA SUBMITTAL	03/24/2022

Job Number	1904413
Date Published	03/24/2022
Checked By	LPA
Scale	

PLUMBING DETAILS

P6.10

FIRE SPRINKLER MATERIAL SCHEDULE

SPEC SECTION	DESCRIPTION	MODEL NO.	CSFM LISTING	MFR.
210500				
2.2	BURIED PIPE			
	IN-BUILDING RISER	SERIES IBR	N/A	AMES
2.3	ABOVE GROUND PIPING			
	PIPE			
	2-1/2"-6" SCHED. 10	N/A	N/A	WHEATLAND
	1" - 2" SCHED. 40	N/A	N/A	WHEATLAND
	FITTINGS			
	DUCTILE IRON THREADED	N/A	N/A	ANVIL
	GROOVED	DN	N/A	VICTAULIC
2.5	PIPE HANGERS AND SUPPORTS			
	----	----	----	TOLCO
210523				
2.3	BUTTERFLY VALVE			
	GROOVED BUTTERFLY VALVES WITH SUPERVISORY TAMPER SWITCH	SERIES 705	7770-0531:0113	VICTAULIC
2.4	CHECK VALVES			
	4" GROOVED CHECK VALVE	M-2	N/A	VIKING
2.6	GLOBE OR ANGLE VALVES			
	GLOBE VALVE	125SUL	N/A	UNITED BRASS
	ANGLE VALVE	126SUL	N/A	UNITED BRASS
211300				
1.6	STRUCTURAL DESIGN AND SEISMIC REQUIREMENTS			
	IN-LINE SWAY BRACE ATTACHMENT	FIG. 4L	N/A	TOLCO
	UNIVERSAL SWIVEL SWAY BRACE	FIG. 980	N/A	TOLCO
	SWAY BRACE ATTACHMENT	FIG. 1001	N/A	TOLCO
	SURGE RESTRAINER	FIG. 25	N/A	TOLCO
2.2	SPRINKLERS			
	MICROFAST QR SSU	VK338	N/A	VIKING
2.3	PIPING SPECIALTIES			
	ELECTRIC BELL	PBA-AC	7135-0328:0119	POTTER
	SWITCH	VSR	7770-0328:0001	POTTER
	CONTROL VALVE SUPERVISORY SWITCH	PCVS-1	7770-0328:0010	POTTER
	SPECIALTY VALVES			

8/20/2021 Hydrant Flow Test Calculator | Hose Monster

PRICING UPDATE

Select Language

RECEIVED
AUG 1 9 2021
DAVIS FIRE DEPT

City of Davis Fire Department
23 Russell Blvd.
Davis, CA 95616
530-757-5684

SANDHOOT / MICHIGAN / EASTABAY
HYDRANT FLOW TEST CALCULATOR
FLOW HYDRANT - 1509 OAK
STATIC / RESIDUAL HYDRANT - SCRIPPS X OAK
FLOW @ 20 PSI - 4684 GPM

All Resources

The Hydrant Flow Test Calculator measures the rated capacity at 20 psi of a fire hydrant. The rated capacity calculation is useful in determining the total water supply at a given point in the hydrant or water main. The calculation offers more useful information than the test flow by itself and is used by insurance underwriters. For more information see NFPA 291, AWWA M-17, or our web page on Hydrant Flow Testing.

Static Pressure (PSI):
51

Residual Pressure (PSI):
47

Total Test Flow Rate (GPM):
1550

https://hosemonster.com/resources/hydrant-flow-test-calculator/ 1/4

FIRE SPRINKLER SHEET INDEX

SHEET NUMBER	SHEET NAME
FP4.11	FIRE SPRINKLER SEISMIC CALCULATIONS
FP1.00	FIRE SPRINKLER SITE PLAN
FP0.00	FIRE SPRINKLER LEGEND, NOTES, AND SCHEDULES
FP9.00	FIRE SPRINKLER DETAILS
FP2.10	FIRE SPRINKLER PIPING PLAN AND SECTIONS

FIRE PROTECTION NOTES

1. ALL WORKS AND MATERIALS SHALL BE PERFORMED AND INSTALLED IN COMPLIANCE WITH THE FOLLOWING CODES AS AMENDED AND ADOPTED BY THE INSPECTION AUTHORITY. NOTHING IN THESE PLANS IS TO BE CONSTRUED TO PERMIT WORK NOT CONFORMING TO THESE CODES OR OTHERS APPLICABLE TO THIS PROJECT.
   A. CALIFORNIA FIRE CODE, 2019
   B. NFPA-13, 2016
   C. NFPA-24, 2016
   D. DIVISION OF THE STATE ARCHITECT
   E. CALIFORNIA BUILDING CODE - 2019
   F. CALIFORNIA MECHANICAL CODE- 2019
   G. CALIFORNIA PLUMBING CODE - 2019
   H. CALIFORNIA ELECTRICAL CODE - 2019
   I. STATE OF CALIFORNIA ENERGY CONSERVATION REGULATIONS, TITLE 24 - 2019
   J. NATIONAL FIRE PROTECTION ASSOCIATION
   K. OCCUPATIONAL SAFETY AND HEALTH ACT (OSHA)
2. THE CONTRACTOR SHALL SURVEY EXISTING FIELD CONDITIONS PRIOR TO BIDDING.
3. ANY DAMAGE TO NEW BUILDING ARCHITECTURAL, STRUCTURAL, MECHANICAL, PLUMBING, AND ELECTRICAL SYSTEMS THAT OCCURS DURING INSTALLATION SHALL BE RESTORED TO THE ORIGINAL CONDITION AT THE CONTRACTOR'S EXPENSE. IF LANDSCAPED AREAS INCLUDING NATURAL SPACES, MUST BE USED FOR BUILDING ACCESS THE LANDSCAPING SHALL BE RETURNED TO IT'S ORIGINAL CONDITION. THE CONTRACTOR MAY INCLUDE COSTS IN THE BID FOR THIS WORK IF THIS APPROACH IS USED. THE OWNER WILL NOT PAY ANY ADDITIONAL COSTS TO COVER DAMAGE TO THE BUILDING SYSTEMS, LANDSCAPING, OR DRIVE AREAS.
4. COORDINATE THE FOLLOWING WITH ARCHITECTURAL, STRUCTURAL, MECHANICAL, PLUMBING AND ELECTRICAL DRAWING ELEMENTS INSTALLED INCLUDING EXISTING BUILDING SYSTEMS:
   A. EXACT LOCATION OF ALL EQUIPMENT.
   B. ALL PENETRATIONS THRU ROOF, WALLS AND FLOORS.
   C. EXACT SIZE AND ROUTING OF PIPING.
5. DRAWINGS ARE DIAGRAMMATIC ONLY. PIPE, VALVES, AND EQUIPMENT SHALL FOLLOW THE ARRANGEMENT SHOWN WHILE STILL COORDINATING ROUTING AROUND OBSTRUCTIONS TO THE SPRINKLER LAYOUT.
6. INSTALLATION OF THE SPRINKLER SYSTEM SHALL NOT BE STARTED UNTIL COMPLETE PLANS AND SPECIFICATION, INCLUDING WATER SUPPLY INFORMATION, HAVE BEEN APPROVED BY LP CONSULTING ENGINEERS. AT VARIOUS STAGES AND UPON COMPLETION THE SYSTEM MUST BE TESTED IN THE PRESENCE OF THE AUTHORITY HAVING JURISDICTION (AHJ).
7. THE LOCATION OF THE FIRE SPRINKLER HEADS SHALL BE COORDINATED WITH THE NEW CEILING LAYOUTS AND ALL OTHER TRADES FOR COMPLETE FIRE PROTECTION COVERAGE OF ALL AREAS. PROVIDE DETAILED PLANS FOR APPROVAL PRIOR TO INSTALLATION.
8. HEADS SHALL BE SYMMETRICALLY LOCATED IN CENTER OF CEILING PANELS. COORDINATE LAYOUT WITH CEILING OR SOFFIT LIGHT FIXTURES, HVAC DIFFUSERS AND RETURN GRILLS, SPEAKERS, FIRE ALARM DEVICES, ETC. PROVIDE PENDENT AND/OR CONCEALED TYPE SPRINKLER HEADS WHERE REQUIRED.
9. WORKMANSHIP:
   ALL WORK SHALL BE DONE IN A NEAT AND WORKMANLIKE MANNER ACCORDING TO THE BEST TRADE PRACTICE BY THOSE SKILLED IN THEIR PARTICULAR TRADE. PIPES, HANGERS, AND DEVICES,TO BE INSTALLED LEVEL, SQUARE OR CENTERED TO GIVE A NEAT AND PLEASING APPEARANCE. ALL EQUIPMENT IS TO BE INSTALLED STRICTLY PER MANUFACTURER'S RECOMMENDATIONS. COORDINATE ALL WORK WITH OTHER TRADES AND ARCHITECT.
10. THE ANNULAR SPACE BETWEEN PIPE SLEEVES AND THE PIPE THROUGH ALL RATED WALLS AND FLOORS SHALL BE FIRESTOPPED. FIRESTOPPING ALL PIPE PENETRATIONS SHALL COMPLY WITH U.L REQUIREMENTS. MANUFACTURER PREAPPROVED UL PENETRATION FOR PROSET, OR APPROVED EQUAL. SUBMIT SHOP DRAWINGS.
11. BY OTHERS:
   A. ELECTRICAL CONTRACTOR: ALL POWER AND ALARM WIRING, CONDUITS, DISCONNECTS, AND FINAL CONNECTIONS. NO FIELD SUPPLIED ELECTRICAL DEVICE SHALL BE MOUNTED ON PIPING AND NO RIGID ELECTRICAL CONNECTIONS SHALL BE MADE
   B. GENERAL CONTRACTOR: CUTTING, FRAMING, PATCHING, FURRING, AND PAINTING.
12. WARRANTY:
   ALL MATERIALS AND EQUIPMENT INSTALLED UNDER THIS CONTRACT SHALL BE GUARANTEED FREE FROM ALL FIRE PROTECTION, ELECTRICAL, AND WORKMANSHIP DEFECTS FOR A PERIOD OF ONE YEAR FROM DATE OF FINAL ACCEPTANCE. THE CONTRACTOR SHALL BE RESPONSIBLE FOR ALL DAMAGES TO THE PREMISES CAUSED BY LEAKS AND/OR BREAKS IN PIPES AND FIXTURES INSTALLED UNDER THIS CONTRACT.
13. IT IS THE INTENTION OF THE PLANS AND SPECIFICATIONS TO COVER ALL THINGS REQUIRED TO PROVIDE COMPLETE AND FUNCTIONING SYSTEMS. THE CONTRACTOR IS TO FURNISH ALL LABOR, MATERIALS, TRANSPORTATION, EQUIPMENT, MISCELLANEOUS DEVICES, ETC., REQUIRED TO ACCOMPLISH THIS RESULT. ANYTHING WHICH MAY BE REASONABLY CONSTRUED AS A NECESSARY PART OF THE INSTALLATION WHETHER SPECIFICALLY SHOWN OR MENTIONED, SHALL BE INCLUDED. THE ENGINEER WILL GIVE ANY INTERPRETATIONS NECESSARY FOR THE CONTRACTOR TO PROPERLY ESTIMATE AND INSTALL THE WORK.
14. C-16 CONTRACTOR SHALL GENERATE SHOP DRAWINGS AS A REFLECTION OF WHAT THE ENGINEER OF RECORD HAS DESIGNED ON APPROVED DOCUMENTS. CONTRACTOR IS EXPECTED TO CAPTURE ANY NECESSARY MODIFICATIONS TO THE LAYOUT PRIOR TO SUBMITTAL REVIEW AND INSTALLATION, TO VERIFY THE SYSTEM IS CODE COMPLAINT. CHANGES THAT DO NOT AFFECT THE SPRINKLER DESIGN INTENT OR HYDRAULIC CALCULATIONS ARE NOT INTENDED TO PREVENT THE CONTRACTOR FROM MAKING ANY NECESSARY MODIFICATIONS DURING COORDINATION INCLUDING BUT NOT LIMITED TO CHANGING OR ADDING PROTECTION BECAUSE OF OBSTRUCTIONS TO SPRINKLER DISCHARGE, CENTERING OF SPRINKLER HEADS, RELOCATING DUE TO CONTRACTIBILITY AND COORDINATION, OR ADDING ADDITIONAL SPRINKLER HEADS FOR FULL PROTECTION OF A SPACE OR A COMPARTMENT. SPRINKLER LAYOUT CHANGES REQUIRED AFTER THE C-16 CONTRACTOR HAS SUBMITTED SHOP DRAWINGS FOR REVIEW SHALL NOT WARRANT A CHANGE ORDER IF PLANS SUBMITTED WERE RECEIVED WITH DEFICIENCIES OR CODE VIOLATIONS.

FIRE SPRINKLER LEGEND

SYMBOL	DESCRIPTION
1 / FP1	DETAIL DESIGNATION; DETAIL NUMBER; SHEET NO. WHERE SHOWN
X X	HYDRAULIC CALCULATION REFERENCE NODE
SB2	LATERAL SEISMIC BRACE
SB1	LONGITUDINAL SEISMIC BRACE
	FOUR WAY BRACE
	FIRE SPRINKLER RISER
	GROOVED COUPLING
	BRANCH LINE HANGER DESIGNATION
	MAIN HANGER DESIGNATION
	BRANCH LINE WITH SURGE RESTRAINER
	CHANGE IN ELEVATION
	CAP
	PLUG
	VALVE
	SPRINKLER HEAD COVERAGE (IN SQUARE FEET)
	MECHANICAL TEE
	END OF LINE RESTRAINT
	EXISTING FIRE SPRINKLER PIPE
	NEW FIRE SPRINKLER PIPE
	FIRE SPRINKLER PENDENT HEAD
	FIRE SPRINKLER UPRIGHT HEAD
	FIRE SPRINKLER SIDEWALL
BOR	BASE OF RISER
TOR	TOP OF RISER

GENERAL NOTES

1. THE SYSTEM DESIGN AND INSTALLATION SHALL COMPLY WITH NFPA 13, 2016 EDITION AND DIVISION OF THE STATE ARCHITECT.
2. SYSTEM DESIGN IS FOR: ORDINARY HAZARD GROUP 2
3. ALL PIPE 2" AND SMALLER SHALL BE SCHEDULE 40, GALVANIZED STEEL ANSI/ASTM A53, ASTM A795.
4. ALL PIPE 2 1/2" - 6" SHALL BE SCHEDULE 40, GALVANIZED STEEL ANSI/ASTM A53, ASTM A795.
5. CITY WATER SUPPLY INFORMATION:
   STATIC: 51 PSI RESIDUAL: 47 PSI FLOW: 1550 GPM
6. THREADED FITTINGS SHALL BE CLASS 125 THREADED DUCTILE IRON ASME B16.3.
7. ALL THREADED PIPE AND FITTINGS SHALL HAVE THREADS CUT TO ANSI/ASME STANDARD B1.20.1.
8. ALL PIPE WELDING SHALL BE IN COMPLIANCE WITH THE REQUIREMENTS AWS D10.9 (STANDARD FOR BUILDING SERVICE PIPING), LEVEL AR-3
9. ALL PIPE SHALL BE EARTHQUAKE BRACED AS OUTLINED IN NFPA 13, 2016 EDITION, SECTION 9.3.
10. ALL HANGER COMPONENTS AND INSTALLATION SHALL BE IN ACCORDANCE WITH NFPA 13, 2016 EDITION, SECTION 9.1 AND 9.2.
11. ELECTRICAL WIRING AND ANY PAINTING OF THE PIPE THAT MAY BE REQUIRED SHALL BE BY OTHERS.
12. ALL NEW PIPING IS TO BE HYDROSTATICALLY TESTED TO CODE FOR A PERIOD NOT LESS THAN TWO HOURS.
13. FLOW AND TAMPER SWITCHES ARE TO BE CONNECTED TO FIRE ALARM PANEL.
14. ALL ELECTRICAL WIRING TO BE PROVIDED BY ELECTRICAL CONTRACTOR.
15. FIRE SPRINKLER SUPPLY AND STUB OUT SHALL BE INSTALLED, FLUSHED, AND TESTED PER NFPA 24.
16. MAIN FIRE PANEL, VALVE MONITORING, WATER FLOW ALARM AND TROUBLE SIGNALS SHALL BE DISTINCTLY DIFFERENT AND SHALL BE AUTOMATICALLY TRANSMITTED TO AN APPROVED CENTRAL STATION MONITORING LOCATION.
17. PROVIDE EXPOSED THREADS AND WELD ON PIPE WITH CORROSION RESISTANT PAINT EQUAL TO RUSTOLEUM. PREP PIPE FOR PAINTING AFTER INSTALLATION.

SCOPE OF WORK

PROJECT DESCRIPTION: NEW FIRE SPRINKLER SYSTEM TO ACCOMMODATE NEW BUILDING CONSTRUCTION

OWNER: DAVIS JOINT UNIFIED SCHOOL DISTRICT

CODE ANALYSIS:

TOTAL BUILDING AREA: 2080 SQ. FT. BUILDING HEIGHT: 18'-8"

CONSTRUCTION TYPE: V-B OCCUPANCY TYPE: S-2

VICINITY MAP

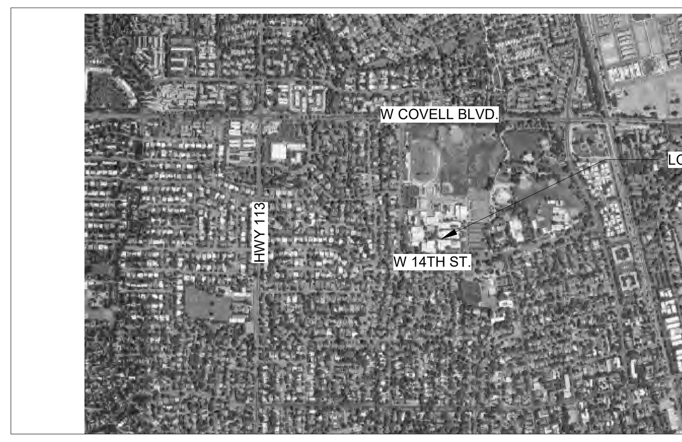

OVERHEAD FIRE SPRINKLER SYSTEM NOTES

1. NFPA 13 (2016) SEC. 10.10.2.1, UNDERGROUND MAINS AND LEAD-IN CONNECTIONS TO SYSTEM RISERS SHALL BE COMPLETELY FLUSHED BEFORE CONNECTION IS MADE TO THE OVERHEAD FIRE SPRINKLER PIPING SYSTEM. (WITNESSED BY THE INSPECTOR OF RECORD)
2. NFPA 13 (2016) SEC. 9.3.4.2, CLEARANCE SHALL BE PROVIDED AROUND ALL PIPING EXTENDING THROUGH WALLS, FLOORS, PLATFORMS AND FOUNDATIONS INCLUDING DRAINS SUCH THAT THE DIAMETER OF THE HOLES IS 2 INCHES LARGER THAN THE PIPE FOR PIPE UP TO 3", AND 4" LARGER THAN THE PIPE FOR PIPE 4" AND LARGER.
3. NFPA 13 (2016) SEC. 25.2.1, ALL INTERIOR PIPING AND APPURTENANCES SUBJECTED TO SYSTEM WORKING PRESSURE SHALL BE HYDROSTATICALLY TESTED AT 200 PSI AND SHALL MAINTAIN THAT PRESSURE WITHOUT LOSS FOR 2 HOURS. (WITNESSED BY IOR)
4. NFPA 13 (2016) SEC. 6.2.9.5, VERIFY THAT THE SPARE SPRINKLER HEAD CABINET INCLUDES A WRENCH AND NO FEWER THAN A TOTAL OF (6) SPARE SPRINKLER HEADS MATCHING THE TYPES AND TEMPERATURE RATINGS IN EACH PROTECTED BUILDING FOR SYSTEMS WITH LESS THAN 300 SPRINKLERS, AND (12) SPARE SPRINKLERS FOR SYSTEMS WITH 300-1000 SPRINKLERS.
5. NFPA 13 (2016) SEC. 9.3.6, PROVIDE RESTRAINT OF BRANCH LINES BY USING ONE OF THE FOLLOWING:
   A. A LISTED SWAY BRACE ASSEMBLY
   B. A WRAPAROUND U-HOOK SATISFYING THE REQUIREMENTS OF 9.3.5.5.11
   C. NO. 12, 440-LB WIRE INSTALLED AT LEAST 45 DEGREES FROM THE VERTICAL PLANE AND ANCHORED ON BOTH SIDES OF THE PIPE.
   D. A HANGER NO LESS THAN 45 DEGREES FROM VERTICAL INSTALLED WITHIN 6 INCHES OF THE VERTICAL HANGER ARRANGED FOR RESTRAINT AGAINST UPWARD MOVEMENT, PROVIDED IT IS UTILIZED SUCH THAT L/R DOES NOT EXCEED 400, WHERE THE ROD SHALL EXTEND TO THE PIPE OR HAVE A SURGE CLIP INSTALLED.
6. NFPA 13 (2016) SEC. 9.2.3.7, SPRIGS 4 FT OR LONGER SHALL BE RESTRAINED AGAINST LATERAL MOVEMENT TO PREVENT DAMAGE TO PIPING.
7. NFPA 72 (2016) SEC. 17.12.2, SPRINKLER FLOW SWITCHES SHALL BE TESTED BY IOR TO CONFIRM THAT WHEN THE INSPECTOR'S TEST VALVE IS ACTIVATED AN ALARM WILL SOUND IN NO LESS THAN 20 SECONDS AND NOT MORE THAT 90 SECONDS.
8. WATER FLOW ALARM SHALL BE WIRED AND MONITORED PER CBC (2019) SEC. 903.4.1, ALARM, SUPERVISORY, AND TROUBLE SIGNALS SHALL BE DISTINCTLY DIFFERENT AND SHALL BE AUTOMATICALLY TRANSMITTED TO AN APPROVED SUPERVISING STATION OR, WHERE APPROVED BY THE FIRE CODE OFFICIAL, SHALL SOUND AN AUDIBLE SIGNAL AT A CONSTANTLY ATTENDED LOCATION.
9. NFPA 13 (2016) SEC. 6.8.2.1, THE ALARM APPARATUS FOR A WET PIPE SYSTEMS SHALL CONSIST OF A LISTED ALARM CHECK VALVE OR OTHER LISTED WATERFLOW DETECTION ALARM DEVICE WITH THE NECESSARY ATTACHMENTS REQUIRED TO GIVE AN ALARM.
10. NFPA 13 (2016) SEC. 25.5, HYDRAULIC CALCULATION DESIGN DATA PLACARDS ARE TO BE ATTACHED TO THE FIRE SPRINKLER SYSTEM RISER.
11. NFPA 13 (2016) SEC. 25.1, THE FIRE SPRINKLER CONTRACTOR (C-16), SHALL COMPLETE AND SIGN THE CONTRACTOR'S MATERIAL AND TEST CERTIFICATE FOR THE OVERHEAD FIRE SPRINKLER SYSTEM USING THE FORM IN FIGURE 25.1. THIS FORM SHALL BE GIVEN TO THE DSA PROJECT INSPECTOR WHO WILL TURN IT IN FOR DSA RECORDS.
12. NFPA 13 (2016) SEC. 25.2.3.4, THE MAIN DRAIN VALVE SHALL BE OPENED AND REMAIN OPEN UNTIL THE SYSTEM PRESSURE STABILIZES. STATIC AND RESIDUAL PRESSURES SHALL BE RECORDED ON THE CONTRACTOR'S MATERIAL AND TEST CERTIFICATE. THE TEST IS TO BE WITNESSED BY THE INSPECTOR OF RECORD - IOR.
13. GENERAL INFORMATION PLACARD SHALL BE ATTACHED TO EACH RISER PER NFPA 13 SEC. 25.6.
14. TITLE 19. ARTICLE 906(A) A LABEL OF THE SELF-ADHESIVE TYPE SHALL BE PLACED ON THE FIRE DEPARTMENT CONNECTION OR ON THE RISER FOR FIRE SPRINKLER SYSTEM WITH THE DATE OF SERVICE AND/OR DATE INSTALLATION WAS PERFORMED AND LICENSE NUMBER OF THE PERSON PERFORMING SERVICE WORK.

IDENTIFICATION STAMP
DIV. OF THE STATE ARCHITECT
APP: 02-119490 INC:
REVIEWED FOR
SS ☑ FLS ☑ ACS ☑
DATE: 09/13/2022

LPA
ARCHITECTURE ENGINEERING INTERIORS
LANDSCAPE ARCHITECTURE PLANNING
916-287-2400 Office
916-287-2401 Fax
LPADesignStudios.com
431 I Street,
Suite 107
Sacramento, California 95814

LP CONSULTING ENGINEERS
MEP & FS / Sustainability / CxA
1209 Pleasant Grove Blvd.
Roseville, CA 95678
p 916-771-0778
www.lpengineers.com
Job #: 21-2018

REGISTERED PROFESSIONAL ENGINEER
SEAN POURVAKIL
M 32311
REN. 6-30-23
MECHANICAL
STATE OF CALIFORNIA

This document and all other project documents, ideas, aesthetics and designs incorporated therein are instruments of service. All project documents are copyright protected, are the property of LPA, Inc. (LPA) and cannot be lawfully used in whole or in part for any project or purpose except as set forth in the contractual agreement between LPA and its Client. The unauthorized disclosure and/or use of the project documents (including the creation of derivative works), may give rise to liability for copyright infringement, unlawful disclosure, use or misappropriation of property rights held by LPA. The unauthorized use of the project documents will give rise to the recovery of monetary losses and damages including attorney fees and costs for which the unauthorized user will be held liable.
Project documents describe the design intent of the work and are not a representation of as-built or existing conditions. LPA is not responsible for any discrepancies between the project documents and the existing conditions.

© LPA, Inc.

DAVIS SR HIGH SCHOOL
AQUATICS CENTER
315 W 14TH ST
DAVIS, CA 95616

Developed for
DAVIS JOINT UNIFIED SCHOOL DISTRICT

Revision	Date

Submittal	Date
50% DD REVIEW	06/15/2021
100% DD SUBMITTAL	07/26/2021
50% CD REVIEW	10/08/2021
100% CD DSA SUBMITTAL	10/22/2021
DSA SUBMITTAL	03/24/2022

Job Number	1904413
Date Published	03/24/2022
Checked By	TH
Scale	

FIRE SPRINKLER LEGEND, NOTES, AND SCHEDULES

FP0.00

SITE UNDERGROUND NOTE

FIRE PROTECTION SITE UNDERGROUND PLAN IS USED FOR REFERENCING FIRE SPRINKLER HYDRAULIC CALCULATIONS ONLY. SEE CIVIL PLANS FOR THE INSTALLATION OF UNDERGROUND PIPING, DEVICES, DETAILS, AND ALL REQUIREMENTS OF THE SITE UNDERGROUND UTILITIES.

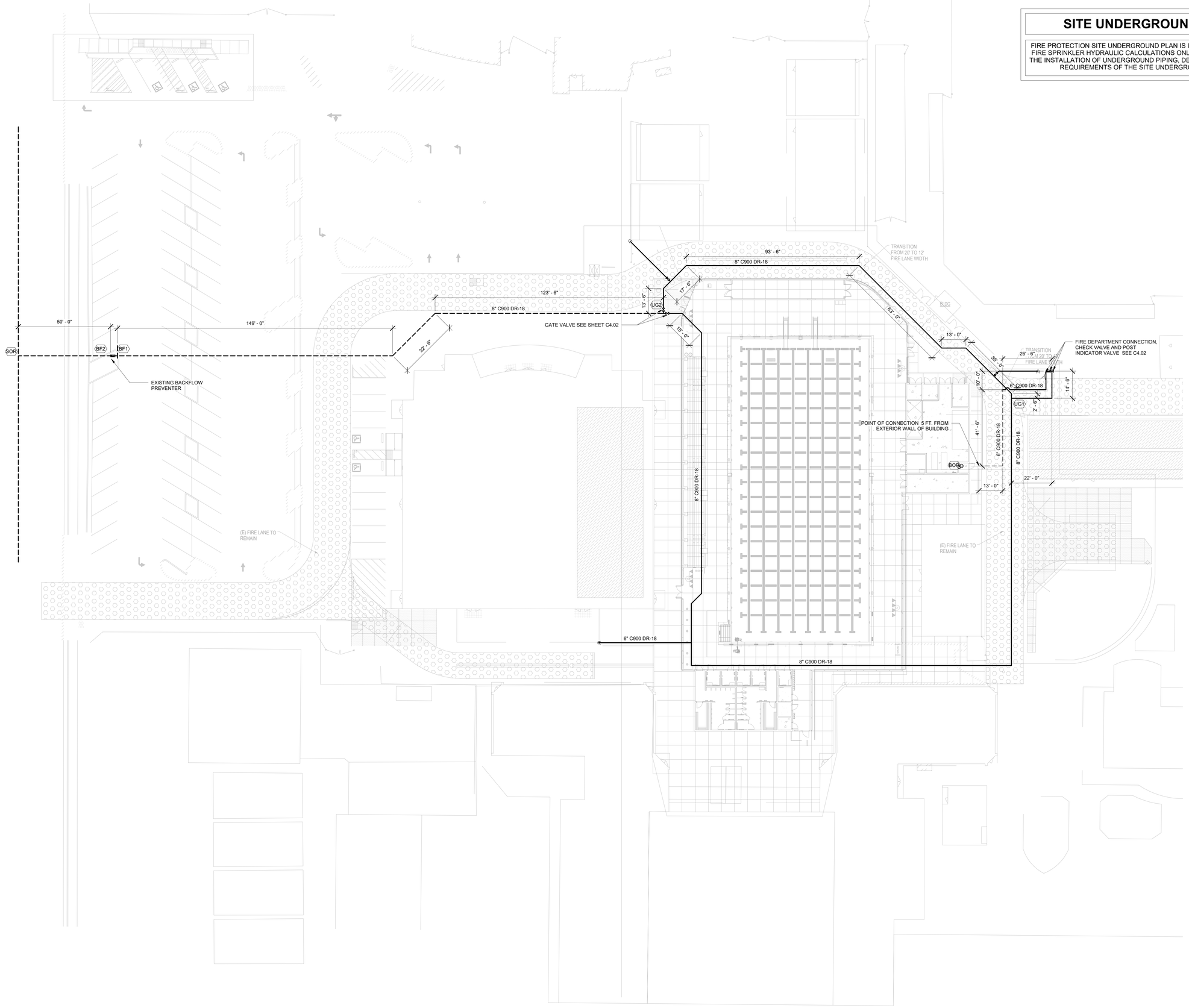

FIRE SPRINKLER SITE PLAN | 1" = 20'-0" | 1

IDENTIFICATION STAMP
DIV. OF THE STATE ARCHITECT
APP: 02-119490 INC:
REVIEWED FOR
SS ☑ FLS ☑ ACS ☑
DATE: 09/13/2022

LPA

ARCHITECTURE ENGINEERING INTERIORS
LANDSCAPE ARCHITECTURE PLANNING

916-287-2400 Office

916-287-2401 Fax

LPADesignStudios.com

431 I Street,
Suite 107
Sacramento, California 95814

MEP & FS / Sustainability / CxA

CONSULTING ENGINEERS

1209 Pleasant Grove Blvd.
Roseville, CA 95678
p 916-771-0778

www.lpengineers.com
Job #: 21-2018

REGISTERED PROFESSIONAL ENGINEER
SEAN POURVAZIR
M 32311
REN. 6-30-23
MECHANICAL
STATE OF CALIFORNIA

This document and all other project documents, ideas, aesthetics and designs incorporated therein are instruments of service. All project documents are copyright protected, are the property of LPA, Inc. (LPA) and cannot be lawfully used in whole or in part for any project or purpose except as set forth in the contractual agreement between LPA and its Client. The unauthorized disclosure and/or use of the project documents (including the creation of derivative works), may give rise to liability for copyright infringement, unlawful disclosure, use or misappropriation of property rights held by LPA. The unauthorized use of the project documents will give rise to the recovery of monetary losses and damages including attorney fees and costs for which the unauthorized user will be held liable.
Project documents describe the design intent of the work and are not a representation of as-built or existing conditions. LPA is not responsible for any discrepancies between the project documents and the existing conditions.

© LPA, Inc.

DAVIS SR HIGH SCHOOL
AQUATICS CENTER
315 W 14TH ST
DAVIS, CA 95616

Developed for
DAVIS JOINT UNIFIED SCHOOL DISTRICT

Revision	Date

Submittal	Date
50% DD REVIEW	06/15/2021
100% DD SUBMITTAL	07/26/2021
50% CD REVIEW	10/08/2021
100% CD DSA SUBMITTAL	10/22/2021
DSA SUBMITTAL	03/24/2022

Job Number	1904413
Date Published	03/24/2022
Checked By	TH
Scale	

FIRE SPRINKLER
SITE PLAN

FP1.00

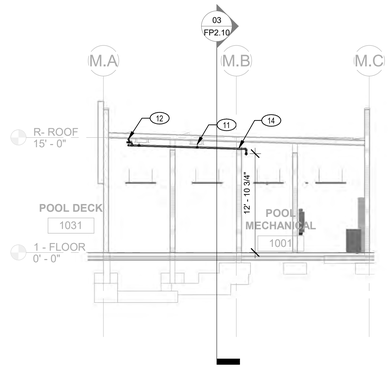

FIRE SPRINKLER SECTION 1 | 1/8" = 1'-0" | 02

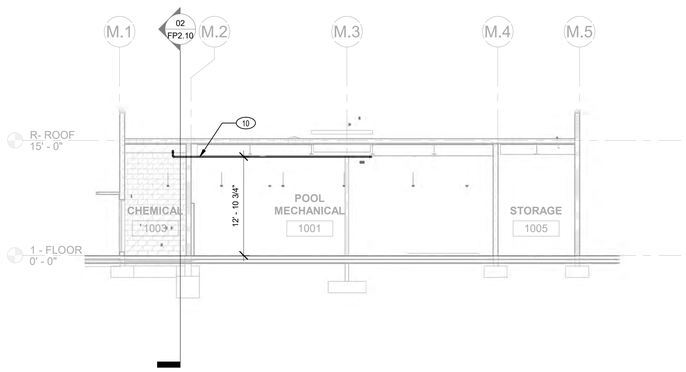

FIRE SPRINKLER SECTION 2 | 1/8" = 1'-0" | 03

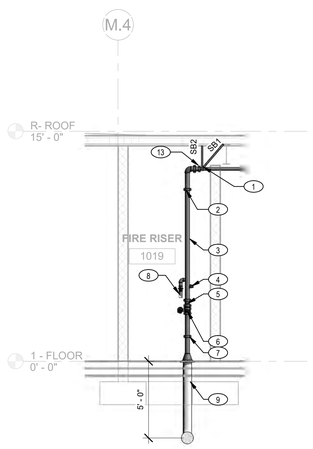

FIRE SPRINKLER SECTION 3 | 1/4" = 1'-0" | 04

FIRE SPRINKLER HEAD SCHEDULE

SYMBOL	TYPE	TEMP	ORF	K	FINISH	QUANTITY
○	VK338 QR SSU SPRINKLER	200	1/2"	5.6	STAINLESS	2

HYDRAULIC CALCULATION

THIS BUILDING IS HYDRAULICALLY DESIGNED USING CRITERIA FROM NFPA 13, 2016 EDITION.

LOCATION: CHEMICAL STORAGE RM 1002, RM 1003
REMOTE AREA #: 1

BASIS OF DESIGN

HAZARD CLASSIFICATION:	OH2
DESIGN DENSITY:	0.20
REMOTE AREA % INCREASE/DECREASE:	N/A
ACTUAL SIZE OF REMOTE AREA (SF):	N/A

SYSTEM DEMAND AT BASE OF RISER (BOR)

PRESSURE REQUIRED (PSI):	33.1
FLOW REQUIRED (GPM):	52.7
ADDED HOSE - INSIDE: N/A OUTSIDE: 250	

SYSTEM DEMAND @ SOURCE (TEST)

PRESSURE REQUIRED (PSI):	45.3
FLOW REQUIRED (GPM):	302.9
PRESSURE AVAILABLE (PSI):	50.8
SAFETY MARGIN (%):	10.7%

SPRINKLER HEAD(S)

# OF SPRINKLERS CALCULATED	2
THREAD:	1/2"
K-FACTOR:	5.6K
RESPONSE TYPE:	200F QR
ORIENTATION:	UPR
SIN #:	VK338
MAXIMUM AREA PER SPRINKLER:	130 SQFT
MINIMUM PRESSURE REQUIRED:	7 PSI
MINIMUM DISCHARGE REQUIRED:	26.0 GPM

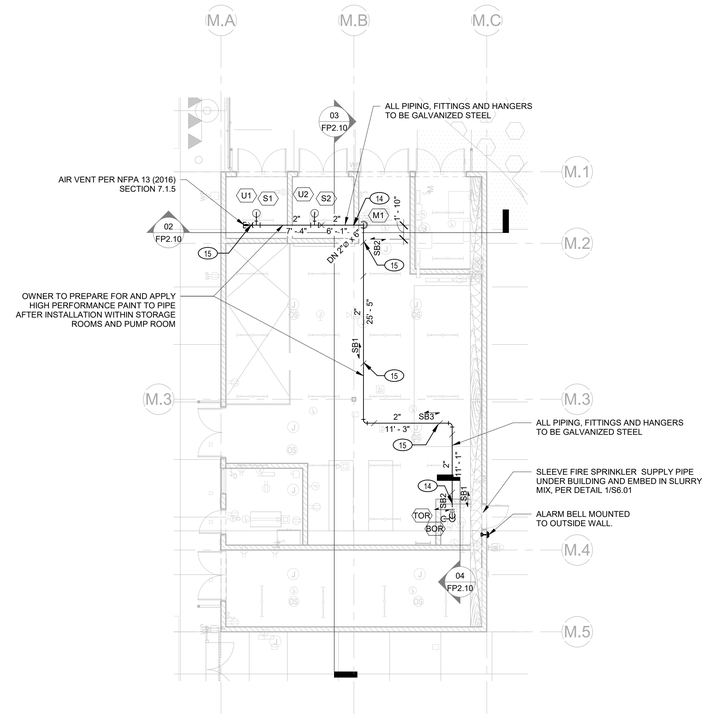

FIRE SPRINKLER PIPING PLAN | 1/8" = 1'-0" | 01

KEY NOTES

#	
1	2" GALVANIZED SCH.40 FIRE SPRINKLER MAIN PIPE (HANGERS AT 15 FT. MAX. SPACING)
2	FLEXIBLE COUPLING WITHIN 24" OF TOP OF RISER
3	3" GALVANIZED SCH. 40 SPRINKLER RISER
4	FLOW SWITCH CONNECT TO ALARM BELL AND FIRE ALARM SYSTEM
5	CHECK VALVE
6	BUTTERFLY VALVE CONNECT TAMPER SWITCH TO FIRE ALARM SYSTEM
7	FLEXIBLE COUPLING WITHIN 24" OF FLOOR
8	2" GALVANIZED SCH.40 DRAIN PIPE. CUT END OF PIPE TO 45°. ROUTE TO HUB DRAIN PER DETAIL 12/P6.10
9	6" AMES IN BUILDING RISER
10	2" GALVANIZED SCH. 40 PIPE
11	STANDARD SPRAY QUICK-RESPONSE UPRIGHT FIRE SPRINKLER
12	AIR VENT PER NFPA 13 (2016) SECTION 7.1.5
13	FOUR WAY BRACE (WITHIN 24" HORIZONTALLY OF TOP OF RISER)
14	PROVIDE HOLE THROUGH CMU WITH DIAMETER THAT IS 2" LARGER THAN PIPE SIZE. SEE DETAIL 18/A9.11 FOR FIRE RATED ASSEMBLY THROUGH WALL.
15	HANGER WITH SURGE RESTRAINER PER DETAIL 2/FP9.00

GENERAL NOTE

1. ALL OVERHEAD PIPE TO BE HUNG WITHIN 6 INCHES OF STRUCTURE FOR OMISSION OF LATERAL SEISMIC BRACING PER NFPA 13 (2016) SECTION 9.3.5.5.10 AND SECTION 9.3.5.5.10.2(1)

2. ALL PIPE, FITTINGS, AND HANGERS TO BE GALVANIZED OR HAVE A CORROSION RESISTANCE FINISH. NO BLACK PIPE OR FITTINGS ARE TO BE USED.

IDENTIFICATION STAMP
DIV. OF THE STATE ARCHITECT
APP: 02-119490 INC:
REVIEWED FOR
SS ☑ FLS ☑ ACS ☑
DATE: 09/13/2022

LPA
ARCHITECTURE ENGINEERING INTERIORS
LANDSCAPE ARCHITECTURE PLANNING

916-287-2400 Office
916-287-2401 Fax
LPADesignStudios.com
431 I Street,
Suite 107
Sacramento, California 95814

MEP & FS / Sustainability / CxA
CONSULTING ENGINEERS
1209 Pleasant Grove Blvd.
Roseville, CA 95678
p 916-771-0778
www.lpengineers.com
Job #: 21-2018

REGISTERED PROFESSIONAL ENGINEER
SEAN P. FOURVY
M 32311
REN. 6-30-23
MECHANICAL
STATE OF CALIFORNIA

This document and all other project documents, ideas, aesthetics and designs incorporated therein are instruments of service. All project documents are copyright protected, are the property of LPA, Inc. (LPA) and cannot be lawfully used in whole or in part for any project or purpose except as set forth in the contractual agreement between LPA and its Client. The unauthorized disclosure and/or use of the project documents (including the creation of derivative works), may give rise to liability for copyright infringement, unlawful disclosure, use or misappropriation of property rights held by LPA. The unauthorized use of the project documents will give rise to the recovery of monetary losses and damages including attorney fees and costs for which the unauthorized user will be held liable.
Project documents describe the design intent of the work and are not a representation of as-built or existing conditions. LPA is not responsible for any discrepancies between the project documents and the existing conditions.

© LPA, Inc.

DAVIS SR HIGH SCHOOL
AQUATICS CENTER
315 W 14TH ST
DAVIS, CA 95616

Developed for
DAVIS JOINT UNIFIED SCHOOL DISTRICT

Revision	Date

Submittal	Date
50% DD REVIEW	06/15/2021
100% DD SUBMITTAL	07/26/2021
50% CD REVIEW	10/08/2021
100% CD DSA SUBMITTAL	10/22/2021
DSA SUBMITTAL	09/24/2022

Job Number	1904413
Date Published	03/24/2022
Checked By	TH
Scale	

FIRE SPRINKLER PIPING PLAN AND SECTIONS

FP2.10

TOLBrace™ Seismic Bracing Calculations

Project Address: Davis HS Aquatics, 315 W. 14th St, Davis, Ca
Job # 21-2018

Contractor: LP Consulting Engineers
Address: 1209 Pleasant Grove Blvd. Roseville, CA 95678
Phone: 916-771-0778
Licence:

Calculations based on 2010 NFPA Pamphlet #13

Brace Information

Maximum Brace Length	7' 0" (2.134 m)
Diameter of Brace	1" Sch.40
Type of Brace	Sch. 40
Angle of Brace	60° Min.
Least Rad. of Gyration	0.42" (11 mm)
L/R Value	200
Max Horizontal Load	1604 lbs (728 kg)

TOLCO™ Brace Components

TOLCO™ Component	Listed Load	Adjusted Load
Fig. 1001 Clamp	2015 lbs (914 kg)	1745 lbs (792 kg)
Fig.980 Universal Swivel	2015 lbs (914 kg)	1745 lbs (792 kg)
Fig.828 Along Beam	2015 lbs (914 kg)	1744 lbs (791 kg)

*Calculation Based on CONCENTRIC Loading
*Please Note: These calculations are for TOLCO™ components only. Use of any other components voids these calculations and the listing of the assembly.

Fastener Information

Orientation to Connecting Surface: NFPA Type C

Fastener

Type	Fig.828 Along Beam
Diameter	N/A
Length	N/A
Maximum Load	1744 lbs (791 kg)
Prying Factor	N/A

Seismic Brace Assembly Detail

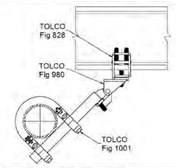

Brace Identification on Plans SB2

Brace Type Lateral [X] Longitudinal [ ] 4-Way [ ]

Sprinkler System Load Calculation (Fpw = CpWp)

Cp = 0.4596

Diameter	Type	Length	Total Length	Weight Per Unit Length	Total Weight
2" (50 mm)	Sch. 40	40 ft (12.2 m)	40 ft (12.2 m)	5.13 lb/ft (7.63 kg/m)	205 lbs (93 kg)

Subtotal Weight	205 lbs (93 kg)
Wp (incl. 15%)	236 lbs (107 kg)
Total (Fpw)	108 lbs (49 kg)
Maximum Fpw per 9.3.5.5.2 (if applicable)	245 lb (111 kg)

Main Size	Type/Sch.	Spacing (ft)
2"	Sch. 40	40

(TOLBrace™ Version 5) Use of TOLBrace™ is subject to terms and conditions per the end user license agreement

TOLBrace™ Seismic Bracing Calculations

Project Address: Davis HS Aquatics, 315 W. 14th St, Davis, Ca
Job # 21-2018

Contractor: LP Consulting Engineers
Address: 1209 Pleasant Grove Blvd. Roseville, CA 95678
Phone: 916-771-0778
Licence:

Calculations based on 2010 NFPA Pamphlet #13

Brace Information

Maximum Brace Length	7' 0" (2.134 m)
Diameter of Brace	1" Sch.40
Type of Brace	Sch. 40
Angle of Brace	60° Min.
Least Rad. of Gyration	0.42" (11 mm)
L/R Value	200
Max Horizontal Load	1604 lbs (728 kg)

TOLCO™ Brace Components

TOLCO™ Component	Listed Load	Adjusted Load
Fig. 4LA Clamp	1000 lbs (454 kg)	866 lbs (393 kg)
Fig.980 Universal Swivel	2015 lbs (914 kg)	1745 lbs (792 kg)
Fig.828 Along Beam	2015 lbs (914 kg)	1744 lbs (791 kg)

*Calculation Based on CONCENTRIC Loading
*Please Note: These calculations are for TOLCO™ components only. Use of any other components voids these calculations and the listing of the assembly.

Fastener Information

Orientation to Connecting Surface: NFPA Type C

Fastener

Type	Fig.828 Along Beam
Diameter	N/A
Length	N/A
Maximum Load	1744 lbs (791 kg)
Prying Factor	N/A

Seismic Brace Assembly Detail

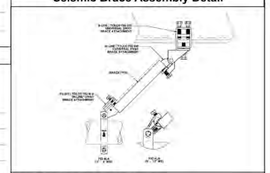

Brace Identification on Plans SB3

Brace Type Lateral [ ] Longitudinal [X] 4-Way [ ]

Sprinkler System Load Calculation (Fpw = CpWp)

Cp = 0.4596

Diameter	Type	Length	Total Length	Weight Per Unit Length	Total Weight
2" (50 mm)	Sch. 40	80 ft (24.4 m)	80 ft (24.4 m)	5.13 lb/ft (7.63 kg/m)	410 lbs (186 kg)

Subtotal Weight	410 lbs (186 kg)
Wp (incl. 15%)	471 lbs (214 kg)
Total (Fpw)	217 lbs (98 kg)
Maximum Fpw per 9.3.5.5.2 (if applicable)	N/A

Main Size	Type/Sch.	Spacing (ft)
2"	Sch. 40	80

(TOLBrace™ Version 5) Use of TOLBrace™ is subject to terms and conditions per the end user license agreement

TOLBrace™ Seismic Bracing Calculations

Project Address: Davis HS Aquatics, 315 W. 14th St, Davis, Ca
Job # 21-2018

Contractor: LP Consulting Engineers
Address: 1209 Pleasant Grove Blvd. Roseville, CA 95678
Phone: 916-771-0778
Licence:

Calculations based on 2010 NFPA Pamphlet #13

Brace Information

Maximum Brace Length	7' 0" (2.134 m)
Diameter of Brace	1" Sch.40
Type of Brace	Sch. 40
Angle of Brace	45° Min.
Least Rad. of Gyration	0.42" (11 mm)
L/R Value	200
Max Horizontal Load	1310 lbs (594 kg)

TOLCO™ Brace Components

TOLCO™ Component	Listed Load	Adjusted Load
Fig. 4LA Clamp	1000 lbs (454 kg)	707 lbs (321 kg)
Fig.980 Universal Swivel	2015 lbs (914 kg)	1425 lbs (646 kg)
Fig.828 Across Beam	2015 lbs (914 kg)	1425 lbs (646 kg)

*Calculation Based on CONCENTRIC Loading
*Please Note: These calculations are for TOLCO™ components only. Use of any other components voids these calculations and the listing of the assembly.

Fastener Information

Orientation to Connecting Surface: NFPA Type B

Fastener

Type	Fig.828 Across Beam
Diameter	N/A
Length	N/A
Maximum Load	1425 lbs (646 kg)
Prying Factor	N/A

Seismic Brace Assembly Detail

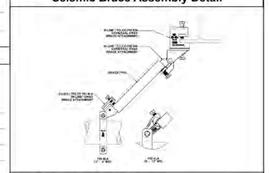

Brace Identification on Plans SB1

Brace Type Lateral [ ] Longitudinal [X] 4-Way [ ]

Sprinkler System Load Calculation (Fpw = CpWp)

Cp = 0.4596

Diameter	Type	Length	Total Length	Weight Per Unit Length	Total Weight
2" (50 mm)	Sch. 40	80 ft (24.4 m)	80 ft (24.4 m)	5.13 lb/ft (7.63 kg/m)	410 lbs (186 kg)

Subtotal Weight	410 lbs (186 kg)
Wp (incl. 15%)	471 lbs (214 kg)
Total (Fpw)	217 lbs (98 kg)
Maximum Fpw per 9.3.5.5.2 (if applicable)	N/A

Main Size	Type/Sch.	Spacing (ft)
2"	Sch. 40	80

(TOLBrace™ Version 5) Use of TOLBrace™ is subject to terms and conditions per the end user license agreement

OSHPD

315 W 14th St, Davis, CA 95616, USA

Latitude, Longitude: 38.55717, -121.7501789

Date	7/13/2021, 7:23:55 AM
Design Code Reference Document	ASCE7-16
Risk Category	II
Site Class	D - Default (See Section 11.4.3)

Type	Value	Description
S_S	0.849	MCE_R ground motion. (for 0.2 second period)
S_1	0.335	MCE_R ground motion. (for 1.0s period)
S_{MS}	1.019	Site-modified spectral acceleration value
S_{M1}	null -See Section 11.4.8	Site-modified spectral acceleration value
S_{DS}	0.679	Numeric seismic design value at 0.2 second SA
S_{D1}	null -See Section 11.4.8	Numeric seismic design value at 1.0 second SA

Type	Value	Description
SDC	null -See Section 11.4.8	Seismic design category
F_a	1.2	Site amplification factor at 0.2 second
F_v	null -See Section 11.4.8	Site amplification factor at 1.0 second
PGA	0.357	MCE_G peak ground acceleration
F_{PGA}	1.243	Site amplification factor at PGA
PGA_M	0.444	Site modified peak ground acceleration
T_L	8	Long-period transition period in seconds
SsRT	0.849	Probabilistic risk-targeted ground motion. (0.2 second)
SsUH	0.916	Factored uniform-hazard (2% probability of exceedance in 50 years) spectral acceleration
SsD	1.5	Factored deterministic acceleration value. (0.2 second)
S1RT	0.335	Probabilistic risk-targeted ground motion. (1.0 second)
S1UH	0.347	Factored uniform-hazard (2% probability of exceedance in 50 years) spectral acceleration
S1D	0.6	Factored deterministic acceleration value. (1.0 second)
PGAd	0.5	Factored deterministic acceleration value. (Peak Ground Acceleration)
C_{RS}	0.927	Mapped value of the risk coefficient at short periods
C_{R1}	0.935	Mapped value of the risk coefficient at a period of 1 s

TOLBrace™ Seismic Calculation

Davis HS Aquatics — Job # 21-2018
315 W. 14th St

Brace Identification	SB2
Brace Type (Per NFPA#13)	NFPA Type C
Braced Pipe (ft)	2" Sch.40 Steel Pipe
Spacing of Brace	40' 0" (12.19 m)
Orientation of Brace	Lateral
Bracing Material	1" Sch.40
Maximum Brace Length	7' 0" (2.13 m)
Slenderness Ratio used for Load Calculation	200
True Angle of Brace for Calculation	60°
Type of Fastener	Fig.828 Along Beam
Length of Fastener	N/A

Summary of Pipe within Zone of Influence

2" Sch.40 Steel Pipe (50.8 mm)	40 ft (12.2 m)

G-Factor Used	0.4596
Allowance for Heads and Fittings	15%
Conclusions	
Total Adjusted Load of Pipe in Zone of Influence	108 lbs (49 kg)
Material Capacity	1604 lbs (728 kg)
Fastener Capacity	1744 lbs (791 kg)
Fig. 1001 Clamp	1745 lbs (792 kg)
Fig.980 Universal Swivel	1745 lbs (792 kg)
Structural Member	Steel Framing

Calculations prepared by Ken Thomas

* The description of the Structural Member is for informational purposes only.
TOLBrace™ software calculates the brace assembly only, not the structure it is attached to.
Calculated with TOLBrace™ 5
Visit us at www.tolco.com

TOLBrace™ Seismic Calculation

Davis HS Aquatics — Job # 21-2018
315 W. 14th St

Brace Identification	SB3
Brace Type (Per NFPA#13)	NFPA Type C
Braced Pipe (ft)	2" Sch.40 Steel Pipe
Spacing of Brace	80' 0" (24.38 m)
Orientation of Brace	Longitudinal
Bracing Material	1" Sch.40
Maximum Brace Length	7' 0" (2.13 m)
Slenderness Ratio used for Load Calculation	200
True Angle of Brace for Calculation	60°
Type of Fastener	Fig.828 Along Beam
Length of Fastener	N/A

Summary of Pipe within Zone of Influence

2" Sch.40 Steel Pipe (50.8 mm)	80 ft (24.4 m)

G-Factor Used	0.4596
Allowance for Heads and Fittings	15%
Conclusions	
Total Adjusted Load of Pipe in Zone of Influence	217 lbs (98 kg)
Material Capacity	1604 lbs (728 kg)
Fastener Capacity	1744 lbs (791 kg)
Fig. 4LA Clamp	866 lbs (393 kg)
Fig.980 Universal Swivel	1745 lbs (792 kg)
Structural Member	Steel Beam

Calculations prepared by Ken Thomas

* The description of the Structural Member is for informational purposes only.
TOLBrace™ software calculates the brace assembly only, not the structure it is attached to.
Calculated with TOLBrace™ 5
Visit us at www.tolco.com

TOLBrace™ Seismic Calculation

Davis HS Aquatics — Job # 21-2018
315 W. 14th St

Brace Identification	SB1
Brace Type (Per NFPA#13)	NFPA Type B
Braced Pipe (ft)	2" Sch.40 Steel Pipe
Spacing of Brace	80' 0" (24.38 m)
Orientation of Brace	Longitudinal
Bracing Material	1" Sch.40
Maximum Brace Length	7' 0" (2.13 m)
Slenderness Ratio used for Load Calculation	200
True Angle of Brace for Calculation	45°
Type of Fastener	Fig.828 Across Beam
Length of Fastener	N/A

Summary of Pipe within Zone of Influence

2" Sch.40 Steel Pipe (50.8 mm)	80 ft (24.4 m)

G-Factor Used	0.4596
Allowance for Heads and Fittings	15%
Conclusions	
Total Adjusted Load of Pipe in Zone of Influence	217 lbs (98 kg)
Material Capacity	1310 lbs (594 kg)
Fastener Capacity	1425 lbs (646 kg)
Fig. 4LA Clamp	707 lbs (321 kg)
Fig.980 Universal Swivel	1425 lbs (646 kg)
Structural Member	Steel Beam

Calculations prepared by Ken Thomas

* The description of the Structural Member is for informational purposes only.
TOLBrace™ software calculates the brace assembly only, not the structure it is attached to.
Calculated with TOLBrace™ 5
Visit us at www.tolco.com

IDENTIFICATION STAMP
DIV. OF THE STATE ARCHITECT
APP: 02-119490 INC:
REVIEWED FOR
SS ☑ FLS ☑ ACS ☑
DATE: 09/13/2022

LPA
ARCHITECTURE ENGINEERING INTERIORS
LANDSCAPE ARCHITECTURE PLANNING

916-287-2400 Office
916-287-2401 Fax
LPADesignStudios.com
431 I Street,
Suite 107
Sacramento, California 95814

MEP & FS / Sustainability / CxA
1209 Pleasant Grove Blvd.
Roseville, CA 95678
p 916-771-0778
CONSULTING ENGINEERS
www.lpengineers.com
Job #: 21-2018

REGISTERED PROFESSIONAL ENGINEER
SEAN P. FOURNY
M 32311
REN. 6-30-23
MECHANICAL
STATE OF CALIFORNIA

This document and all other project documents, ideas, aesthetics and designs incorporated therein are instruments of service. All project documents are copyright protected, are the property of LPA, Inc. (LPA) and cannot be lawfully used in whole or in part for any project or purpose except as set forth in the contractual agreement between LPA and its Client. The unauthorized disclosure and/or use of the project documents (including the creation of derivative works), may give rise to liability for copyright infringement, unlawful disclosure, use or misappropriation of property rights held by LPA. The unauthorized use of the project documents will give rise to the recovery of monetary losses and damages including attorney fees and costs for which the unauthorized user will be held liable.
Project documents describe the design intent of the work and are not a representation of as-built or existing conditions. LPA is not responsible for any discrepancies between the project documents and the existing conditions.

© LPA, Inc.

DAVIS SR HIGH SCHOOL
AQUATICS CENTER
315 W 14TH ST
DAVIS, CA 95616

Developed for
DAVIS JOINT UNIFIED SCHOOL DISTRICT

Revision	Date

Submittal	Date
50% DD REVIEW	06/15/2021
100% DD SUBMITTAL	07/26/2021
50% CD REVIEW	10/08/2021
100% CD DSA SUBMITTAL	10/22/2021
DSA SUBMITTAL	03/24/2022

Job Number	1904413
Date Published	03/24/2022
Checked By	TH
Scale	

FIRE SPRINKLER
SEISMIC
CALCULATIONS

FP4.11

1. TOLCO FIG. 828 UNIVERSAL SWAY BRACE ATTACHMENT
2. TOLCO FIG. 980 UNIVERSAL SWAY BRACE ATTACHMENT
3. BRACE PIPE - 1" SCHED. 40 (7'-0" MAX. LENGTH)
4. TOLCO FIG. 1001 PIPE CLAMP
5. TOLCO FIG. 69 BEAM CLAMP RETAINING STRAP

NOTE: BRACE TO BE INSTALLED WITHIN 6" OF SUPPORT HANGER THAT IS ABLE TO RESIST UPWARD MOVEMENT USING SURGE RESTRAINER PER DETAIL 2/FP9.00

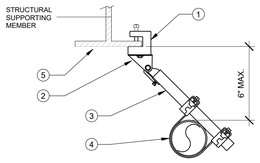

NOTE:
SEISMIC BRACES LESS THAN 60 DEGREE ANGLES SHALL HAVE A HANGER WITH ROD STIFFENER PLACED WITHIN 6" OF THE BRACE TO RESIST THE NET VERTICAL REACTION FORCE.

LATERAL EARTHQUAKE BRACE | NTS | 07

1. TOLCO FIG. 828 UNIVERSAL SWAY BRACE ATTACHMENT
2. TOLCO FIG. 980 UNIVERSAL SWAY BRACE ATTACHMENT.
3. BRACE PIPE - 1" SCHD. 40 (7'-0" MAX. LENGTH)
4. TOLCO FIG. 4L PIPE CLAMP

NOTE: BRACE TO BE INSTALLED WITHIN 6" OF SUPPORT HANGER THAT IS ABLE TO RESIST UPWARD MOVEMENT USING SURGE RESTRAINER PER DETAIL 2/FP9.00

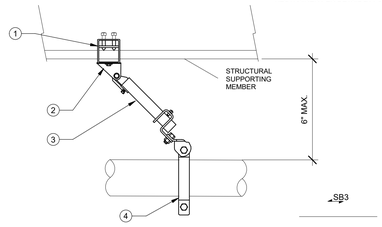

TYPE C LONGITUDINAL BRACE TO STEEL | NTS | 06

1. BUILDING PERIMETER WALL
2. BUILDING FLOOR
3. DIAMETER OF HOLE TO BE 4" LARGER THAN PIPE PER NFPA 13 (2016) SEC. 9.3.4.2 AND FILLED WITH FLEXIBLE MATERIAL COMPATIBLE WITH PIPING MATERIAL PER NFPA 13 (2016) 9.3.4.8.
4. FLANGE OR GROOVED END
5. FOOTING. SEE STRUCTURAL DRAWING S6.01
6. PIPE JOINTS SHALL NOT BE LOCATED DIRECTLY UNDER FOUNDATION FOOTINGS PER NFPA 13 (2016) 10.4.3.1.1.
7. GRV x GRV CONNECTION IN BUILDING RISER TO C900 PIPE PER NFPA 24 REQUIREMENTS (CONNECTION NOT TO BE LOCATED BENEATH BUILDING FOOTING)
8. 6" C900 UNDERGROUND SUPPLY PIPE
9. SLEEVE PIPE AND PROVIDE SLURRY CONCRETE MIX SEE DETAIL 1/S6.01
10. THRUST BLOCK

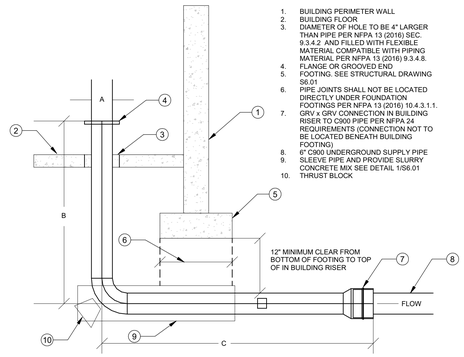

SIZE (DN)		A (OD)		B		C		WEIGHT	
IN.	MM	IN.	MM	FT	CM	FT	CM	LBS	KG
6	150	6 5/8	168	5	152	6	183	98	44

NOTE: EACH B (VERTICAL) AND C (HORIZONTAL) LEG IS CUSTOMIZABLE FROM 3' TO 20' WITH UL/FM APPROVALS.

AMES IN BUILDING RISER DETAIL | NTS | 03

1. BOLT AND NUT MOUNTED TO CENTER HOLE. 3/8" FASTENER FOR PIPE UP TO 2" DIAMETER.
2. TOLCO FIG 58 THREADED SIDE BEAM BRACKET.
3. 3/8" ALL THREAD ROD.
4. TOLCO FIG. 200 ADJUSTABLE RING HANGER
5. C-CHANNEL
6. TOLCO FIG. 25 SURGE RESTRAINER

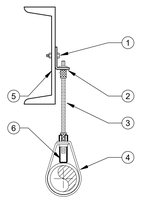

THROUGH BOLT HANGER TO C CHANNEL | NTS | 08

1. TOLCO FIG. 65XT REVERSIBLE C TYPE BEAM CLAMP.
2. LOCK NUT REQUIRED.
3. 3/8" ALL THREAD ROD.
4. TOLCO FIG. 200 ADJUSTABLE RING HANGER
5. TOLCO FIG. 69 BEAM CLAMP RETAINING STRAP.
6. SCH. 40 MAIN PIPE

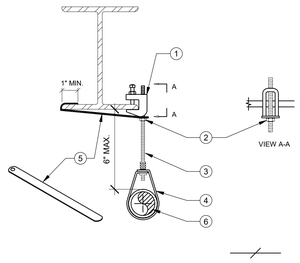

BOTTOM BEAM CLAMPS, ROD, AND RING | NTS | 05

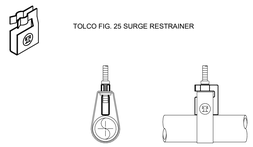

UNDERWRITERS' LABORATORIES LISTED ONLY WHEN USED WITH TOLCO BAND HANGERS FIG. 2, 2NFPA AND 200

SURGE RESTRAINER | NTS | 02

1. TOLCO FIG. 828 UNIVERSAL SWAY BRACE ATTACHMENT
2. TOLCO FIG. 980 UNIVERSAL SWAY BRACE ATTACHMENT
3. BRACE PIPE - 1" SCHD. 40 (7'-0" MAX. LENGTH)
4. TOLCO FIG. 4L PIPE CLAMP

NOTE: BRACE TO BE INSTALLED WITHIN 6" OF SUPPORT HANGER THAT IS ABLE TO RESIST UPWARD MOVEMENT USING SURGE RESTRAINER PER DETAIL 2/FP9.00

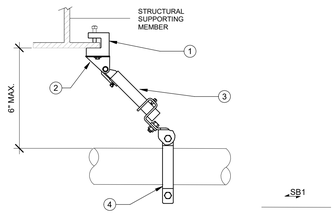

TYPE C LONGITUDINAL BRACE TO STEEL | NTS | 04

1. AGF AUTOMATIC AIR VENTING VALVE
2. 1" SCH. 40 (TYP.)
3. VICTAULIC TEE.
4. BRANCH LINE PIPING.

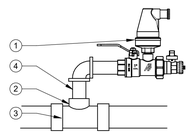

AUTOMATIC AIR VENTING VALVE | NTS | 01

IDENTIFICATION STAMP
DIV. OF THE STATE ARCHITECT
APP: 02-119490 INC:
REVIEWED FOR
SS ☑ FLS ☑ ACS ☑
DATE: 09/13/2022

LPA

ARCHITECTURE ENGINEERING INTERIORS
LANDSCAPE ARCHITECTURE PLANNING

916-287-2400 Office

916-287-2401 Fax

LPADesignStudios.com

431 I Street,
Suite 107
Sacramento, California 95814

MEP & FS / Sustainability / CxA

CONSULTING ENGINEERS

1209 Pleasant Grove Blvd.
Roseville, CA 95678
p 916-771-0778

www.lpengineers.com
Job #: 21-2018

REGISTERED PROFESSIONAL ENGINEER
SEAN P. FOURVY
M 32311
REN. 6-30-23
MECHANICAL
STATE OF CALIFORNIA

This document and all other project documents, ideas, aesthetics and designs incorporated therein are instruments of service. All project documents are copyright protected, are the property of LPA, Inc. (LPA) and cannot be lawfully used in whole or in part for any project or purpose except as set forth in the contractual agreement between LPA and its Client. The unauthorized disclosure and/or use of the project documents (including the creation of derivative works), may give rise to liability for copyright infringement, unlawful disclosure, use or misappropriation of property rights held by LPA. The unauthorized use of the project documents will give rise to the recovery of monetary losses and damages including attorney fees and costs for which the unauthorized user will be held liable.
Project documents describe the design intent of the work and are not a representation of as-built or existing conditions. LPA is not responsible for any discrepancies between the project documents and the existing conditions.

© LPA, Inc.

DAVIS SR HIGH SCHOOL
AQUATICS CENTER
315 W 14TH ST
DAVIS, CA 95616

Developed for
DAVIS JOINT UNIFIED SCHOOL DISTRICT

Revision	Date

Submittal	Date
50% DD REVIEW	06/15/2021
100% DD SUBMITTAL	07/26/2021
50% CD REVIEW	10/08/2021
100% CD DSA SUBMITTAL	10/22/2021
DSA SUBMITTAL	03/24/2022

Job Number	1904413
Date Published	03/24/2022
Checked By	TH
Scale	

FIRE SPRINKLER DETAILS

FP9.00

ABBREVIATIONS

4S/DP	4" SQUARE BY 2 1/8" DEEP BOX
ADA	AMERICAN WITH DISABILITIES ACT
A.F.F.	ABOVE FINISH FLOOR
A.F.G.	ABOVE FINISH GRADE
AWG	AMERICAN WIRE GAUGE
AMP, A	AMPERE
A.I.C.	AMPERES INTERRUPTING CAPACITY (SYMMETRICAL)
AF/AT	AMP FRAME, AMP TRIP
AHJ	AUTHORITY HAVING JURISDICTION
AS/AF	AMP SWITCH, AMP FUSE
ATS	AUTOMATIC TRANSFER SWITCH
AVG	AVERAGE
BDF	BUILDING DISTRIBUTION FRAME
BR	BRANCH
BLDG	BUILDING
CEC	CALIFORNIA ELECTRICAL CODE
CIRC., CKT.	CIRCUIT
CB	CIRCUIT BREAKER
CSFD	COMBINATION SMOKE FIRE DAMPER
C.	CONDUIT
C.O.	CONDUIT ONLY, COMPLETE WITH PULLSTRING
CONN	CONNECTED
CPT	CONTROL POWER TRANSFORMER
CLCB	CURRENT LIMITING CIRCUIT BREAKER
CLF	CURRENT LIMITING FUSE
CT	CURRENT TRANSFORMER
(D)	EXISTING TO BE DEMOLISHED
DIA	DIAMETER
DISC	DISCONNECT
DIST	DISTRIBUTION
E.C.	ELECTRICAL CONTRACTOR
EMS	ENERGY MANAGEMENT CONTROL SYSTEM
EMT	ELECTRICAL METALLIC TUBING
ENT	ELECTRICAL NON-METALLIC TUBING
EWC	ELECTRIC WATER COLLER
E.P.O.	EMERGENCY POWER OFF
E-O-L	END-OF-LINE CIRCUIT TERMINATOR
EF	EXHAUST FAN
E/G	EQUIPMENT GROUND (GREEN)
EP	EXPLOSION PROOF
(E)	EXISTING EQUIP. TO REMAIN
(ER*)	EXISTING EQUIP. TO BE RELOCATED (*CORRESPONDS TO NEW LOCATION)
FT or '	FEET
FA	FIRE ALARM
FLA	FULL LOAD AMPS
GRD	GROUND
GFCI	GROUND FAULT CIRCUIT INTERRUPTER
GFP	GROUND FAULT PROTECTION
GEC	GROUNDING ELECTRODE CONDUCTOR
HACR	HEATING AIR CONDITIONING REFRIGERATION
HOA	HAND-OFF-AUTO
HVAC	HEATING, VENTILATING AND AIR CONDITIONING
H., W., D., L.	HEIGHT, WIDTH, DEPTH, LENGTH
HID	HIGH INTENSITY DISCHARGE
HP	HORSEPOWER
HPS	HIGH PRESSURE SODIUM
IN. or "	INCHES
I/G	OSOLATED GROUND
IDF	INTERMEDIATE DISTRIBUTION FRAME
JBOX	JUNCTION BOX
K	DEGREE KELVIN
KCMIL	THOUSAND CIRCULAR MILS
KVA	KILOVOLT AMPERES
KW	KILOWATT
KWH	KILOWATT HOUR
LCL	LONG CONTINUOUS LOAD
L.F.	LINEAR FEET
LTG, LTS	LIGHTING
LPS	LOW PRESSURE SODIUM
MAX.	MAXIMUM
MDF	MAIN DISTRIBUTION FRAME
MOCP	MAXIMUM OVERCURRENT PROTECTION
MCB	MAIN CIRCUIT BREAKER
MLO	MAIN LUGS ONLY
M.C.	MECHANICAL CONTRACTOR
M	METER
M/M	METER MAIN
MV	MERCURY VAPOR
MH	METAL HALIDE
MIN.	MINIMUM
MCA	MINIMUM CIRCUIT AMPS
MCC	MOTOR CONTROL CENTER
MCM	THOUSAND CIRCULAR MILS
MCP	MOTOR CIRCUIT PROTECTOR
MFR.	MANUFACTURER
MTD	MOUNTED
MW	MICROWAVE
(N)	NEW
NATS	NON AUTOMATIC DISCONNECT
NEC	NATIONAL ELECTRICAL CODE
NEMA	NATIONAL ELECTRICAL MANUFACTURERS' ASSOCIATION
NC	NORMALLY CLOSED
NO	NORMALLY OPENED
NF	NON-FUSED
NIC	NOT IN CONTRACT
N.T.S.	NOT TO SCALE
NL	NIGHT LIGHT
NO. or #	NUMBER
OFCI	OWNER FURNISHED, CONTRACTOR INSTALLED
%Z	PERCENT IMPEDANCE
PH. or ~	PHASE
PC	PHOTOCELL
P.C.	PLUMBING CONTRACTOR
P	POWER
PVC	POLY VINYL CHLORIDE
PDU	POWER DISTRIBUTION UNIT
PRIMARY	OVER 600 VOLTS
PROVIDE	FURNISH, INSTALL AND CONNECT
PT	POTENTIAL TRANSFORMER
PA	PUBLIC ADDRESS
REC, RECEPT	RECEPTACLE
REF	REFRIGERATOR
RGS	RIGID GALVANIZED STEEL
RMS	ROOT MEAN SQUARE
SCC	SHORT CIRCUIT CURRENT
SCS	STRUCTURED CABLING SYSTEM
SFD	SMOKE FIRE DAMPER
SECONDARY	600 VOLTS AND LESS
SMACNA	SHEET METAL & AIR COND. CONTRACTORS' NATIONAL ASSOCIATION
SQ	SQUARE
TC	TIMECLOCK
TEL/DATA	TELEPHONE AND DATA
TV	TELEVISION
T.V.S.S.	TRANSIENT VOLTAGE SURGE SUPPRESSION
TYP	TYPICAL
U.G.P.S.	UNDERGROUND PULL SECTION
U.O.N.	UNLESS OTHERWISE NOTED
U.P.S.	UNINTERRUPTABLE POWER SYSTEM
VAV	VARIABLE AIR VOLUME
V	VOLTS
VA	VOLT AMPERES
VD	VOLTAGE DROP
WP	WEATHERPROOF
W	WIRE
XFMR	TRANSFORMER
XX	EXISTING EQUIP. TO BE DEMO'D

FLOOR BOX / SPECIALTY WALL BOX SYMBOLS

SINGLE SERVICE IN FLOOR BOX. PROVIDE DEVICES PER PLAN. SEE SPECIFICATIONS FOR MORE INFORMATION.

TWO SERVICE IN FLOOR BOX. PROVIDE DEVICES PER PLAN. SEE SPECIFICATIONS FOR MORE INFORMATION.

THREE SERVICE IN FLOOR BOX. PROVIDE DEVICES PER PLAN. SEE SPECIFICATIONS FOR MORE INFORMATION.

FOUR SERVICE IN FLOOR BOX. PROVIDE DEVICES PER PLAN. SEE SPECIFICATIONS FOR MORE INFORMATION.

SIX SERVICE IN FLOOR BOX. PROVIDE DEVICES PER PLAN. SEE SPECIFICATIONS FOR MORE INFORMATION.

ANNOTATIONS

AC-2 — MECHANICAL EQUIPMENT CALLOUT, "AC" INDICATES UNIT TYPE AND "2" INDICATES UNIT NUMBER. REFER TO MECHANICAL DRAWINGS FOR EXACT LOCATION AND ELECTRICAL REQUIREMENTS.

3 / E-1 — DETAIL CALLOUT, "3" INDICATES DETAIL NUMBER "E-1" INDICATES SHEET NUMBER.

XXXXXXXX — FEEDER SIZE DESIGNATION

XXX-X — LIGHTING FIXTURE DESIGNATION

XXX — KEYNOTE REFERENCE, REFER TO NOTES ON SHEETS, OR AS DIRECTED

1 — REVISION REFERENCE

WYE CONFIGURATION

GROUND

DELTA CONFIGURATION

BRANCH CIRCUIT SYMBOLS

A-1,3,5 — HOME RUN TO PANEL. LETTER DESIGNATES PANEL, NUMBERS INDICATE CIRCUITS. PROVIDE DEDICATED NEUTRAL WIRE FOR EACH 'HOT' CIRCUIT IN CONDUIT RUN, #12 AWG MINIMUM UNLESS OTHERWISE NOTED.

CONCEALED CONDUIT OR BRANCH CIRCUIT UNLESS OTHERWISE NOTED. 1/2" CONDUIT MINIMUM, (2) #12 AWG CONDUCTORS MINIMUM

CONCEALED CONDUIT OR BRANCH CIRCUIT ROUTED IN FLOOR SLAB OR CONCRETE. COORDINATE INSTALLATION WITH GENERAL CONTRACTOR AND SUPPORT AS REQUIRED. 1/2" CONDUIT (2) #12 AWG CONDUCTORS MINIMUM.

CONDUIT OR BRANCH CIRCUIT CONCEALED BELOW GRADE, 3/4" CONDUIT MINIMUM WITH (2) 12 AWG CONDUCTORS MINIMUM AND A CODE SIZED EQUIPMENT GROUND.

SURFACE-MOUNTED CONDUIT OR BRANCH CIRCUIT UNLESS OTHERWISE NOTED. 1/2" CONDUIT MINIMUM, (2) #12 AWG CONDUCTORS MINIMUM. CONDUIT SHALL BE PAINT TO MATCH ADJACENT SURFACE. COORDINATE COLOR WITH ARCHITECT/INTERIORS.

CONDUIT STUB OUT, CAP, MARK AND RECORD ON AS-BUILT DRAWINGS.

CONDUIT CONTINUATION.

FLEXIBLE CONNECTION AS REQUIRED. NUMBER OF CONDUCTORS AS REQUIRED. VERIFY CONNECTION REQUIREMENTS WITH MANUFACTURER PRIOR TO ROUGH-IN.

CONDUIT/ BRANCH CIRCUIT/FEEDER CONTINUATION DOWN WALL TO FLOOR BELOW.

CONDUIT/ BRANCH CIRCUIT/FEEDER CONTINUATION UP WALL TO FLOOR ABOVE.

X — EXISTING FEEDER, CONDUIT, WIRE TO BE DEMOLISHED.

LV — LOW VOLTAGE DUCTBANK BELOW GRADE.

P — POWER DUCTBANK BELOW GRADE, SEE FEEDER TAG(s) FOR QUANTITY AND SIZE OF CONDUIT AND WIRE.

12KV — MEDIUM - HIGH VOLTAGE DUCTBANK BELOW GRADE, WITH VOLTAGE INDICATED. SEE FEEDER TAG(s) FOR QUANTITY AND SIZE OF CONDUIT AND WIRE.

FLUSH MOUNTED, LOCKABLE TERMINAL CABINET WITH TERMINAL STRIPS AS REQUIRED.

SURFACE MOUNTED, LOCKABLE TERMINAL CABINET WITH TERMINAL STRIPS AS REQUIRED.

TELEPHONE TERMINAL BACKBOARD SIZED AS NOTED, REFER TO SYSTEM GROUND DETAIL.

LIGHTING SYMBOLS

DECORATIVE PENDANT

STRIP LIGHT (B.O.H.)

DECORATIVE SURFACE MOUNTED LIGHT.

SURFACE MOUNTED WRAPAROUND.

RECESSED LENSED TROFFER

RECESSED ARCHITECTURAL TROFFER

RECESSED LINEAR OR PERIMETER WALLSLOT.

PENDANT MOUNTED LINEAR.

RECESSED LINEAR WALLWASH.

RECESSED DOWNLIGHT.

RECESSED WALLWASHER.

RECESSED ADJUSTABLE ACCENT LIGHT.

SURFACE MOUNTED DOWNLIGHT.

WALL MOUNTED FIXTURE.

TRACK LIGHT.

SURFACE MOUNTED ADJUSTABLE LINEAR WALLWASHER.

CONCEALED LINEAR LIGHT STRIP.

RECESSED MULTI-LAMP ADJUSTABLE DOWNLIGHT.

WALL STEP LIGHT.

BOLLARD LIGHT.

ABOVE-GRADE MOUNTED ADJUSTABLE ACCENT LIGHT.

POLE MOUNTED LIGHT.

EXIT SIGN.

SURFACE MOUNTED EMERGENCY BATTERY PACK.

"EM" SHADED OR HALF-SHADED CONNECTION POINT INDICATES FIXUTRE ON EMERGENCY POWER.

LIGHTING CONTROLS

xx ab — WALL MOUNTED OCCUPANCY SENSOR. MOUNTING HEIGHT PER ADA - UON OR REQUIRED. "xx" INDICATES THE FOLLOWING:
- IC: INFRARED OCCUPANCY SENSOR
- UO: ULTRASONIC OCCUPANCY SENSOR
- DO: DUAL TECHNOLOGY OCCUPANCY SENSOR.
- P: PHOTOCELL
- OP: COMBINATION PHOTOCELL AND DUAL TECHNOLOGY OCCUPANCY SENSOR

LETTERS "ab" INDICATE ZONES CONTROLLED.

xx ab — CEILING MOUNTED SENSOR. PROVIDE WITH POWER PACK AND RELAYS FOR PLUG LOAD AND HVAC CONTROL. LETTERS "ab" INDICATE ZONES CONTROLLED. "xx" INDICATES THE FOLLOWING:
- OS: DUAL TECHNOLOGY OCCUPANCY SENSOR
- P: PHOTOCELL
- OP: COMBINATION PHOTOCELL AND DUAL TECHNOLOGY OCCUPANCY SENSOR.

o ab — WALL MOUNTED COMBINATION OCCUPANCY SENSOR AND DIMMER SWITCH. MOUNTING HEIGHT PER ADA - UON OR REQUIRED. LETTERS "ab" INDICATE ZONES CONTROLLED.

v ab — WALL MOUNTED COMBINATION VACANCY SENSOR AND DIMMER SWITCH, MOUNTING HEIGHT PER ADA - UON OR REQUIRED. LETTERS "ab" INDICATES ZONES CONTROLLED. BOTH SWITCH LEGS TO BE CONFIGURED IN A "MANUAL ON" CONFIGURATION.

SZ — LOW VOLTAGE MANUAL ON/OFF AND SINGLE ZONE DIMMING CONTROL.

MS - # ab — LOW VOLTAGE MANUAL ON/OFF, DIMMING AND MULTI BUTTON SCENE SELECT CONTROL STATION. "#" DENOTES NUMBER OF SCENE. LETTERS "ab" INDICATE ZONES CONTROLLED.

MZ - # ab — LOW VOLTAGE MANUAL ON/OFF, DIMMING AND MULTI BUTTON ZONE SELECT CONTROL STATION. "#" DENOTES NUMBER OF ZONES. LETTERS "ab" INDICATE ZONES CONTROLLED.

S_K — SINGLE POLE SWITCH, MOUNTING HEIGHT PER ADA. SUBSCRIPT "K" INDICATES KEY OPERATED SWITCH.

G — MANUAL ON/OFF, DIMMING AND GRAPHIC SCENE SELECT CONTROL STATION.

POWER SYMBOLS

DUPLEX RECEPTACLE - MOUNTING HEIGHT PER ADA DETAIL 19/E7.01 OR AS NOTED. "C" INDICATES CONTROLLED RECEPTACLE, MUST BE WITHIN 6'-0" OF UNCONTROLLED RECEPTACLE PER TITLE 24 REQUIREMENTS.

DOUBLE DUPLEX RECEPTACLE, MOUNTING HEIGHT PER ADA DETAIL 19/E7.01 OR AS NOTED.

DUPLEX, GFCI RECEPTACLE, MOUNTING HEIGHT PER ADA DETAIL 19/E7.01 OR AS NOTED. WP INDICATES WEATHERPROOF, REFER TO THE GENERAL PRODUCT SPECIFICATIONS.

DOUBLE DUPLEX, GFCI RECEPTACLE, MOUNTING HEIGHT PER ADA DETAIL 19/E7.01 OR AS NOTED. WP INDICATES WEATHERPROOF, REFER TO THE GENERAL PRODUCT SPECIFICATIONS.

DEDICATED 20A DUPLEX RECEPTACLE, MOUNTING HEIGHT PER ADA DETAIL 19/E7.01 OR AS NOTED.

DUPLEX RECEPTACLE WITH USB CONNECTORS - MOUNTING HEIGHT PER ADA DETAIL 19/E7.01 OR AS NOTED.

DOUBLE DUPLEX RECEPTACLE WITH USB CONNECTORS, MOUNTING HEIGHT PER ADA DETAIL 19/E7.01 OR AS NOTED.

EMERGENCY DUPLEX RECEPTACLE - MOUNTING HEIGHT PER ADA DETAIL 19/E7.01 OR AS NOTED.
NOTE: TICK MARKS SHOWN ON ANY DEVICE REPRESENTS RECEPTACLE CONNECTED TO EMERGENCY CIRCUIT (RED DEVICE) TYPICAL FOR ANY DEVICE IN LEGEND.

SIMPLEX RECEPTACLE, MOUNTING HEIGHT PER ADA DETAIL 19/E7.01 OR AS NOTED.

SPECIAL RECEPTACLE, MOUNTING HEIGHT PER ADA DETAIL 19/E7.01 OR AS NOTED. REFER TO PLAN NOTES.

DUPLEX RECEPTACLE FLUSH IN CEILING - MOUNT FLUSH IN FLOOR WHEN INDICATED IN A FLOOR BOX SYMBOL.

DOUBLE DUPLEX RECEPTACLE FLUSH IN CEILING - MOUNT FLUSH IN FLOOR WHEN INDICATED IN A FLOOR BOX SYMBOL.

SIMPLEX RECEPTACLE FLUSH IN CEILING - MOUNT FLUSH IN FLOOR WHEN INDICATED IN A FLOOR BOX SYMBOL.

SPECIAL RECEPTACLE FLUSH IN CEILING - MOUNT FLUSH IN FLOOR WHEN INDICATED IN A FLOOR BOX SYMBOL.

DUPLEX RECEPTACLE MOUNTED ABOVE COUNTER, MOUNTING HEIGHT PER ADA DETAIL 19/E7.01 - UON OR REQUIRED.

DOUBLE DUPLEX RECEPTACLE MOUNTED ABOVE COUNTER, MOUNTING HEIGHT PER ADA DETAIL 19/E7.01 - UON OR REQUIRED.

DUPLEX, GFCI RECEPTACLE MOUNTED ABOVE COUNTER, MOUNTING HEIGHT PER ADA DETAIL 19/E7.01 - UON OR REQUIRED. WP INDICATES WEATHERPROOF, REFER TO THE GENERAL PRODUCT SPECIFICATIONS.

DOUBLE DUPLEX, GFCI RECEPTACLE MOUNTED ABOVE COUNTER, MOUNTING HEIGHT PER ADA DETAIL 19/E7.01 - UON OR REQUIRED. WP INDICATES WEATHERPROOF, REFER TO THE GENERAL PRODUCT SPECIFICATIONS.

SIMPLEX RECEPTACLE MOUNTED ABOVE COUNTER, MOUNTING HEIGHT PER ADA DETAIL 19/E7.01 - UON OR REQUIRED.

SPECIAL RECEPTACLE MOUNTED ABOVE COUNTER, MOUNTING HEIGHT PER ADA DETAIL 19/E7.01 - UON OR REQUIRED.

WALL MOUNTED JUNCTION BOX, MOUNTING HEIGHT AS NOTED. 4S/DP MINIMUM OR AS REQUIRED BY N.E.C..

JUNCTION BOX, MOUNTED IN ACCESSIBLE CEILING FOR APPLICATION DENOTED ON PLAN. 4S/DP MINIMUM OR AS REQUIRED BY N.E.C..

SURFACE MOUNTED MULTI-OUTLET ASSEMBLY. REFER TO GENERAL PRODUCT SPECIFICATIONS. PROVIDE ALL COMPONENTS NECESSARY FOR A COMPLETE INSTALLATION.

T — THERMOSTAT OUTLET BOX, PROVIDE 1/2"C.O. TO RESPECTIVE MECHANICAL UNIT.

3 — EXHAUST FAN, OR MOTOR LOAD. REFER TO MECHANICAL, PLUMBING OR KITCHEN DRAWINGS FOR SPECIFIC LOAD REQUIREMENTS OR AS NOTED.

FLUSH MOUNTED ELECTRICAL PANELBOARD OR LOAD CENTER. REFER TO PANEL SCHEDULE.

SURFACE MOUNTED ELECTRICAL PANELBOARD OR LOAD CENTER. REFER TO PANEL SCHEDULE.

DISTRIBUTION SWITCHBOARD. REFER TO SINGLE LINE DIAGRAM.

T — TRANSFORMER, REFER TO SINGLE LINE DIAGRAM.

F — FUSED DISCONNECT SWITCH, HP RATED, OR COMBINATION MOTOR STARTER/DISCONNECT SWITCH WITH FUSES PER EQUIPMENT MANUFACTURER AND WEATHERPROOF AS REQUIRED. PROVIDE FINAL CONNECTION TO UNIT EQUIPMENT. SEE MOTORIZED EQUIPMENT SCHEDULE FOR DISCONNECT AND STARTER SIZES.

MOTOR STARTER COMBINATION SWITCH WITH HOA SELECTOR SWITCH, ON "RUNNING LIGHT" RESET AND OVERLOAD PROTECTION.

L — NON-FUSED DISCONNECT SWITCH, HP RATED AND WEATHERPROOF AS REQUIRED. PROVIDE FINAL CONNECTION TO UNIT EQUIPMENT. SEE MOTORIZED EQUIPMENT SCHEDULE FOR DISCONNECT SIZES.

M CT. — UTILITY COMPANY METER. PROVIDE "CT's" AND "PT's" AS REQUIRED, REFER TO SINGLE LINE DIAGRAM.

1 / 150AF / 150AT / 3P — CIRCUIT BREAKER, LINE 1 REPRESENTS FRAME SIZE/RATING; LINE 2 REPRESENTS TRIP SIZE/RATING; LINE 3 REPRESENTS NUMBER OF POLES AND LINE 4 REPRESENTS MISCELLANEOUS BREAKER INFO. (SEE BELOW):
SHUNT = PROVIDE SHUNT TRIP MECHANISM.
HACR = PROVIDE HACR-RATED BREAKER.
GFP = GROUND FAULT PROTECTION
CLCB = CURRENT LIMITING CIRCUIT BREAKER
SS = PROVIDE SOLID STATE CIRCUIT BREAKER

60AS / 3P / 50AF / CLASS J — FUSIBLE SWITCH: LINE 1 REPRESENTS SWITCH SIZE/RATING; LINE 2 REPRESENTS NUMBER OF POLES; LINE 3 REPRESENTS FUSE SIZE/RATING; LINE 4 REPRESENTS FUSE TYPE; LINE 5 REPRESENTS MISCELLANEOUS FUSE INFO. (SEE BELOW):
SHUNT= PROVIDE SHUNT TRIP MECHANISM.
GFP = GROUND FAULT PROTECTION
CLF = CURRENT LIMITING FUSE

GROUND CONNECTION, SIZE AS INDICATED OR AS REQUIRED.

T — LOW VOLTAGE TRANSFORMER

PB OR P — PULLBOX, SIZED PER N.E.C. OR AS NOTED.

Q — RECESSED COMBINATION POWER. OUTLET FOR IN FLOOR BOX PER PLAN FOR FLEXIBLE CONNECTION TO FURNITURE SYSTEM. VERIFY CONNECTION REQUIREMENTS WITH MANUFACTURER PRIOR TO ROUGH-IN - MOUNT FLUSH IN FLOOR WHEN INDICATED IN A FLOOR BOX SYMBOL.

Q — POWER OUTLET OUTLET, MOUNTING HEIGHT PER ADA DEVICE MOUNTING REQUIREMENTS. FOR FLEXIBLE CONNECTION TO FURNITURE SYSTEM PROVIDE THE FOLLOWING:

- IN A NON-RATED INSULATED WALL, OR NON-RATED UNINSULATED WALL, PROVIDE A 2-GANG MUD RING OR CADDY #RBS SERIES BOX MOUNTING BRACKET (EQUAL BY B-LINE OR RAYCO) WITH (2) 1-1/4"C.O. WITH PULL STRING TO ACCESSIBLE CEILING. PROVIDE 1-1/4" BUSHINGS AT CONDUIT ENDS. REFER TO ARCHITECTURAL PLANS FOR WALL CONSTRUCTION/TYPE AND CEILING CONDITIONS.

- IN A RATED WALL, PROVIDE (1) 4S/DP BOX WITH (2) 1-1/4"C.O. AND (1) 4S/DP BOX WITH (1) 1-¡"C.O. WITH PULL STRINGS IN EACH CONDUIT TO ACCESSIBLE CEILING. PROVIDE 1-1/4" BUSHINGS AT CONDUIT ENDS. UTILIZE CADDY #RBS SERIES BOX MOUNTING BRACKET TO MAINTAIN BOX ALIGNMENT. (EQUAL BY B-LINE OR RAYCO)UTILIZE FIRESTOPPING SYSTEM PADS RATED FOR USE ON THE INSIDE OR OUTSIDE OF THE BOX (STI OR EQUAL.) AS REQUIRED TO MAINTAIN RATING OF WALL OR MEMBRANE. REFER TO ARCHITECTURAL PLANS FOR WALL CONSTRUCTION/TYPE AND CEILING CONDITIONS.

GROUND BUS BAR.

IDENTIFICATION STAMP
DIV. OF THE STATE ARCHITECT
APP: 02-119490 INC:
REVIEWED FOR
SS ☑ FLS ☑ ACS ☑
DATE: 09/13/2022

LPA
ARCHITECTURE ENGINEERING INTERIORS
LANDSCAPE ARCHITECTURE PLANNING

916-287-2400 Office
916-287-2401 Fax
LPADesignStudios.com
431 I Street,
Suite 107
Sacramento, California 95814

REGISTERED PROFESSIONAL ENGINEER
STEPHEN BARR
E-17415
9/30/23
ELECTRICAL
STATE OF CALIFORNIA

This document and all other project documents, ideas, aesthetics and designs incorporated therein are instruments of service. All project documents are copyright protected, are the property of LPA, Inc. (LPA) and cannot be lawfully used in whole or in part for any project or purpose except as set forth in the contractual agreement between LPA and its Client. The unauthorized disclosure and/or use of the project documents (including the creation of derivative works), may give rise to liability for copyright infringement, unlawful disclosure, use or misappropriation of property rights held by LPA. The unauthorized use of the project documents will give rise to the recovery of monetary losses and damages including attorney fees and costs for which the unauthorized user will be held liable.
Project documents describe the design intent of the work and are not a representation of as-built or existing conditions. LPA is not responsible for any discrepancies between the project documents and the existing conditions.

© LPA, Inc.

DAVIS SENIOR HIGH SCHOOL
NEW AQUATICS CENTER
315 W 14TH ST., DAVIS, CA 95616

Developed for
DAVIS JOINT UNIFIED SCHOOL DISTRICT

Revision	Date

Submittal	Date
50% DESIGN DEVELOPMENT	06/15/2021
100% DD SUBMITTAL	07/26/2021
50% CD REVIEW	10/08/2021
100% CD DSA SUBMITTAL	10/22/2021
DSA SUBMITTAL	03/24/2022

Job Number	1904413
Date Published	03/24/2022
Checked By	LPA
Scale	

ELECTRICAL LEAD SHEET

E0.01

LIGHTING GENERAL NOTES

1. REFER TO ARCHITECTURAL PLANS FOR EXACT LOCATION & ELEVATION OF ALL LIGHTING FIXTURES AND ALL DEVICES. ALL WALL-MOUNTED DEVICE HEIGHTS SHALL BE VERIFIED WITH THE ARCHITECT PRIOR TO ROUGH-IN. IF ANY WALL MOUNTED FIXTURES ARE PLACED WITHOUT VERIFICATION FROM THE ARCHITECT, CONTRACTOR SHALL RELOCATE FIXTURE TO APPROVED LOCATION AT NO ADDITIONAL COST.
2. VERIFY EXACT CEILING CONSTRUCTION WITH ARCHITECTURAL REFLECTED CEILING PLAN AND PROVIDE LIGHTING FIXTURES WITH ALL NECESSARY MOUNTING HARDWARE.
3. ALL RECESSED FIXTURES SHALL BE PROVIDED WITH ALL REQUIRED STRUCTURAL SUPPORTS AS REQUIRED BY THE CURRENTLY ADOPTED ISSUE OF THE UNIFORM BUILDING CODE, AS WELL AS ANY LOCAL CODES.
4. ALL COVE MOUNTED FIXTURES SHALL EXTEND THE FULL LENGTH OF THE COVE. CONTRACTOR TO FIELD MEASURE COVE LENGTH AND ORDER QUANTITY OF FIXTURES AS REQUIRED.
5. ALL DIMMING BRANCH CIRCUITS SHALL BE PROVIDED WITH A DEDICATED NEUTRAL CONDUCTOR FOR EACH ZONE/CHANNEL.
6. REFER TO ARCHITECTURAL REFLECTED CEILING PLANS FOR EXIT SIGN CHEVRONS AND NUMBER OF FACES PER EXIT SIGN. ANY DISCREPANCIES BETWEEN EXIT SIGNS SHOWN ON THE ELECTRICAL AND ARCHITECTURAL PLANS SHALL BE BROUGHT TO THE ATTENTION OF THE ARCHITECT PRIOR TO ORDERING EXIT SIGNS.
7. WHEN EXPOSED CEILINGS OR OPEN GRID CONDITIONS OCCUR, THE CONTRACTOR WILL NEED TO PROVIDE THE FOLLOWING ITEMS:
   - A. ALL BRANCH CIRCUITS SHALL BE IN EMT.
   - B. ALL BRANCH CIRCUITS SHALL BE ROUTED NEATLY TRAINED AND IN PARALLEL TO STRUCTURES OR DUCT WORK. THE TERM "TRAINED" MEANS ALL PARALLEL CONDUITS SHALL MAINTAIN THE SAME SPATIAL RELATIONSHIP WITH EACH OTHER FOR ENTIRE RUN TO INCLUDE RADIUS BENDS AND SWEEPS.
   - C. VISUALLY OBJECTIONABLE BRANCH CIRCUITS WILL BE REROUTED AT THE REQUEST OF THE ARCHITECT AT NO ADDITIONAL COST.
   - D. SHOP DRAWINGS SHOWING LOCATION AND PLACEMENT OF ALL CONDUITS.
8. RECESSED FIXTURES LOCATED IN A FIRE-RATED CEILING OR WALL SHALL BE PROVIDED WITH A 5-SIDED RATED ENCLOSURE SO CONSTRUCTED AS TO ALLOW CODE AND MANUFACTURER-REQUIRED CLEARANCES BETWEEN THE FIXTURE AND THE ENCLOSURE.
9. REFER TO GENERAL POWER PLAN NOTES AND COMMUNICATIONS PATHWAYS GENERAL NOTES FOR ADDITIONAL REQUIREMENTS WHEN POWER AND/OR DATA DEVICES ARE SHOWN ON THIS PLAN.
10. CONTRACTOR TO INCLUDE AN ALLOWANCE TO CORE AND SEAL PENETRATIONS THROUGH STRUCTURAL CONCRETE WALLS. COORDINATE LOCATIONS AND REQUIREMENTS WITH ARCHITECTURAL AND STRUCTURAL DRAWINGS.
11. COORDINATE ALL PENETRATIONS WITH STRUCTURAL PLANS AND DETAILS. NO PENETRATIONS ARE PERMITTED UNLESS SPECIFICALLY NOTED ON STRUCTURAL DRAWINGS.

POWER GENERAL NOTES

1. ALL RECEPTACLES ON COMMON WALLS SHALL BE SEPARATE BOXES AND OFFSET 24" MINIMUM.
2. ALL PENETRATIONS THROUGH FIRE RATED WALLS SHALL BE PROTECTED FROM THE SPREAD OF FIRE WITH AN APPROVED FIRESTOP SYSTEM EQUAL OR GREATER THAN THE FIRE RATING OF THE WALL.
3. COORDINATE ALL MOUNTING DIMENSIONS FOR ELECTRICAL DEVICES AND SWITCHES WITH ARCHITECTURAL INTERIOR ELEVATIONS PRIOR TO ROUGH-IN.
4. ALL FURNITURE FEED LOCATIONS TO BE VERIFIED WITH ARCHITECT AND FURNITURE VENDOR PRIOR TO ROUGH IN..
5. ALL FURNITURE WHIPS SHALL BE TRIMMED TO REDUCE EXCESS WHIP LENGTH
6. WHEN EXPOSED CEILINGS OR OPEN GRID CONDITIONS OCCUR, THE CONTRACTOR WILL NEED TO PROVIDE THE FOLLOWING ITEMS:
   - A. ALL BRANCH CIRCUITS SHALL BE IN EMT.
   - B. ALL BRANCH CIRCUITS SHALL BE ROUTED NEATLY AND IN PARALLEL TO STRUCTURES OR DUCT WORK.
   - C. VISUALLY OBJECTIONABLE BRANCH CIRCUITS WILL BE REROUTED AT THE REQUEST OF THE ARCHITECT AT NO ADDITIONAL COST.
7. EXPOSED CABLE/CONDUCTORS INSTALLED IN A PLENUM SPACE SHALL CONFORM TO CEC WHERE ADOPTED, ARTICLE 300.22(C.
8. PROVIDE G.F.C.I. TYPE RECEPTACLE(S) WITHIN 6 FEET OF ANY SINK.
9. CONTRACTOR TO INCLUDE AN ALLOWANCE TO CORE AND SEAL PENETRATIONS THROUGH STRUCTURAL CONCRETE WALLS. COORDINATE LOCATIONS AND REQUIREMENTS WITH ARCHITECTURAL AND STRUCTURAL DRAWINGS.
10. COORDINATE ALL PENETRATIONS WITH STRUCTURAL PLANS AND DETAILS. NO PENETRATIONS ARE PERMITTED UNLESS SPECIFICALLY NOTED ON STRUCTURAL DRAWINGS.
11. COORDINATE ALL KITCHEN CONDUIT AND EQUIPMENT ROUGH-IN ON KITCHEN DRAWINGS

ROOF GENERAL NOTES

1. ELECTRICAL CONTRACTOR SHALL REFER TO MECHANICAL/PLUMBING AND ARCHITECTURAL DRAWINGS FOR EXACT LOCATIONS AND CHARACTERISTICS OF ALL EQUIPMENT LISTED IN SCHEDULE. ANY MODIFICATIONS AND/OR ADDITIONAL WORK NECESSARY SHALL BE INCLUDED IN THE BASE BID.
2. ELECTRICAL CONTRACTOR SHALL VERIFY THE EXACT LOCATION OF ALL CONNECTION POINTS WITH THE EQUIPMENT INSTALLER PRIOR TO ROUGH-IN.
3. ELECTRICAL CONTRACTOR SHALL PROVIDE LOCAL REMOTE DISCONNECTING MEANS FOR ALL ELECTRIC HEATING EQUIPMENT IF REQUIRED BY THE LOCAL ELECTRICAL CODE.
4. ELECTRICAL CONTRACTOR SHALL COORDINATE THE ROUTING OF CONDUIT/WIRING TO ROOF-MOUNTED EQUIPMENT WITH EQUIPMENT INSTALLER PRIOR TO ROUGH-IN. WHERE ROOF-MOUNTED EQUIPMENT IS MANUFACTURED TO BE FED FROM WITHIN MECHANICAL CURB ASSEMBLY - SEPARATE ROOF PENETRATIONS FOR WIRING CONNECTIONS SHALL NOT BE PERMITTED. ALL WIRING SHALL BE BELOW THE ROOF IN AN ACCESSIBLE CEILING SPACE LOCATION.
5. ALL ROOF MOUNTED EQUIPMENT SHALL BE NEMA 3R RATED

SITE UTILITY PLAN GENERAL NOTES

THESE NOTES ESTABLISH MINIMUM QUALITY LEVELS AND COORDINATION REQUIREMENTS. RESPECTIVE UTILITY COMPANY PLANS AND REQUIREMENTS TAKE PRECEDENCE OVER THESE NOTES WITH REGARD TO RESPECTIVE UTILITY COMPANY CONDUIT AND UNDERGROUND STRUCTURE SYSTEMS.

1. CALL UNDERGROUND SERVICE ALERT (USA) AT 1 (800) 422-4133 OR APPLICABLE STATE AND LOCAL DIG SAFE OR UNDERGROUND ALERT HOTLINES PRIOR TO CONSTRUCTION START.
2. COORDINATE ALL UNDERGROUND STRUCTURES AND CONDUIT ROUTING WITH LANDSCAPE ARCHITECT PRIOR TO ROUGH-IN TO ENSURE THAT SUCH ITEMS ARE NOT PLACED IN CRITICAL LANDSCAPE PLANTING/HARDSCAPE AREAS.
3. VAULTS, MAINTENANCE HOLES (MH's) AND CONDUITS SHALL MAINTAIN A MINIMUM COVER OF 24" BELOW FINAL SURFACE AT ALL CONDITIONS. INCLUDE ALL COSTS IN BASE BID TO MEET UTILITY COMPANY REQUIREMENTS WHICH MAY REQUIRE GREATER MINIMUM CONDUIT DEPTHS.
4. VAULTS, MH's AND PULLBOXES (PB's) SHALL BE EQUIPPED WITH KNOCKOUT PANELS OR PRE-CAST INDIVIDUAL CONDUIT OPENINGS. CONDUITS SHALL ONLY ENTER AND EXIT ON END/SHORT WALLS. CONDUITS MAY NOT ENTER AND EXIT ON SIDE/LONG WALLS, CEILINGS OR FLOORS UNLESS OTHERWISE NOTED.
5. CUT DUCTS FLUSH WITH INTERIOR VAULT/MH/PB WALL.
6. GROUT AROUND DUCT ENTRANCES ON VAULT/MH/PB WALLS.
7. SLURRY BACKFILL AROUND DUCTS WITHIN 5 FEET OF VAULT/MH/PB TO PREVENT SHEARING.
8. CONDUITS PASSING UNDER THE BUILDING PERIMETER SHALL BE ENCASED IN LIGHTWEIGHT CONCRETE OR WATER-IMPERVIOUS CLAY TO PREVENT WATER INFILTRATION. SEE ELECTRICAL SPECIFICATIONS FOR ADDITIONAL INFORMATION.
9. CONDUIT BEND RADIUS FOR BUILDING ENTRANCES AND AT POLES SHALL BE A MINIMUM OF 24" FOR CONDUITS WITH LESS THAN 2" INTERNAL DIAMETER AND A MINIMUM OF 48" FOR CONDUITS WITH MORE THAN 2" INTERNAL DIAMETER.
10. PREFERRED CONDUIT SWEEP RADIUS BETWEEN VAULTS IS 25 FEET. UNDER NO CIRCUMSTANCES SHALL THE CONDUIT SWEEP RADIUS BE LESS THAN 12.5 FEET. MAXIMUM OF 90 DEGREES PER SWEEP AND LIMITED TO NO MORE THAN (2) 90 DEGREE WEEPS BETWEEN VAULTS.
11. VAULTS/MH's/PB's ARE TO BE EQUIPPED WITH RACKING, GROUNDING LUGS, AND BOLT-DOWN LIDS UNLESS OTHERWISE NOTED.
12. VAULTS AND MH's TO BE EQUIPPED WITH ROUND COVERS, EXTENSION RINGS AS REQUIRED, LADDERS AND (3) SEGMENTS OF 6 FOOT HIGH CABLE RACKING PER EACH LONG WALL.
13. LABEL ALL NON-UTILITY COMMUNICATION VAULT/MH/PB COVERS WITH "COMMUNICATIONS" UNLESS OTHERWISE NOTED ON PLANS.
14. COORDINATE FINAL VAULT/MH/PB OPENING HEIGHT WITH G.C. PRIOR TO ROUGH-IN TO ENSURE FINAL GRADE DOES NOT SLOPE INTO VAULT/MH/PB OPENING.
15. CONTRACTOR TO PROVIDE A MINIMUM OF 8" DEEP COMPACTED 1/2" DIAMETER GRAVEL, UNDER ALL VAULTS, MH's OR PB's TO ENSURE UNIFORM DISTRIBUTION OF SOIL PRESSURE ON THE FLOOR AND BE ABLE TO DISSIPATE WATER OUT OF THE VAULT, MH OR PB.
16. ALL VAULTS/MH's/PB's WITHOUT GROUNDING LUGS SHALL HAVE AN 8' x 3/4" COPPER GROUND ROD DRIVEN THRU THE FLOOR TO ALLOW GROUNDING OF ITEMS WITHIN.
17. ALL VAULTS/MH's/PB's SHALL BE PROVIDED WITH TRAFFIC RATED COVERS WHEN LOCATED IN PAVED AREAS UTILIZED FOR VEHICLE TRAFFIC.
18. IF THE WATER OR MOISTURE BARRIER ON OR NEAR THE FOUNDATION OF A BUILDING IS DISTURBED IN ANY MANNER BY EXCAVATION OR OTHER CONSTRUCTION WORK. THE MOISTURE BARRIER MUST BE REPAIRED FOLLOWING THE RECOMMENDATIONS OF THE MANUFACTURER OF THE ORIGINAL BARRIER PRODUCT.
19. THE CONTRACTOR SHALL INCLUDE IN BASE BID ALL COSTS TO COMPLY WITH ALL REQUIREMENTS FOR CONFINED SPACE ENTRY PER THE OSHA REQUIREMENTS 29 CFR-1910.146, 29 CFR-1910.268, ETC. DURING ANY CONFINED SPACE ENTRY.
20. ANY DUCTS LEAVING A VAULT, MH OR PB ROUTED INTO A FACILITY SHALL BE PLUGGED AT EACH END USING REMOVEABLE MECHANICAL PLUGS DESIGNED TO PREVENT WATER AND GAS FROM ENTERING THE FACILITY.
21. SEE ELECTRICAL SPECIFICATIONS AND PLAN DETAILS FOR ADDITIONAL REQUIREMENTS REGARDING UNDERGROUND CONDUITS AND IN-GRADE VAULT/MH/PB/JUNCTION BOXES.
22. INSTALL MULE TAPE OR 3/8" PULL ROPE AND TRUE-TAPE IN EACH UTILITY CONDUIT.

DEMOLITION NOTES

1. THE ELECTRICAL DRAWINGS ARE DIAGRAMMATIC ONLY. DO NOT SCALE THE ELECTRICAL DRAWINGS TO DETERMINE THE LOCATION OF EQUIPMENT OR OUTLETS. SEE ARCHITECTURAL PLANS, WHERE PROVIDED ON PROJECT, FOR EXTENT OF DEMOLITION.
2. THE EXISTING CONDITIONS SHOWN ARE FROM AVAILABLE RECORD DRAWINGS AND SHOWN FOR REFERENCE ONLY. CONTRACTOR SHALL VERIFY ACTUAL EXISTING CONDITIONS AT SITE PRIOR TO SUBMITTING BID. ALL DEMOLITION, ALTERATION, EXTENSION, RELOCATION, REHABILITATION WORK SHALL BE INCLUDED IN CONTRACT. NO ADDITIONAL ALLOWANCE OR CHANGE ORDERS WILL BE ACCEPTED.
3. CONTRACTOR IS RESPONSIBLE TO RELOCATE OR REMOVE FROM WALLS, CEILINGS, FLOOR SPACES, ETC. ANY EXISTING CONDUITS, WIRES, BOXES, FITTINGS, FIXTURES OR OTHER ELECTRICAL EQUIPMENT WHICH INTERFERES WITH PLANNED REMODEL WORK. PROVIDE CIRCUIT CONTINUATION REQUIRED FOR ALL EXISTING OUTLETS, FIXTURES, EQUIPMENT, ETC. SCHEDULED TO REMAIN.
4. NOTIFY THE ENGINEER IMMEDIATELY WHEREVER EXISTING EQUIPMENT IS ENCOUNTERED WHICH MUST BE RELOCATED DUE TO THE NEW CONSTRUCTION, OR NOT INDICATED ON "AS-BUILT" DRAWINGS OR WAS BURIED UNDERGROUND OR EMBEDDED IN STRUCTURE WALLS.
5. CAREFULLY PROTECT ALL WALLS, TRIM, FLOORS, EQUIPMENT, UTILITY LINES AND MATERIALS. WHEN WORKING ON FINISHED SURFACES, LIMIT DAMAGE TO THE SMALLER AREA IF POSSIBLE AND RESTORE TO THE ORIGINAL CONDITION ALL SURFACES WHICH ARE DAMAGED BECAUSE OF THE INSTALLATION OF THIS WORK.
6. EQUIPMENT, MATERIALS AND SUPPLIES TEMPORARILY REMOVED FOR PROTECTION SHALL BE REPLACED IN ORIGINAL LOCATIONS. ANY MATERIALS DAMAGED SHALL BE REPLACED WITH NEW MATERIALS OF LIKE KIND AND QUALITY.
7. DEMOLITION WORK SHALL BE DONE IN A MANNER WHICH WILL NOT CAUSE UNNECESSARY INCONVENIENCE OR DANGER TO USERS OF THE PREMISES AND ADJACENT SITE, AND NOT INTERFERE WITH ITS OPERATION. ANY DEMOLITION WORK TO BE PERFORMED MUST BE PLANNED IN ADVANCE.
8. DO ALL DRILLING, CUTTING, ETC. REQUIRED TO DEMOLISH ELECTRICAL WORK AS INDICATED OR PROVIDE BLANK COVER PLATE ON ALL OUTLETS EXPOSED BY REMOVAL OF FIXTURE OF DEVICES.
9. RESEAL ALL PENETRATIONS OR OPENING THROUGH WALLS, CEILING, FLOORS, ETC., TO MAINTAIN THE RATING OF STRUCTURE.
10. CONTRACTOR SHALL VERIFY EXISTING CONDUIT/CONDUCTOR RUNS ON CIVIL DEMOLITION PLAN, SHEET C1.01. REUSE AS REQUIRED AND REMOVE ALL UNUSED CONDUIT/CONDUCTORS. REMOVE CONDUIT BACK TO SCOPE OF WORK LIMIT LINE. AT EACH END OF FEEDER, TAG AND LABEL CONDUIT. DOCUMENT DETAILED DIMENSIONS ON AS-BUILTS. REMOVE CONDUCTORS BACK TO SOURCE (VERIFY WITH OWNER). UNUSED CONDUIT IN INACCESSIBLE LOCATIONS (WALLS TO REMAIN) CAN BE ABANDONED IN PLACE.
11. CONTRACTOR SHALL FIELD VERIFY EXISTING CONDUIT/WIRING RUNS, REUSE AS REQUIRE AND REMOVED ALL UNUSED CONDUIT/WIRING. UNUSED CONDUIT IN INACCESSIBLE LOCATIONS (WALLS TO REMAIN) CAN BE ABANDONED IN PLACE. REMOVE UNUSED WIRING.
12. CONTRACTOR TO VERIFY CIRCUIT NUMBER AND LOADS FOR ALL EXISTING EQUIPMENT PRIOR TO INSTALLATION OF NEW OR RELOCATED ELECTRICAL EQUIPMENT. REASSIGN CIRCUITS AND LOADS ACCORDINGLY. PROVIDE COMPLETE "AS BUILT" DRAWINGS AND TYPEWRITTEN DIRECTORIES FOR PANELS.
13. WHERE NECESSARY TO SHUT OFF UTILITY SERVICES OR CAUSE INTERRUPTION TO POWER OR SIGNAL SYSTEMS WHILE A BUILDING IS OCCUPIED OR THAT EFFECT ADJACENT BUILDINGS, SCHEDULE OUTAGES OR INTERRUPTIONS WITH THE OWNER, BUILDING OCCUPANTS AND/OR ADJACENT BUILDING OWNER(S) AND OCCUPANTS PRIOR TO CONDUCTING OUTAGE(S) OR INTERRUPTIONS.

GENERAL NOTES

1. THE ELECTRICAL CONTRACTOR (EC) SHALL INCLUDE AND PROVIDE IN BID ALL LABOR AND MATERIALS NECESSARY FOR A COMPLETE AND OPERATIONAL INSTALLATION OF ALL ELECTRICAL SYSTEMS.
2. EC SHALL COORDINATE AND OBTAIN ALL APPROVALS, PERMITS, AND DOCUMENTS FROM REGULATORY AGENCIES AND UTILITY COMPANIES.
3. ALL CONDUIT RACEWAY SYSTEMS ARE TO BE INSTALLED AS FOLLOWS:
   - A. RIGID GALVANIZED STEEL IS TO BE INSTALLED IN ALL AREAS WHICH ARE EXPOSED TO WEATHER AND/OR PHYSICAL DAMAGE.
   - B. FLEXIBLE METALLIC CONDUIT I S PERMITTED FOR SHORT CONNECTIONS TO LIGHT FIXTURES (6'-0" MAX).
   - C. FLEXIBLE CONDUIT SHALL ALSO BE INSTALLED FOR EQUIPMENT REQUIRING VIBRATION ISOLATION AND HORIZONTAL RUNS IN WOODEN STUD WALLS. ELECTRICAL METALLIC TUBING (EMT) WITH COMPRESSION TYPE FITTINGS SHALL BE USED FOR BUILDING INTERIOR WORK.
   - D. PVC CONDUIT SHALL BE USED FOR UNDERGROUND CONDUITS. ROUTE CODE SIZED GROUND WIRE INSIDE OF CONDUIT. CONDUIT RISERS AND STUBS ABOVE GRADE SHALL BE I.M.C. WITH HALF-LAPPED TAPE COVERING OR PVC COATING AND UTILITY COMPANIES.
4. UNLESS OTHERWISE NOTED OR REFERENCED ON THE DRAWINGS ALL NEW ELECTRICAL WIRING IS TO BE 600V RATED COPPER WITH TYPE "THHN/THWN" INSULATION.
5. ALL MOUNTING HEIGHTS REFERENCED ON DRAWINGS ARE MEASURED FROM FINISHED FLOOR UNLESS OTHERWISE REFERENCED OR INDICATED ON THE DRAWINGS.
6. ALL ELECTRICAL EQUIPMENT LOCATIONS (LIGHTING, RECEPTACLE, FLOOR BOX, ETC.) ARE TO BE VERIFIED WITH THE ARCHITECT AND/OR EQUIPMENT SUPPLIER PRIOR TO BEGINNING ANY ROUGH-IN.
7. ALL LIGHTING FIXTURES SHALL BE MOUNTED AND SUPPORTED IN ACCORDANCE WITH OSHA STANDARDS, AND ALL STATE, LOCAL, SEISMIC, AND CALIFORNIA ELECTRIC CODES.
8. THE DRAWINGS INCLUDED IN THIS DOCUMENT SET ARE DIAGRAMMATIC. THEY ARE REPRESENTATIVE OF THE ENGINEER OF RECORDS DESIGN INTENT FOR ALL ELECTRICAL DEVICES/EQUIPMENT AND THE INDIVIDUAL POWER FEEDS THEY ARE TO BE CONNECTED TO. THE SELECTED EC SHALL BE RESPONSIBLE FOR PROVIDING ALL J-BOXES, CONDUIT, WIRING/CABLING, ETC. AS REQUIRED FOR A COMPLETE AND OPERATIONAL ELECTRICAL INSTALLATION.
9. ALL ELECTRICAL EQUIPMENT (PANELS, RECEPTACLES, J-BOXES, ETC.) SHALL BE WEATHERPROOF AND/OR INSTALLED IN A NEMA 3R ENCLOSURE WHERE APPLICABLE OR INSTALLED OUTDOORS.
10. ALL ELECTRICAL WORK SHALL BE PERFORMED ACCORDING TO STATE, LOCAL, NATIONAL, AND DISTRICT STANDARDS AND CODES. COORDINATE SPECIFIC REQUIREMENTS WITH DISTRICT STANDARDS AND AUTHORITY HAVING JURISDICTION.
11. ALL ELECTRICAL EQUIPMENT SHALL BE NEW AND IS TO BE CLEARLY LABELED/IDENTIFIED AS UNDERWRITER LABORATORIES (UL) COMPLIANT UNLESS OTHERWISE NOTED OR REFERENCED IN THE DRAWINGS OR SPECIFICATIONS.
12. EC IS RESPONSIBLE FOR SECURING ALL REQUIRED BUILDING PERMITS AND SHALL INCLUDE THE COST TO SECURE BUILDING PERMITS IN THEIR FINAL BID.
13. UNLESS OTHERWISE WRITTEN, STATED, OR REFERENCED IN DRAWINGS OR SPECIFICATIONS CONTRACTOR SHALL GUARANTEE THE COMPLETE ELECTRICAL INSTALLATION FOR A PERIOD OF 1-YEAR.
14. ALL ELECTRICAL DISTRIBUTION EQUIPMENT (PANELS, DISTRIBUTION BOARDS, TRANSFORMERS, ETC), FEEDERS (CONDUIT, CONDUCTOR SIZE, AND QUANTITY), MECHANICAL EQUIPMENT, ELEVATORS, VARIABLE FREQUENCY DRIVES (VFD'S), ETC. MAY ONLY BE REFERENCED ON THE SINGLE-LINE DRAWING AND NOT INDIVIDUAL PLAN SHEETS. EC SHALL REVIEW AND VERIFY ALL REFERENCED INFORMATION ON THE SINGLE-LINE DRAWING.
15. EC SHALL BE RESPONSIBLE FOR ALL REQUIRED SAW-CUTTING, CORE DRILLING, PATCHING, REFINISHING, ETC. AS REQUIRED FOR INSTALLATION OF ELECTRICAL EQUIPMENT AND SYSTEMS. ANY PENETRATIONS OR OPENINGS MADE IN WALLS OR STRUCTURES SHALL BE PATCHED AND/OR SEALED AS REQUIRED TO MAINTAIN THE INTEGRITY AND/OR RATING OF THE WALL OR STRUCTURE.
16. EC SHALL VISIT THE SITE PRIOR TO SUBMISSION OF THEIR FINAL BID TO VERIFY ALL EXISTING SITE CONDITIONS WHICH MAY AFFECT THE COMPLETION OF THE ELECTRICAL INSTALLATION. ALL METHODS AND REQUIREMENTS FOR INSTALLATION SHALL BE DETERMINED PRIOR TO BID DATE. ELECTRICAL EC SHALL NOTIFY THE ENGINEER OF RECORD OF ANY REQUIRED MODIFICATIONS WHICH ARE NOT REFERENCED ON THESE ELECTRICAL PLANS. SUBMITTAL OF THE EC'S BID DEMONSTRATES THE CONTRACTOR'S AWARENESS OF ALL SITE CONDITIONS AND REQUIRED WORK TO BE PERFORMED.
17. ALL CEILINGS AND CEILING SYSTEMS AS A RULE ARE CONSIDERED TO BE INACCESSIBLE. ALL ELECTRICAL DEVICES AND EQUIPMENT INSTALLED ABOVE CEILINGS ARE TO BE MOUNTED IN A LOCATION WHICH IS ACCESSIBLE. IN SITUATIONS WHERE ELECTRICAL DEVICES AND EQUIPMENT MUST BE INSTALLED IN AN AREA WHICH IS INACCESSIBLE, EC SHALL INSTALL AN ADEQUATELY SIZED, CODE COMPLIANT ACCESS PANEL AS REQUIRED BY CURRENT CODES - LOCATION OF THE REQUIRED ACCESS PANEL SHALL BE COORDINATE WITH THE ARCHITECT AND INTERIOR DESIGNER PRIOR TO ROUGH-IN.
18. EC IS RESPONSIBLE FOR COMPLETING ALL FINAL ELECTRICAL CONNECTIONS TO OWNER FURNISHED EQUIPMENT AND SHALL PROVIDE ALL MOTOR START SWITCHES, DISCONNECTS, ETC. AS REQUIRED.
19. ALL ELECTRICAL EQUIPMENT CONNECTIONS, MOUNTING LOCATIONS, ELECTRICAL REQUIREMENTS, ETC. ARE TO BE COORDINATED AND VERIFIED PRIOR TO COMMENCEMENT OF ELECTRICAL ROUGH-IN.
20. EC TO SUBMIT SHOP DRAWINGS FOR THE APPROVAL OF THE ELECTRICAL ENGINEER OF RECORD FOR ALL ELECTRICAL EQUIPMENT AND MATERIALS TO BE UTILIZED IN THE ELECTRICAL INSTALLATION. ALL APPROVALS BY THE ENGINEER OF RECORD MUST BE SECURED PRIOR TO COMPLETION OF ANY PURCHASE ORDERS OR ROUGH-IN WORK.
21. THESE ELECTRICAL DRAWINGS AND ASSOCIATED SPECIFICATIONS ARE TO BE CONSIDERED CONTRACT DOCUMENTS FOR AGENCY REVIEW/APPROVAL AND EC BIDDING PURPOSES.
22. THE COMPLETE ELECTRICAL SYSTEM SHALL BE GROUNDED IN ACCORDANCE WITH CEC ARTICLE 250. ALL POWER AND LIGHTING CIRCUITS SHALL BE INSTALLED WITH A MINIMUM #12AWG CU GROUND WIRE UNLESS OTHERWISE NOTED OR REFERENCED.
23. EC TO PROVIDE ENGRAVED PHENOLIC NAMEPLATES ON ALL DISCONNECT SWITCHES, DISTRIBUTION EQUIPMENT, J-BOXES ETC. WITH METALLIC COVERS. SEE GENERAL NOTES ON SINGLE-LINE DIAGRAM FOR SPECIFIC INFORMATION REGARDING NAMEPLATE REQUIREMENTS.
24. ELECTRICAL AND LIGHTING COVER PLATE COLOR, ENGRAVING AND LABELING PER SPECIFICATIONS.
25. AT THE COMPLETION OF THE PROJECT THE EC SHALL PROVIDE THE OWNER WITH A COMPLETE SET OF AS-BUILT ELECTRICAL DRAWINGS.
26. ANY AND ALL WORK THAT REQUIRES AN INTERRUPTION TO A BUILDING(S) ELECTRICAL SERVICE MUST BE COORDINATED WITH THE DISTRICT A MINIMUM OF 48 HOURS IN ADVANCE. ANY SERVICE DOWNTOWN SHALL NOT OCCUR DURING SCHOOL HOURS.
27. EC SHALL BE RESPONSIBLE FOR FOR ENSURING THAT ALL LOW VOLTAGE SYSTEMS ARE COMPATIBLE AND ARE COMPLETE AND OPERATIONAL.
28. EC SHALL PERMANENTLY TAG ALL CONDUCTORS IN EACH ELECTRICAL AND LOW VOLTAGE SYSTEM AS REFERENCED IN THE SPECIFICATIONS.
29. ANY SURFACE MOUNTED EXPOSED CONDUIT IN VIEW OF THE PUBLIC SHALL BE PAINTED TO MATCH THE FINISH OF THE SURFACE TO WHICH IT IS MOUNTED WITH TWO (2) COATS OF PAINT. ALL EXTERIOR SURFACE MOUNTED EXPOSED CONDUITS ARE TO BE PAINTED WITH TWO (2) COATS OF WEATHERPROOF LATEX PAINT.
30. EC TO PROVIDE ALL CONDUIT ONLY (C.O.) INFRASTRUCTURE WITH A 3/16" NYLON PULL ROPE. LABEL PULL ROPE AT EACH END WITH THE LOCATIONS OF ORIGIN AND TERMINATION.
31. IN INSTANCES WHERE A CONFLICT BETWEEN THE ELECTRICAL DRAWINGS AND THE SPECIFICATIONS FOR THE PROJECT EXISTS, THE EC SHALL ADHERE TO THE MORE STRINGENT REQUIREMENT.
32. ELECTRICAL DRAWINGS ARE DIAGRAMMATIC. AS SUCH, ALL ELECTRICAL EQUIPMENT LOCATIONS, CONDUIT ROUTING, ETC. ARE NOT PRECISE AND SHALL BE COORDINATED, VERIFIED, AND DETERMINED IN THE FIELD. EC TO INSTALL ALL ELECTRICAL EQUIPMENT AND ROUTE ALL CONDUITS IN LOCATIONS WHICH MEET CODE REQUIREMENTS FOR ACCESSIBILITY/MOUNTING AND DO NOT INTERFERE WITH ANY BUILDING STRUCTURES, UTILITIES, OR OTHER TRADE EQUIPMENT.
33. ALL EXISTING SITE RELATED ELECTRICAL EQUIPMENT (I.E. UNDERGROUND UTILITIES, DUCTS, STRUCTURES, PULL BOXES, ETC.) LOCATIONS ARE DIAGRAMMATIC IN NATURE AND ONLY REFLECT APPROXIMATE LOCATIONS, QUANTITIES, AND/OR ROUTING INFORMATION. ALL REFERENCED INFORMATION HAS EITHER BEEN SURVEYED, REPORTED BY THE OWNER/OWNERS REP, AND/OR REFERENCED ON AN AS-BUILT RECORD DOCUMENTS. ALL EXISTING ELECTRICAL EQUIPMENT REFERENCE D ON THESE DRAWINGS IS TO BE FIELD VERIFIED BY THE CONTRACTOR PRIOR TO COMMENCEMENT OF BY ACCEPTING THESE PLANS OR PROCEEDING WITH ELECTRICAL SCOPE OF WORK, AGREES TO ACCEPT LIABILITY AND SHALL RENDER THE ENGINEER OF RECORD HARMLESS FOR ANY ELECTRICAL EQUIPMENT NOT REPORTED TO THE ENGINEER DURING THE DESIGN PROCESS. THE CONTRACT TO TAKE THE REQUIRED PRECAUTIONARY MEASURES TO ENSURE ALL EXISTING ELECTRICAL EQUIPMENT IS PROTECTED IN PLACE.
34. ANY EXISTING BUILDING STRUCTURES OR SURFACES DAMAGED BY DEMOLITION OR DURING INSTALLATION ACTIVITIES SHALL BE REPAIRED, PATCHED, AND/OR REFINISHED TO THE SATISFACTION OF THE OWNER.
35. ALL EXISTING ELECTRICAL EQUIPMENT INDICATED TO BE DEMOLISHED SHALL BE REMOVED ENTIRELY AND ALL AFFECTED SURFACES OR STRUCTURES SHALL BE REPAIRED, REPLACED, AND/OR REFINISHED TO MATCH THE ADJACENT SURFACES OR DAMAGED ITEM(S).
36. FOR CLARITY ONLY RECONSTRUCTION OR NEW WORK RELATED ELEMENTS AND SELECT EXISTING FACILITIES SPECIFICALLY REQUIRING COORDINATION WITH ANY NEW WORK.
37. ALL CONDUITS, BOXES, SURFACE MOUNTED RACEWAYS, SUPPORT DEVICES, AND ASSOCIATED FITTINGS SHALL BE MOUNTED IN CONCEALED LOCATIONS ABOVE CEILINGS, DUCTS, TRUSSES, BEAMS, ETC. IN AREAS WHERE A CONCEALED MOUNTING LOCATION IS NOT AVAILABLE EQUIPMENT SHALL BE PAINTED TO MATCH THE ADJACENT SURFACES.
38. ANY PENETRATIONS BY CONDUITS OR OTHER ELECTRICAL EQUIPMENT THROUGH A FIRE RATED WALL - WHETHER EXISTING OR NEW - SHALL MAINTAIN THE APPROPRIATE FIRE RATING BY SEALING THE PENETRATION WITH THE APPROPRIATE UL-LISTED FIRE-STOP MATERIAL/SYSTEM.
39. ELECTRICAL CONTRACTOR SHALL PREPARE AND SUBMIT THE FOLLOWING CALIFORNIA ENERGY COMMISSION T-24 CERTIFICATE OF ACCEPTANCE LTG-1-1, PARTS 1, 2, & 3; LIGHTING CONTROL LTG-2-A; AND/OR AUTOMATIC DAYLIGHTING CONTROL LTG-3-A, AS THEY APPLY TO THE BUILDING DEPARTMENT PRIOR TO ISSUANCE OF THE CERTIFICATE OF OCCUPANCY.
40. ALL INFORMATION REFERENCED IS PRELIMINARY IN NATURE AND DOES NOT REPRESENT FINAL DESIGN DOCUMENTS. ALL INFORMATION AND REQUIREMENTS RELATIVE TO UTILITY INFRASTRUCTURE SHALL BE COORDINATED, VERIFIED, AND INSTALLED PER FINAL UTILITY COMPANY DESIGN DOCUMENTS.
41. ROUTING OF ALL CONDUIT SHALL BE COORDINATED IN THE FIELD AND CONFIRMED BY ENGINEER AND ARCHITECT.
42. COORDINATE ALL CONDUIT ROUTING, ELECTRICAL DEVICE LOCATIONS, PULL BOX LOCATIONS, ETC. WITH LANDSCAPE PLANTING PLANS TO AVOID CONFLICTS WITH TREES, SHRUBS, ETC.
43. ALL CONDUCTOR AND CABLE RUNS ARE TO BE CONTINUOUS. NO CONDUCTORS OR LOW VOLTAGE CABLING TO BE INSTALLED AS PART OF INCREMENT ONE. ALL CONDUCTORS AND LOW VOLTAGE CABLING TO BE INSTALLED AS PART OF INCREMENT TWO AND TERMINATED INSIDE OF THE BUILDING.
44. ALL CONDUIT SHALL BE PROVIDED WITH PROPERLY SIZED PULL STRING PER UTILITY COMPANY STANDARDS.
45. ALL EQUIPMENT MOUNTED OUTDOORS SHALL BE INSTALLED IN A WEATHERPROOF NEMA 3R ENCLOSURE.
46. SEE ARCHITECTURAL/LANDSCAPE ARCHITECTURAL PLANS FOR EXACT LOCATIONS OF FIXTURES, PULLBOXES, MANHOLES, OTHER ELECTRICAL DEVICES, ETC. COORDINATE ALL UNDERGROUND STRUCTURES AND CONDUIT ROUTING WITH LANDSCAPE ARCHITECT PRIOR TO ROUGH-IN TO ENSURE THAT SUCH ITEMS ARE NOT PLACED IN CRITICAL LANDSCAPE PLANTING/HARDSCAPE AREAS.
47. PROVIDE CONCRETE ENCASEMENT FOR ALL TRENCHES WITH MORE THAN THREE (3) CONDUITS. ALL UTILITY CONDUIT SHALL BE ENCASED PER UTILITY COMPANY REQUIREMENTS.

MEP SYSTEMS COMPONENT ANCHORAGE AND BRACING NOTES

1. ALL MECHANICAL, PLUMBING, AND ELECTRICAL COMPONENTS SHALL BE ANCHORED AND INSTALLED PER THE DETAILS ON THE DSA APPROVED CONSTRUCTION DOCUMENTS. THE FOLLOWING COMPONENTS SHALL BE ANCHORED OR BRACED TO MEET THE FORCE AND DISPLACEMENT REQUIREMENTS PRESCRIBED IN THE 2019 CBC, SECTIONS 1617A.1.18 THROUGH 1617A.1.26 AND ASCE 7-16 CHAPTERS 13, 26 AND 30:
   1. ALL PERMANENT EQUIPMENT AND COMPONENTS.
   2. TEMPORARY, MOVEABLE OR MOBILE EQUIPMENT THAT IS PERMANENTLY ATTACHED (e.g. HARD WIRED) TO THE BUILDING UTILITY SERVICES SUCH AS ELECTRICITY, GAS OR WATER. "PERMANENTLY ATTACHED" SHALL INCLUDE ALL ELECTRICAL CONNECTIONS EXCEPT PLUGS FOR 110/220 VOLT RECEPTACLES HAVING A FLEXIBLE CABLE.
   3. TEMPORARY, MOVABLE OR MOBILE EQUIPMENT WHICH IS HEAVIER THAN 400 POUNDS OR HAS A CENTER OF MASS LOCATED 4 FEET OR MORE ABOVE THE ADJACENT FLOOR OR ROOF LEVEL THAT DIRECTLY SUPPORT THE COMPONENT IS REQUIRED TO BE RESTRAINED IN A MANNER APPROVED BY DSA.
2. THE FOLLOWING MECHANICAL AND ELECTRICAL COMPONENTS SHALL BE POSITIVELY ATTACHED TO THE STRUCTURE, BUT NEED NOT DEMONSTRATE DESIGN COMPLIANCE WITH THE REFERENCES NOTED ABOVE. THESE COMPONENTS SHALL HAVE FLEXIBLE CONNECTIONS PROVIDED BETWEEN THE COMPONENT AND ASSOCIATED DUCTWORK, PIPING, AND CONDUIT. FLEXIBLE CONNECTIONS MUST ALLOW MOVEMENT IN BOTH TRANSVERSE AND LONGITUDINAL DIRECTIONS:
   - A. COMPONENTS WEIGHING LESS THAN 400 POUNDS AND HAVE A CENTER MASS LOCATED 4 FEET OR LESS ABOVE THE ADJACENT FLOOR OR ROOF LEVEL THAT DIRECTLY SUPPORT THE COMPONENT.
   - B. COMPONENTS WEIGHING LESS THAN 20 POUNDS, OR IN THE CASE OF DISTRIBUTED SYSTEMS, LESS THAN 5 POUNDS PER FOOT, WHICH ARE SUSPENDED FROM A ROOF OR FLOOR OR HUNG FROM A WALL.
3. THE ANCHORAGE OF ALL MECHANICAL, ELECTRICAL AND PLUMBING COMPONENTS SHALL BE SUBJECT TO THE APPROVAL OF THE DESIGN PROFESSIONAL IN GENERAL RESPONSIBLE CHARGE OR STRUCTURAL ENGINEER DELEGATED RESPONSIBILITY AND ACCEPTANCE BY DSA. THE PROJECT INSPECTOR WILL VERIFY THAT ALL COMPONENTS AND EQUIPMENT HAVE BEEN ANCHORED IN ACCORDANCE WITH ABOVE REQUIREMENTS.

PIPING DUCTWORK AND ELECTRICAL DISTRIBUTION SYSTEM BRACING NOTE

PIPING, DUCTWORK, AND ELECTRICAL DISTRIBUTION SYSTEMS SHALL BE BRACED TO COMPLY WITH THE FORCES AND DISPLACEMENTS PRESCRIBED IN ASCE 7-16 SECTION 13.3 AS DEFINED IN ASCE 7-16 SECTIONS 13.6.5, 13.6.6, 13.6.7, 13.6.8; AND 2019 CBC, SECTIONS 1617A.1.24, 1617A.1.25 AND 1617A.1.26.

THE METHOD OF SHOWING BRACING AND ATTACHMENTS TO THE STRUCTURE FOR THE IDENTIFIED DISTRIBUTION SYSTEM ARE AS NOTED BELOW. WHEN BRACING AND ATTACHMENTS ARE BASED ON A PREAPPROVED INSTALLATION GUIDE (e.g. OSHPD OPM FOR 2013 CBC OR LATER), COPIES OF THE BRACING SYSTEM INSTALLATION GUIDE OR MANUAL SHALL BE AVAILABLE ON THE JOBSITE PRIOR TO THE START OF AND DURING THE HANGING AND BRACING OF THE DISTRIBUTION SYSTEMS. THE STRUCTURAL ENGINEER OF RECORD SHALL VERIFY THE ADEQUACY OF THE STRUCTURE TO SUPPORT THE HANGER AND BRACE LOADS.

MECHANICAL PIPING (MP), MECHANICAL DUCTS (MD), PLUMBING PIPING (PP), ELECTRICAL DISTRIBUTION SYSTEMS (E):

MP	MD	PP	E	
☐	☐	☐	☐	OPTION 1: DETAILED ON THE APPROVED DRAWINGS WITH PROJECT SPECIFIC NOTES AND DETAILS.
☐	☐	☐	☒	OPTION 2: SHALL COMPLY WITH THE APPLICABLE PRE-APPROVAL (OPM#): MASON WEST 0043-13 OR MW SAUSSE 0203-13

IDENTIFICATION STAMP
DIV. OF THE STATE ARCHITECT
APP: 02-119490 INC:
REVIEWED FOR
SS ☑ FLS ☑ ACS ☑
DATE: 09/13/2022

LPA
ARCHITECTURE ENGINEERING INTERIORS
LANDSCAPE ARCHITECTURE PLANNING

916-287-2400 Office
916-287-2401 Fax
LPADesignStudios.com
431 I Street,
Suite 107
Sacramento, California 95814

REGISTERED PROFESSIONAL ENGINEER
STEPHEN BAKIN
E-17415
9/30/23
ELECTRICAL
STATE OF CALIFORNIA

This document and all other project documents, ideas, aesthetics and designs incorporated therein are instruments of service. All project documents are copyright protected, are the property of LPA, Inc. (LPA) and cannot be lawfully used in whole or in part for any project or purpose except as set forth in the contractual agreement between LPA and its Client. The unauthorized disclosure and/or use of the project documents (including the creation of derivative works), may give rise to liability for copyright infringement, unlawful disclosure, use or misappropriation of property rights held by LPA. The unauthorized use of the project documents will give rise to the recovery of monetary losses and damages including attorney fees and costs for which the unauthorized user will be held liable.
Project documents describe the design intent of the work and are not a representation of as-built or existing conditions. LPA is not responsible for any discrepancies between the project documents and the existing conditions.

© LPA, Inc.

DAVIS SENIOR HIGH SCHOOL
NEW AQUATICS CENTER
315 W 14TH ST., DAVIS, CA 95616

Developed for
DAVIS JOINT UNIFIED SCHOOL DISTRICT

Revision	Date

Submittal	Date
50% DESIGN DEVELOPMENT	06/15/2021
100% DD SUBMITTAL	07/26/2021
50% CD REVIEW	10/08/2021
100% CD DSA SUBMITTAL	10/22/2021
DSA SUBMITTAL	03/24/2022

Job Number	1904413
Date Published	03/24/2022
Checked By	LPA
Scale	

ELECTRICAL LEAD SHEET

E0.02

GENERAL NOTES - LIGHTING FIXTURE/SCHEDULE

1. ALL LIGHTING FIXTURES SHALL BE LABELED WITH THE APPROPRIATE UL LABEL (DAMP, WET, ETC.) AS REQUIRED BY CODES AND LOCAL ORDINANCES.

2. SHOP DRAWING SUBMITTALS SHALL INCLUDE ALL FIXTURES, AND DRIVERS/DIMMING INFORMATION. ANY SHOP DRAWINGS WHICH ARE SUBMITTED WITHOUT ANY ONE OF THESE ITEMS WILL BE REJECTED AS INCOMPLETE AND WILL BE REQUIRED TO BE RESUBMITTED WITH THE REQUIRED INFORMATION.

3. ALL LIGHTING FIXTURE SPECIFIC INFORMATION (TYPE, OUTPUT/LUMEN LEVEL, DRIVER, COLOR, MOUNTING, ETC.) HAS BEEN SPECIFIED WITH THE CONSIDERATION OF SPECIFIC PERFORMANCE AND AESTHETIC REQUIREMENTS. ANY SUBSTITUTION OF THE SPECIFIED FIXTURES IS SUBJECT TO THE ARCHITECT AND ENGINEER OF RECORD'S FINAL APPROVAL AND ARE SUBJECT TO THE FOLLOWING CRITERIA:

   a. SUBMIT AN OPERABLE SAMPLE OF THE SPECIFIED FIXTURE AND A 120V CORD AND PLUG (AND DRIVER TO OPERATE SAMPLE IF NECESSARY).

   b. PROVIDE COMPLETE PHOTOMETRIC REPORT(S) FOR THE SITE AND/OR FLOOR PLAN CONFIRMING SUBSTITUTE FIXTURE(S) MEET OR EXCEED DESIGNED ILLUMINANCE LEVELS IN SPACES IDENTIFIED. CLEARLY IDENTIFY ILLUMINANCE LEVELS (IN FOOT-CANDLES), AND ALL INPUT DATA UTILIZED IN THE CALCULATION (LUMEN OUTPUTS, LIGHT LOSS FACTORS, ETC.). IN SITUATIONS WHERE SUBSTITUTIONS AFFECT FIXTURES EQUIPPED WITH EMERGENCY BATTERY PACKS OR OTHER EMERGENCY SOURCES OF POWER, PROVIDE ADDITIONAL PHOTOMETRIC REPORT(S) THAT CLEARLY IDENTIFY A MINIMUM OF 1 FOOT-CANDLE ALONG THE PATH(S) OF EGRESS, ALL INPUT DATA UTILIZED IN THE CALCULATION, AND THE LUMEN RATING AND QUANTITY OF FIXTURES FOR THE EMERGENCY BATTERY PACK. SEE BELOW FOR PHOTOMETRIC PLAN GUIDELINES:

      1. POINT BY POINT SPACING IS NOT TO EXCEED 10'-0" IN ANY DIRECTION ON SITE PLANS; SPACING IS NOT TO EXCEED 4'-0"IN ANY DIRECTION ON INTERIOR FLOOR PLANS.

      2. PHOTOMETRIC STUDY IS TO BE BASED ON MAINTAINED ILLUMINANCE LEVELS (IN FOOT-CANDLES) USING MEAN FIXTURE LUMENS AND THE SAME LIGHT LOSS FACTORS USED IN THE ORIGINAL DESIGN CALCULATIONS PERFORMED BY THE ENGINEER OF RECORD.

      3. ASSOCIATED REPORT TO INCLUDE AN ENERGY COST MODEL WHICH IDENTIFIES ADDITIONAL ENERGY OR ENERGY COSTS FOR A 10-YEAR PERIOD AS COMPARED TO THE ORIGINAL ITEM SPECIFIED. ALL ADDITIONAL EXPENSES WILL BE SUBTRACTED FROM THE CONTRACT COST.

   c. WHERE APPLICABLE, TEST SWITCH MOUNTING (INTEGRAL OR REMOTE) SHALL MATCH THE MOUNTING AS SPECIFIED ON THE DESIGN DOCUMENTS. CONTRACTOR IS RESPONSIBLE FOR PROVIDING ALL COVER PLATES, TRIMS, REFLECTORS, ETC. NECESSARY FOR THE SPECIFIC TEST SWITCH MOUNTING.

   d. MANUFACTURER'S CATALOG CUT SHEET WHICH INCLUDES BUT IS NOT LIMITED TO THE FOLLOWING INFORMATION: LUMEN LEVEL, DRIVER/TRANSFORMER OPTIONS, VOLTAGES, OPTICS, EPA RATING (WHERE APPLICABLE), FIXTURE DIMENSIONS, EMERGENCY OPTIONS (WHERE APPLICABLE), AND FIXTURE FINISHES.

   e. FOR ALL SITE LIGHTING FIXTURES, PROVIDE POLE SPECIFICATIONS WITH SUPPLEMENTAL DOCUMENTATION IDENTIFYING POLE SIZE IS RATED ACCORDINGLY BASED ON FIXTURE(S) EPA AND WIND RATING FOR THE PROJECT ZONE.

   f. A SIGNED COPY OF THE "SUBSTITUTION COMPLIANCE FORM" LOCATED IN THE DIVISION 1 SPECIFICATION WHICH STATES THAT IF THE PROPOSED SUBSTITUTION IS ACCEPTED, THEN THE PROJECT SCHEDULE WILL NOT BE NEGATIVELY AFFECTED. IF THE COMPLETION OF THE PROJECT IS DELAYED DUE TO THE PROPOSED SUBSTITUTION, THEN THE ELECTRICAL CONTRACTOR WILL BE RESPONSIBLE FOR ANY AND ALL ESTABLISHED LIQUIDATED DAMAGES.

   g. CONTRACTOR TO PROVIDE ARCHITECT AND ENGINEER OF RECORD WITH ALL SUBSTITUTE INFORMATION REFERENCED ABOVE NO LATER THAN TWO WORKING WEEKS PRIOR TO THE BID DEADLINE.

4. CATALOG NUMBERS AS REFERENCED ON THE FIXTURE SCHEDULE PROVIDE GENERAL FIXTURE INFORMATION. CONTRACTOR SHALL REVIEW LIGHTING PLANS AND SPECIFICATIONS TO VERIFY ALL FIXTURE ASSOCIATED DESIGN INFORMATION. THE CONTRACTOR IS RESPONSIBLE FOR PROVIDING ALL NECESSARY PARTS AND PIECES REQUIRED FOR A COMPLETE AND OPERATIONAL INSTALLATION. ANY DISCREPANCIES BETWEEN DESCRIPTIONS, SPECIFICATIONS, AND CATALOG NUMBERS ARE TO BE PRESENTED TO THE ENGINEER OF RECORD PRIOR TO COMPLETION OF THE BID PROCESS FOR CLARIFICATION.

5. ALL COLOR SPECIFIC INFORMATION WHICH RELATES TO LIGHTING FIXTURES AND/OR THEIR RELATED PARTS ARE TO BE REVIEWED AND COMMENTED ON BY THE ARCHITECT. FIXTURES WHICH REQUIRE A CUSTOM COLOR WILL HAVE A CUSTOM COLOR PAINT WHICH WILL BE INCLUDED IN THE ARCHITECT'S SHOP DRAWING REVIEW COMMENTS.

6. ALL LIGHTING EQUIPMENT LOCATIONS ARE TO BE COORDINATED WITH THE ARCHITECTURAL REFLECTED CEILING PLAN PRIOR TO ORDERING AND INSTALLING.

7. ENSURE COMPATIBILITY OF ALL DIMMING SYSTEMS AND INDIVIDUAL LIGHTING CONTROLS WITH FIXTURES, AND DRIVERS. ALL COMPONENTS TO BE FACTORY CERTIFIED COMPATIBLE FOR A FULL RANGE OF DIMMING.

8. LIGHTING FIXTURE CLEARANCES FROM COMBUSTIBLE MATERIALS ARE TO BE A MINIMUM OF ½" (OTHER THAN AT POINTS OF SUPPORT) AND 3" FROM INSULATION FOR NON-IC RATED RECESSED LIGHTING FIXTURES.

9. ALL LIGHTING FIXTURES WHICH ARE TO BE MOUNTED IN FOOD SERVICE AREAS SHALL BE PROVIDED WITH THE FOLLOWING CHARACTERISTICS: DOOR TO FRAME GASKETS, LENS TO FRAME GASKETS, INVERTED LENS, AND A FOOD SERVICE RATING.

10. ALL LIGHTING FIXTURES TO BE MOUNTED IN A SUSPENDED CEILING ARE TO BE SUPPORTED BY T-BAR CLIPS AND (2) #12 SUPPORT WIRES ATTACHED TO THE BUILDING FRAME. IN ADDITION, LIGHTING FIXTURE ARE TO BE SECURED TO THE CEILING GRID WITH (4) SHEET METAL SCREWS ((1) AT EACH CORNER OF THE FIXTURE) – SCREWS SHALL BE NEITHER VISIBLE NOR IMPEDE THE INSTALLATION OF CEILING TILES; UON. WITH MANUFACTURER'S INSTALLATION INSTRUCTIONS.

11. CONTRACTOR TO FOLLOW COLOR TEMPERATURE GUIDELINES LISTED BELOW UNLESS OTHERWISE NOTED OR SPECIFIED:

    a. 3500K FOR ALL INTERIOR ENVIRONMENTS

    b. 3000K FOR ALL EXTERIOR ENVIRONMENTS

12. CONTRACTOR TO FOLLOW CRI AND TM30 VALUES GUIDELINES LISTED BELOW UNLESS OTHERWISE NOTED OR SPECIFIED:

    a. CRI 80 FOR INTERIOR

    b. TM30 RF VALUE ≥ 78 FOR INTERIOR

    c. TM30 RG VALUE ≥ 98 FOR INTERIOR

    d. CRI 70 FOR EXTERIOR

13. ALL FIXTURES, TRIMS, AND MODULES/LAMPS SHALL BE CLEANED AND FREE FROM DIRT, DUST, LABEL/ADHESIVE, AND FINGER PRINTS.

14. IN THE EVENT OF THE FAILURE OF NORMAL POWER SUPPLIES, EMERGENCY LIGHTING FIXTURES SHALL BE AUTOMATICALLY POWERED BY AN EMERGENCY POWER SYSTEM. THE FIXTURE SHALL BE EITHER:

    a. CIRCUITED TO AN EMERGENCY POWER SYSTEM, OR

    b. EMERGENCY BATTERY PACKS ARE TO BE PROVIDED. WHERE EMERGENCY BATTERY PACKS ARE PROVIDED, EMERGENCY LIGHTING FIXTURES AND BATTERY PACKS ARE TO MEET THE FOLLOWING CRITERIA:

       1. FIXTURES SPECIFIED WITH INTEGRAL EMERGENCY BATTERY PACKS ARE TO BE FED WITH/PROVIDED WITH A CONSTANT HOT CONNECTION TO THE CHARGING LEAD.

       2. APPROVED EMERGENCY BATTERY PACKS SHALL BE PROVIDED AS FOLLOWS: BODINE #BSL23 OR #BSL722 OR EQUAL IF AVAILABLE.

       3. ALL LED FIXTURES EQUIPPED WITH EMERGENCY BATTERY PACKS SHALL HAVE THE BATTERY PACKS FACTORY INSTALLED AND TESTED AT THE FIXTURE MANUFACTURER'S FACILITY TO ENSURE UL LISTING OF THE FIXTURE IS MAINTAINED. FIELD INSTALLATION OF LED EMERGENCY BATTERY PACKS IS STRICTLY PROHIBITED. NOTIFY ENGINEER OF RECORD SHOULD SPECIFIED FIXTURE NOT HAVE ADEQUATE SPACE TO ACCOMMODATE THE EMERGENCY BATTERY PACK. CONTRACTOR TO MODIFY BASE BID TO INCLUDE ALL NECESSARY EQUIPMENT FOR A COMPLETE OPERATIONAL, ADEQUATELY SIZED MINIATURE INVERTER SYSTEM TO BE MOUNTED IN NEAREST ELECTRICAL ROOM IN THE EVENT THE BATTERY PACK CAN NOT BE INSTALLED IN THE FIXTURE.

       4. ALL BATTERY PACKS ARE TO BE FACTORY INSTALLED IN FIXTURE ASSEMBLIES WHEN APPLICABLE. ELECTRICAL CONTRACTOR IS RESPONSIBLE FOR CONTACTING FIXTURE MANUFACTURERS TO VERIFY SPECIFIED (OR APPROVED SUBSTITUTE) FIXTURE HAS ADEQUATE SPACE WITHIN THE FIXTURE TO MOUNT THE EMERGENCY BATTERY PACK. IF IT IS DETERMINED THE BATTERY PACK CANNOT BE MOUNTED IN THE FIXTURE, THEN CONTRACTOR SHALL INCLUDE ALL COSTS REQUIRED FOR REMOTE MOUNTING THE EMERGENCY BATTERY PACK ABOVE NEAREST ACCESSIBLE CEILING. ENSURE DISTANCE FROM FIXTURE TO REMOTE BATTERY PACK LOCATION DOES NOT EXCEED THE MANUFACTURER'S RECOMMENDED DISTANCES. COORDINATE ALL ACCESS PANELS WITH ARCHITECT OF RECORD PRIOR TO INSTALL.

       5. ALL LIGHTING FIXTURES WITH EMERGENCY BATTERY PACKS ARE TO BE PROVIDED WITH INTEGRAL TEST SWITCHES AND CHARGE LIGHTS UNLESS OTHERWISE NOTED OR REQUIRED BY THE AUTHORITY HAVING JURISDICTION (AHJ). IN THE EVENT INTEGRAL TEST SWITCHES ARE NOT ALLOWED, NOTIFY THE ENGINEER OF RECORD PRIOR TO INSTALLATION OF REMOTE TEST SWITCHES. TEST SWITCHES TO BE INSTALLED IN FIXTURES WITH A MINIMUM OF 18" OF ADDITIONAL WIRING TO ALLOW FOR GENERAL FIXTURE MAINTENANCE.

       6. SHUNT UL 924 WILL BE PROVIDED IN CONTROL SYSTEM OR WITHIN FIXTURE TO RAISE EMERGENCY LIGHT FIXTURE TO 100% AT TIME OF EMERGENCY.

15. EMERGENCY ILLUMINATION UNITS SHALL BE ARRANGED TO PROVIDE AT LEAST AN AVERAGE OF 1 FOOT-CANDLE AND A MINIMUM OF 0.1 FOOT-CANDLE MEASURED ALONG THE PATH OF EGRESS. A MAXIMUM-TO-MINIMUM ILLUMINATION UNIFORMITY RATIO OF 40-TO-1 SHALL NOT BE EXCEEDED. WHERE LOCAL CODES OR ORDINANCES REQUIRE MORE STRINGENT ILLUMINATION OR CONTRAST RATIOS, EMERGENCY ILLUMINATION UNITS SHALL MEET OR EXCEED LOCAL CODE OR ORDINANCE REQUIREMENTS.

16. INSTALL ALL EXIT SIGNS IN ACCORDANCE WITH THE LOCAL AHJ AND FIRE AUTHORITY. THE CONTRACTOR IS RESPONSIBLE FOR PROVIDING ALL REQUIRED PARTS, PIECES, AND MOUNTING HARDWARE FOR EXIT SIGNS, AS WELL AS ENSURING THE EXIT SIGNS ARE MOUNTED IN AN APPROVED VISIBLE LOCATION. VERIFY ALL REQUIRED CHEVRONS, MIRRORS, AND FACES ARE PROVIDED AS REFERENCED ON THE ARCHITECTURAL REFLECTED CEILING PLAN. NOTIFY ARCHITECT AND ENGINEER OF RECORD OF ANY DISCREPANCIES BETWEEN ARCHITECTURAL AND ELECTRICAL DRAWINGS PRIOR TO ORDERING OF EQUIPMENT.

17. TRACK LIGHTING FIXTURE SPECIFICATIONS ARE TO BE COORDINATED, VERIFIED, AND CONFIRMED WITH EQUIPMENT MANUFACTURER AND/OR DISTRIBUTOR PRIOR TO ORDERING AND INSTALLING. CONTRACTOR IS RESPONSIBLE FOR PROVIDING ALL NECESSARY PARTS AND PIECES FOR A COMPLETE, FUNCTIONAL, AND OPERATIONAL INSTALLATION. TRACK LENGTHS ARE AS SPECIFIED ON THE FIXTURE SCHEDULE.

18. CONTRACTOR SHALL INSTALL ALL LIGHTING FIXTURES PER LOCAL AND NATIONAL BUILDING, ELECTRICAL, AND SEISMIC CODES. CONTRACTOR IS RESPONSIBLE FOR PROVIDING ALL REQUIRED MOUNTING HARDWARE AND BRACING MATERIALS FOR COMPLETE AND CODE COMPLIANT INSTALLATION. COORDINATE REQUIREMENTS WITH AUTHORITY HAVING JURISDICTION PRIOR TO INSTALLATION.

19. CONTRACTOR TO INCLUDE IN BASE BID A MINIMUM OF 2-HOURS FOR A ONE TIME AIMING AND ADJUSTMENT TIME OF ALL MULTI-HEAD AND DIRECTIONAL FIXTURE ASSEMBLIES. AIMING AND ADJUSTMENT TO BE SCHEDULED FOR A NIGHT AND AFTER HOURS WITH THE ARCHITECT, ENGINEER, AND OWNER PRESENT. CONTRACTOR IS RESPONSIBLE FOR SCHEDULING AN APPROPRIATE TIME PRIOR TO ORDERING THE FINAL PUNCH WALK FOR THE PROJECT.

20. SUPPLEMENTARY OVERCURRENT PROTECTION PANEL FOR TRACK LIGHTING SYSTEMS TO BE PROMINENTLY LABELED AS FOLLOWS:

    NOTICE: THIS PANEL FOR TRACK LIGHTING ENERGY CODE COMPLIANCE ONLY. THE OVERCURRENT PROTECTION DEVICES IN THIS PANEL SHALL ONLY BE REPLACED WITH THE SAME OR LOWER AMPERAGE. NO OTHER OVERCURRENT PROTECTIVE DEVICE(S) SHALL BE ADDED TO THIS PANEL. ADDING TO, OR REPLACEMENT OF EXISTING OVERCURRENT PROTECTIVE DEVICE(S) WITH HIGHER CONTINUOUS AMPERE RATING, WILL VOID THE PANEL LISTING AND REQUIRE RESUBMITTAL AND RE-CERTIFICATION OF CALIFORNIA TITLE 24, PART 6 COMPLIANCE DOCUMENTATION.

21. LED DRIVERS SHALL CONFORM TO IEEE P1789 STANDARDS. ALTERNATIVELY, MANUFACTURERS MUST DEMONSTRATE CONFORMANCE WITH PRODUCT LITERATURE AND TESTING WHICH DEMONSTRATES THIS PERFORMANCE. SYSTEM THAT DO NOT MEET IEEE P1789 WILL NOT BE CONSIDERED.

22. LED DRIVERS WILL NOT HAVE VOLTAGE LEAK OR CONTAIN A FILTER WITHIN THE CONTROL MODULE TO CONTROL THE VOLTAGE LEAK AND REDUCE THE CHANCES OF FLICKERING.

23. LED DIODES SHALL BE SOURCED WITHIN 3 MACADAMS ELLIPSE ALONG THE BLACK BODY CURVE.

LIGHTING CONTROL SYSTEM REQUIREMENTS

1. THE CONTRACTOR SHALL BE RESPONSIBLE FOR THE FURNISHING OF ALL MATERIAL, LABOR, EQUIPMENT, AND SERVICES, IN CONNECTION WITH THE INSTALLATION OF A COMPLETE AND FULLY FUNCTIONING AND CODE COMPLIANT INSTALLATION.

2. IT IS THE INTENT OF THE CONTRACT DOCUMENTS, WHICH ARE PRESENTED IN A DIAGRAMMATIC FORMAT, TO PROVIDE CONTRACTOR INFORMATION THAT SUPPLEMENTS AND ENHANCES THE GENERALLY ACCEPTED CONSTRUCTION MEANS, METHODS, TECHNIQUES, SEQUENCES AND PROCEDURES EMPLOYED IN CONNECTION WITH INSTALLATION OF THIS TYPE OF PRODUCT / SYSTEM.

3. THE CONTRACTOR SHALL ALSO INCORPORATE THE REQUIREMENTS OF THE MANUFACTURER'S INSTALLATION INSTRUCTIONS / WARRANTY REQUIREMENTS AS PART OF THE REQUIREMENTS OF THE CONSTRUCTION DOCUMENTS. IN THE EVENT OF A CONFLICT BETWEEN THE CONTRACT DOCUMENT REQUIREMENTS AND THE MANUFACTURERS INSTALLATION REQUIREMENTS, THE MORE STRINGENT REQUIREMENTS SHALL APPLY - UNLESS THE MORE STRINGENT REQUIREMENT VOIDS APPLICABLE WARRANTIES OR VIOLATES THE REQUIREMENTS OF THE LOCAL AUTHORITY HAVING JURISDICTION. ANY SUCH CONFLICT SHALL IMMEDIATELY BE BROUGHT TO THE ATTENTION OF THE ENGINEER IN WRITING THROUGH THE FORMAL RFI PROCESS.

4. REFER TO THE ASSOCIATED SCHEDULES, SCHEMATICS, DRAWINGS, AND SPECIFICATIONS FOR DETAILED INFORMATION / REQUIREMENTS ON THIS PRODUCT / SYSTEM.

5. THE LIGHTING RELAY PANEL SYSTEM SHALL BE LC&D, HUBBELL, nLIGHT ARP OR EQUAL.

6. LIGHTING CONTROL SYSTEM MUST INTERGRATE WITH DISTRICT APPROVED AUTOMATED LOGIC ENERGY MANAGAMENT SYSTEM.

7. PROVIDE (6) "SPARE" ADDITIONAL RELAYS.

IDENTIFICATION STAMP
DIV. OF THE STATE ARCHITECT
APP: 02-119490 INC:
REVIEWED FOR
SS ☑ FLS ☑ ACS ☑
DATE: 09/13/2022

LPA

ARCHITECTURE ENGINEERING INTERIORS
LANDSCAPE ARCHITECTURE PLANNING

916-287-2400 Office

916-287-2401 Fax

LPADesignStudios.com

431 I Street,
Suite 107
Sacramento, California 95814

REGISTERED PROFESSIONAL ENGINEER
STEPHEN BARTLETT
E-17415
9/30/23
ELECTRICAL
STATE OF CALIFORNIA

This document and all other project documents, ideas, aesthetics and designs incorporated therein are instruments of service. All project documents are copyright protected, are the property of LPA, Inc. (LPA) and cannot be lawfully used in whole or in part for any project or purpose except as set forth in the contractual agreement between LPA and its Client. The unauthorized disclosure and/or use of the project documents (including the creation of derivative works), may give rise to liability for copyright infringement, unlawful disclosure, use or misappropriation of property rights held by LPA. The unauthorized use of the project documents will give rise to the recovery of monetary losses and damages including attorney fees and costs for which the unauthorized user will be held liable.
Project documents describe the design intent of the work and are not a representation of as-built or existing conditions. LPA is not responsible for any discrepancies between the project documents and the existing conditions.

© LPA, Inc.

DAVIS SENIOR HIGH SCHOOL
NEW AQUATICS CENTER
315 W 14TH ST., DAVIS, CA 95616

Developed for
DAVIS JOINT UNIFIED SCHOOL DISTRICT

Revision	Date

Submittal	Date
50% DESIGN DEVELOPMENT	06/15/2021
100% DD SUBMITTAL	07/26/2021
50% CD REVIEW	10/08/2021
100% CD DSA SUBMITTAL	10/22/2021
DSA SUBMITTAL	03/24/2022

Job Number	1904413
Date Published	03/24/2022
Checked By	LPA
Scale	

LIGHTING FIXTURE NOTES AND LCP SCHEDULES

E0.20

IDENTIFICATION STAMP
DIV. OF THE STATE ARCHITECT
APP: 02-119490 INC:
REVIEWED FOR
SS ☑ FLS ☑ ACS ☑
DATE: 09/13/2022

LIGHTING FIXTURE SCHEDULE

			Electrical			Source						Manufacturer				Mounting				
Type	Name	Description	Apparent Load	Voltage	Driver	Type	Lumens	CCT	CRI	Condition	BUG Rating	Name	Model Number	Equal 1	Equal 2	Height	Details	Fixture Weight	Finish	Location
P1	4' Pendant Mounted Strip Light	"76R LED Round Lens Strip" with acrylic lens, 4' length, modified to be 4000 lumens, aircraft cable feeder/stand-alone mounting for exposed deck ceiling, 96" cables to be cut to length in the field, 96" white S cord, universal voltage.	31 VA	277 V	Integral 0-10V Dimming to 10%	LED	4047 lm	3500K	80	Interior	N/A	H.E. WILLIAMS	#76R-4-L52/835-(L40)-ACFL/D96-DIM-UNV + #S96W	LITHONIA "CLX"	METALUX "SNLED"	9' - 0" AFF	5/E7.04	10 LBS	White	Storage, Pool Mechanical, Electrical
P1-120	4' Pendant Mounted Strip Light (120v)	Same as P1 above. (120V)	31 VA	120 V	Integral 0-10V Dimming to 10%	LED	4047 lm	3500K	80	Interior	N/A	H.E. WILLIAMS	#76R-4-L52/835-(L40)-ACFL/D96-DIM-UNV + #S96W	LITHONIA "CLX"	METALUX "SNLED"	9' - 0" AFF	5/E7.04	10 LBS	White	Storage, Custodial, IDF
P2	4' Pendant Mounted Strip Light (Chemical)	"C3 Extreme Series Surface Mount" with hazardous location rating, 4' length, pendant mounting, universal voltage, stainless steel finish, .125" white acrylic lens; plus aircraft cable mounting.	40 VA	277 V	Integral 0-10V Dimming to 10%	LED	3620 lm	3500K	80	Interior	N/A	PARAMOUNT	#PMHC3-4-PM-UNV-35K-CRI83-36L-S4-L3-LD + Aircraft Cable Mounting	None Known	None Known	9' - 0" AFF	5/E7.04	19 LBS	Stainless Steel	Chemical
R1	2x4 Recessed Direct/Indirect	"Equation 2 LED" troffer with 2x4 nominal size, opal acrylic lens, single circuit, universal voltage, ceiling grid mounting type to be determined, matte satin white finish.	34 VA	277 V	Integral 0-10V Dimming to 10%	LED	4500 lm	3500K	80	Interior	N/A	FOCAL POINT	#FEQ2-24-AC-4500LH-35K-1C-UNV-LD1-G1/G2-WH	MARK LIGHTING "Whisper LED"	AXIS "Plano 2x4 LED"	N/A	6/E7.04	27.3 LBS	White	Office
R2	4" Recessed Square Downlight	"ID+ 4.5" Square Downlight" with square overlap trim type housing, standard white color, thermally protected housing type, bar hangers, 50-degree cut-off optic, wide flood distribution, clear diffuse color, white painted flange.	11 VA	120 V	Integral 0-10V Dimming to 10%	LED	1016 lm	3500K	80	Interior	N/A	FOCAL POINT	#FLC44D-SO-SW-1000L-120-LD1-T-BH-LC44-SDO-1000L-35K-DN-WFL-CD-WP	GOTHAM "Evo 4" Square"	PORTFOLIO "LD4A Square"	N/A	1/E7.04	6 LBS	Clear Reflector, White Flange	Restrooms
R3-6	6'-0" Recessed Perimeter Wall Slot	"Seem 4 LED Perimeter" with adjustable lit housing, 2" regressed shielding, single circuit, universal voltage, trimless drywall mounting, matte white housing, exact length to be verified. Approximate length: 6'-9 7/8"	24 VA	120 V	Integral 0-10V Dimming to 10%	LED	400 lm/ft	3500K	80	Interior	N/A	FOCAL POINT	#FSM4PR-ALH-FL2-400LF-35K-IC-UNV-LD1-XF-WH-[Contractor to verify exact length]	SELUX "M100 Regressed Perimeter Mount"	AXIS "Beam 4 Perimeter Recessed"	N/A	2 & 3/A9.22	4.75 LBS/FT	White	Restrooms
R3-7	7'-0" Recessed Perimeter Wall Slot	Same as R3-7 above, except in length. Approximate lengths: 7'-4 1/8" and 7'-4 1/2"	28 VA	120 V	Integral 0-10V Dimming to 10%	LED	400 lm/ft	3500K	80	Interior	N/A	FOCAL POINT	#FSM4PR-ALH-FL2-400LF-35K-IC-UNV-LD1-XF-WH-[Contractor to verify exact length(s)]	SELUX "M100 Regressed Perimeter Mount"	AXIS "Beam 4 Perimeter Recessed"	N/A	2 & 3/A9.22	4.75 LBS/FT	White	Restrooms
R3-8	7'-5" Recessed Perimeter Wall Slot	Same as R3-7 above, except in length. Approximate lengths: 7'-5 1/8" and 7'-5 1/2"	32 VA	120 V	Integral 0-10V Dimming to 10%	LED	400 lm/ft	3500K	80	Interior	N/A	FOCAL POINT	#FSM4PR-ALH-FL2-400LF-35K-IC-UNV-LD1-XF-WH-[Contractor to verify exact lengt(s)]	SELUX "M100 Regressed Perimeter Mount"	AXIS "Beam 4 Perimeter Recessed"	N/A	2 & 3/A9.22	4.75 LBS/FT	White	Restrooms
R3-14	14'-0" Recessed Perimeter Wall Slot	Same as R3-7 above, except in length. Approximate length: 14'-8 1/2".	56 VA	120 V	Integral 0-10V Dimming to 10%	LED	400 lm/ft	3500K	80	Interior	N/A	FOCAL POINT	#FSM4PR-ALH-FL2-400LF-35K-IC-UNV-LD1-XF-WH-[Contractor to verify exact length]	SELUX "M100 Regressed Perimeter Mount"	AXIS "Beam 4 Perimeter Recessed"	N/A	2 & 3/A9.22	4.75 LBS/FT	White	Restrooms
R3-L1	L-Shape Recessed Perimeter Wall Slot (Girls Restroom 1013)	Same as R3-7 above, except L-shape pattern with one inside corner (right). Approximately length of each leg: 23'-4 3/4", 15'-7 1/4"	160 VA	120 V	Integral 0-10V Dimming to 10%	LED	400 lm/ft	3500K	80	Interior	N/A	FOCAL POINT	#FSM4PR-ALH-FL2-400LF-35K-IC-UNV-XF-WH-PAT-ICR-[Contractor to verify exact length of each leg]	SELUX "M100 Regressed Perimeter Mount"	AXIS "Beam 4 Perimeter Recessed"	N/A	2 & 3/A9.22	4.75 LBS/FT	White	Restrooms
R3-L2	L-Shape Recessed Perimeter Wall Slot (Boys Restroom 1014)	Same as R3-7 above, except L-shape pattern with one inside corner (left). Approximately length of each leg: 22'-10", 15'-7 3/4"	152 VA	120 V	Integral 0-10V Dimming to 10%	LED	400 lm/ft	3500K	80	Interior	N/A	FOCAL POINT	#FSM4PR-ALH-FL2-400LF-35K-IC-UNV-XF-WH-PAT-ICL-[Contractor to verify exact length of each leg]	SELUX "M100 Regressed Perimeter Mount"	AXIS "Beam 4 Perimeter Recessed"	N/A	2 & 3/A9.22	4.75 LBS/FT	White	Restrooms
S1	4' Surface Mounted Linear (Wet)	"Seem 4 Surface Mount - Wet Location with flush satin lens shielding, single circuit, universal voltage, surface mounting, outdoor rated, custom color housing finish to match Sherwin Williams SW6971 'Morning Glory', 4' length.	32 VA	277 V	Integral 0-10V Dimming to 10%	LED	875 lm/ft	3000K	80	Exterior	N/A	FOCAL POINT	#FSM4LWLS-BW-FL-875LF-30-1C-UNV-LD1-SM-[Custom Color Finish]-4'	SELUX "M125 LED Direct"	AXIS "Wet Beam 4 LED"	N/A	19/S6.91	18 LBS	Custom Color	Bleacher Canopy
S2	Surface Mounted Square Downlight	"66 159" ceiling mounted square downligh with LED module modified to be 3W, custom color finish to match Sherwin Williams SW6971 'Morning Glory; plus surface wiring box cover with machined notch for two 1/2" side entry in/out conduits on one side.	6 VA	277 V	Integral 0-10V Dimming to 10%	LED	1674	3000K	80	Exterior	N/A	BEGA	#66159-K3-CUS + #SWBC-CUS-[Notches Per Description]	None Known	None Known	N/A	2/E7.04, 18/A8.01	3.5 LBS	Custom Color	Building Canopy
S2-120	Surface Mounted Square Downlight (120V)	Same as S2 above. (120V)	6 VA	120 V	Integral 0-10V Dimming to 10%	LED	1674	3000K	80	Exterior	N/A	BEGA	#66159-K3-CUS + #SWBC-CUS-[Notches Per Description]	None Known	None Known	N/A	2/E7.04, 18/A8.01	3.5 LBS	Custom Color	Building Canopy
W1	Wall Mounted Area Light	"22 383" wall luminaire with wide spread light distribution, silver finish.	21 VA	277 V	Integral 0-10V Dimming to 10%	LED	2187	3000K	80	Exterior	B1-U0-G1	BEGA	#22383-K3-SLV	None Known	None Known	Bottom of Fixture at 6'-8" A.F.G.; Pool Mechanical Building: Bottom of Fixture at 12'-0" A.F.G.	4/E7.04, 24/A8.01	6.8 LBS	Silver	Pool Storage Enclosure
W1-120	Wall Mounted Area Light (120V)	Same as W1 above. (120V)	21 VA	120 V	Integral 0-10V Dimming to 10%	LED	2187	3000K	80	Exterior	B1-U0-G1	BEGA	#22383-K3-SLV	None Known	None Known	Bottom of Fixture at 12'-0" A.F.G.	4/E7.04, 24/A8.01	6.8 LBS	Silver	Restroom Building
W1-C	Wall Mounted Area Light (RAL)	Same as W1 above, except with custom color finish to match Sherwin Williams SW6971 'Morning Glory; plus surface wiring box cover with machined notch for one 1/2" side entry conduit on each side (three fixtures) and one 1/2" side side entry conduit on one side (one fixture).	21 VA	277 V	Integral 0-10V Dimming to 10%	LED	2187	3000K	80	Exterior	B1-U0-G1	BEGA	#22383-K3-CUS + #SWBC-CUS-[Notches Per Description]	None Known	None Known	Top of Fixture at 11'-4" A.F.G.	4/E7.04	6.8 LBS	Custom Color	Bleacher Canopy
W2-120	Wall Mounted Area Light (Forward Throw, 120V)	"22 386" wall luminaire with asymmetric (forward throw) light distribution, silver finish.	23 VA	120 V	Integral 0-10V Dimming to 10%	LED	2352	3000K	80	Exterior	B1-U0-G1	BEGA	#22386-K3-SLV	None Known	None Known	Bottom of Fixture at 12'-0" A.F.G.	4/E7.04, 24/A8.01	6.8 LBS	Silver	Restroom Building
ZN1-2	30' Event Pole (2 Heads)	"77 653" series compact floodlight heads (quantity 2, each with a 50-degree beam angle and 180-degree glare shield), standard silver finish; plus 29'-8" round tapered steel pole with a fixed base and 2-piece case aluminum base cover, standard silver finish.	108 VA	277 V	Integral 0-10V Dimming to 10%	LED	1,723 lm/head	3000K	80	Exterior	N/A	BEGA	(2) #77653-K3-70758-SLV + #2908SF-SLV	SELUX "Olivio Grande LED - Sistema"	None Known	N/A		N/A	Silver	Pool Deck
ZN1-3	30' Event Pole (3 Heads)	Same as ZN1-2 above, except with three heads.	162 VA	277 V	Integral 0-10V Dimming to 10%	LED	1,723 lm/head	3000K	80	Exterior	N/A	BEGA	(3) #77653-K3-70758-SLV + #2908SF-SLV	SELUX "Olivio Grande LED - Sistema"	None Known	N/A		N/A	Silver	Pool Deck

LIGHTING CONTROL PANEL SCHEDULE LCP-1

Relay Number	Panel	Circuit Number	Load Name	Control Method
1	HLA	3	SIGNAGE (LCP1)	TIME CLOCK/PHOTOCELL
2	HLA	5	BEACON LIGHTING (LCP1)	TIME CLOCK/PHOTOCELL
3	HLA	7	POOL DECK & STORAGE LTG (LCP1)	TIME CLOCK
4	INV1	8	POOL DECK EGRESS LIGHTING (LCP1)	TIME CLOCK/PHOTOCELL
5	INV1	2	OUTDOOR BUILDING LIGHTING (LCP1)	TIME CLOCK/PHOTOCELL
6	INV1	4	CANOPY LIGHTING (LCP1)	TIME CLOCK/PHOTOCELL
7	INV1	5	EGRESS LIGHTING BACK BLEACHERS (LCP1)	TIME CLOCK/PHOTOCELL

LIGHTING CONTROL PANEL SCHEDULE LCP-2

Relay Number	Panel	Circuit Number	Load Name	Control Method
1	INV2	2	EXTERIOR BUILDING LIGHT (LCP2)	TIME CLOCK/PHOTOCELL

LPA

ARCHITECTURE ENGINEERING INTERIORS
LANDSCAPE ARCHITECTURE PLANNING

916-287-2400 Office
916-287-2401 Fax
LPADesignStudios.com

431 I Street,
Suite 107
Sacramento, California 95814

REGISTERED PROFESSIONAL ENGINEER
STEPHEN BAKIN
E-17415
9/30/23
ELECTRICAL
STATE OF CALIFORNIA

This document and all other project documents, ideas, aesthetics and designs incorporated therein are instruments of service. All project documents are copyright protected, are the property of LPA, Inc. (LPA) and cannot be lawfully used in whole or in part for any project or purpose except as set forth in the contractual agreement between LPA and its Client. The unauthorized disclosure and/or use of the project documents (including the creation of derivative works), may give rise to liability for copyright infringement, unlawful disclosure, use or misappropriation of property rights held by LPA. The unauthorized use of the project documents will give rise to the recovery of monetary losses and damages including attorney fees and costs for which the unauthorized user will be held liable.
Project documents describe the design intent of the work and are not a representation of as-built or existing conditions. LPA is not responsible for any discrepancies between the project documents and the existing conditions.

© LPA, Inc.

DAVIS SENIOR HIGH SCHOOL
NEW AQUATICS CENTER
315 W 14TH ST., DAVIS, CA 95616

Developed for
DAVIS JOINT UNIFIED SCHOOL DISTRICT

Revision	Date

Submittal	Date
50% DESIGN DEVELOPMENT	06/15/2021
100% DD SUBMITTAL	07/26/2021
50% CD REVIEW	10/08/2021
100% CD DSA SUBMITTAL	10/22/2021
DSA SUBMITTAL	03/24/2022

Job Number	1904413
Date Published	03/24/2022
Checked By	LPA
Scale	

LIGHTING FIXTURE SCHEDULE

E0.21

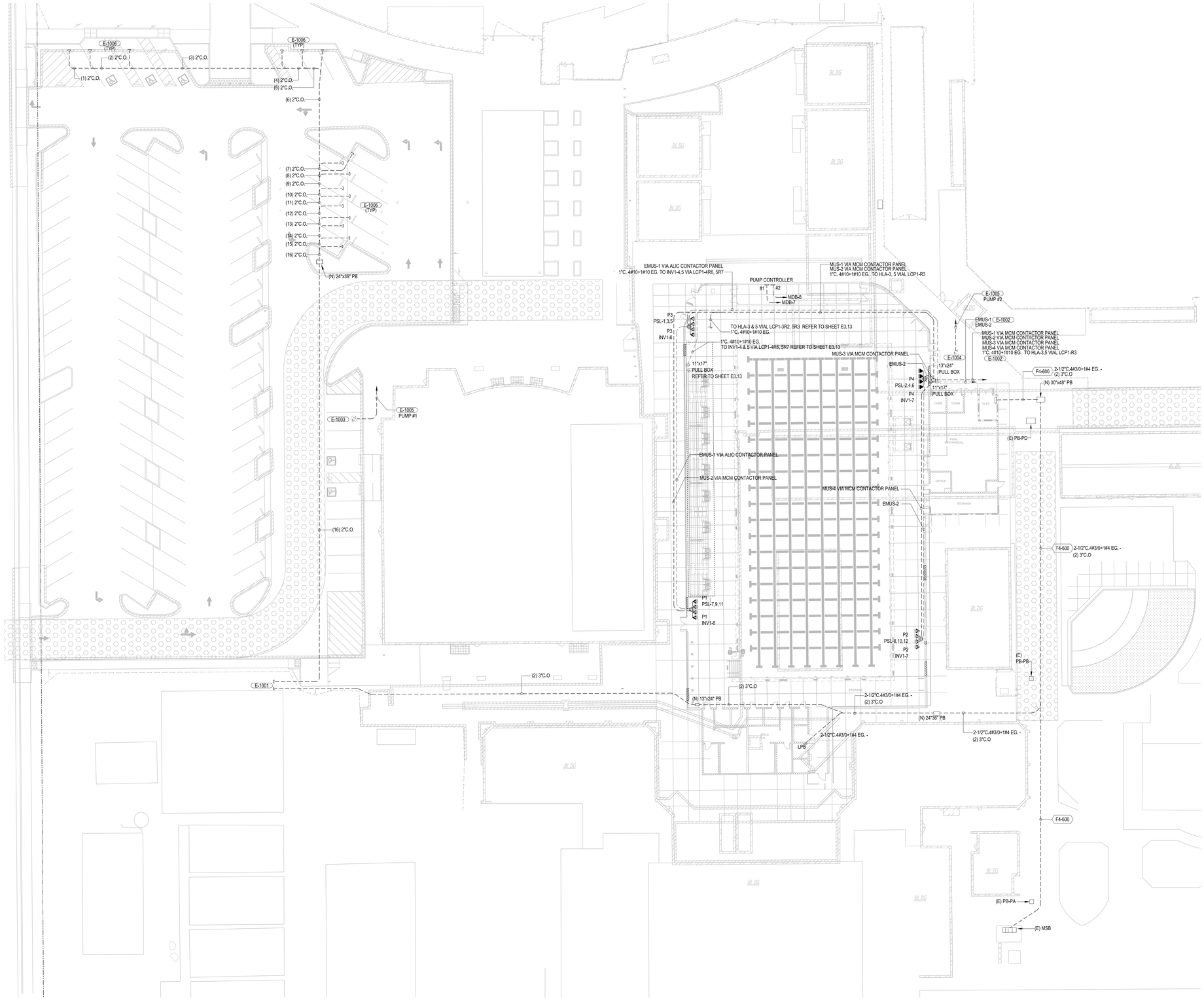

KEYNOTES

- E-1001 FUTURE LOCATION FOR EV PANEL AND EV TRANSFORMER.
- E-1002 REFER TO MUSCO LIGHTING CONTROL SYSTEM SUMMARY DOCUMENT FOR MORE INFORMATION.
- E-1003 480V. 1.5HP, 3PHASE SEWAGE PUMP #1 LOCATION. PROVIDE COMPLETE CONNECTION PER MANUFACTURER GUIDELINES/SHOP DRAWINGS, COORDINATE WIRE SIZE WITH PUMP CONTROL INSTALLER.
- E-1004 480V. 1.5HP, 3PHASE SEWAGE PUMP #2 LOCATION. PROVIDE COMPLETE CONNECTION PER MANUFACTURER GUIDELINES/SHOP DRAWINGS, COORDINATE WIRE SIZE WITH PUMP CONTROL INSTALLER.
- E-1005 1"C. O TO PUMP CONTROLLER. WIRED BY PUMP CONTROL INSTALLER. COORDINATE FEEDER ROUTING WITH CIVIL.
- E-1006 FUTURE EV CHARGE CONNECTION. PROVIDE PULL STRING AND CAP.

IDENTIFICATION STAMP
DIV. OF THE STATE ARCHITECT
APP: 02-119490 INC:
REVIEWED FOR
SS ☑ FLS ☑ ACS ☑
DATE: 09/13/2022

E-1002 MUSCO LIGHTING FEEDER SCHEDULE

FEEDER	CONDUIT/CONDUCTOR	APPROX. LENGHT	V.D %	CKT	POLE	CONTACTOR ID
MUS-1	1"C.2#10+1#10 EG	245'	0.51	PSL-1,3,5	P3	C3
MUS-2	1"C.2#10+1#10 EG	360'	0.76	PSL-7,9,11	P1	C1
MUS-3	1"C.2#10+1#10 EG	60'	0.09	PSL-2,4,6	P4	C4
MUS-4	1"C.2#10+1#10 EG	160'	0.33	PSL-8,10,12	P2	C2

E-1002 MUSCO LIGHTING FEEDER SCHEDULE/EGRESS LIGHTING

FEEDER	CONDUIT/CONDUCTOR	APPROX. LENGHT	V.D %	CKT	POLE	
EMUS-1	1"C.2#10+1#10 EG	360'	1.46	INV1-6	P1/P3	
EMUS-1	1"C.2#10+1#10 EG	160'	.65	INV1-7	P2/P4	

LENGTH BASED ON FURTHEST STATION LOCATION FROM POWER PANEL

GENERAL NOTES

MUSCO LIGHTING DESIGN AND ELECTRICAL LOADS , ARE SHOWN AS AN ALTERNATIVE.

LPA
ARCHITECTURE ENGINEERING INTERIORS
LANDSCAPE ARCHITECTURE PLANNING

916-287-2400 Office

916-287-2401 Fax

LPADesignStudios.com

431 I Street,
Suite 107
Sacramento, California 95814

REGISTERED PROFESSIONAL ENGINEER
STEPHEN BAKER
E-17415
9/30/23
ELECTRICAL
STATE OF CALIFORNIA

This document and all other project documents, ideas, aesthetics and designs incorporated therein are instruments of service. All project documents are copyright protected, are the property of LPA, Inc. (LPA) and cannot be lawfully used in whole or in part for any project or purpose except as set forth in the contractual agreement between LPA and its Client. The unauthorized disclosure and/or use of the project documents (including the creation of derivative works), may give rise to liability for copyright infringement, unlawful disclosure, use or misappropriation of property rights held by LPA. The unauthorized use of the project documents will give rise to the recovery of monetary losses and damages including attorney fees and costs for which the unauthorized user will be held liable.
Project documents describe the design intent of the work and are not a representation of as-built or existing conditions. LPA is not responsible for any discrepancies between the project documents and the existing conditions.

© LPA, Inc.

DAVIS SR HIGH SCHOOL
AQUATICS CENTER
315 W 14TH ST., DAVIS, CA 95616

Developed for
DAVIS JOINT UNIFIED SCHOOL DISTRICT

Revision	Date

Submittal	Date
50% DD REVIEW	06/15/2021
100% DD SUBMITTAL	07/26/2021
50% CD REVIEW	10/08/2021
100% CD DSA SUBMITTAL	10/22/2021
DSA SUBMITTAL	03/24/2022

Job Number	1904413
Date Published	03/24/2022
Checked By	Checker
Scale	AS SHOWN

REMODEL
ELECTRICAL SITE PLAN

E1.01

REMODEL ELECTRICAL SITE PLAN | 1" = 20'-0" | 05

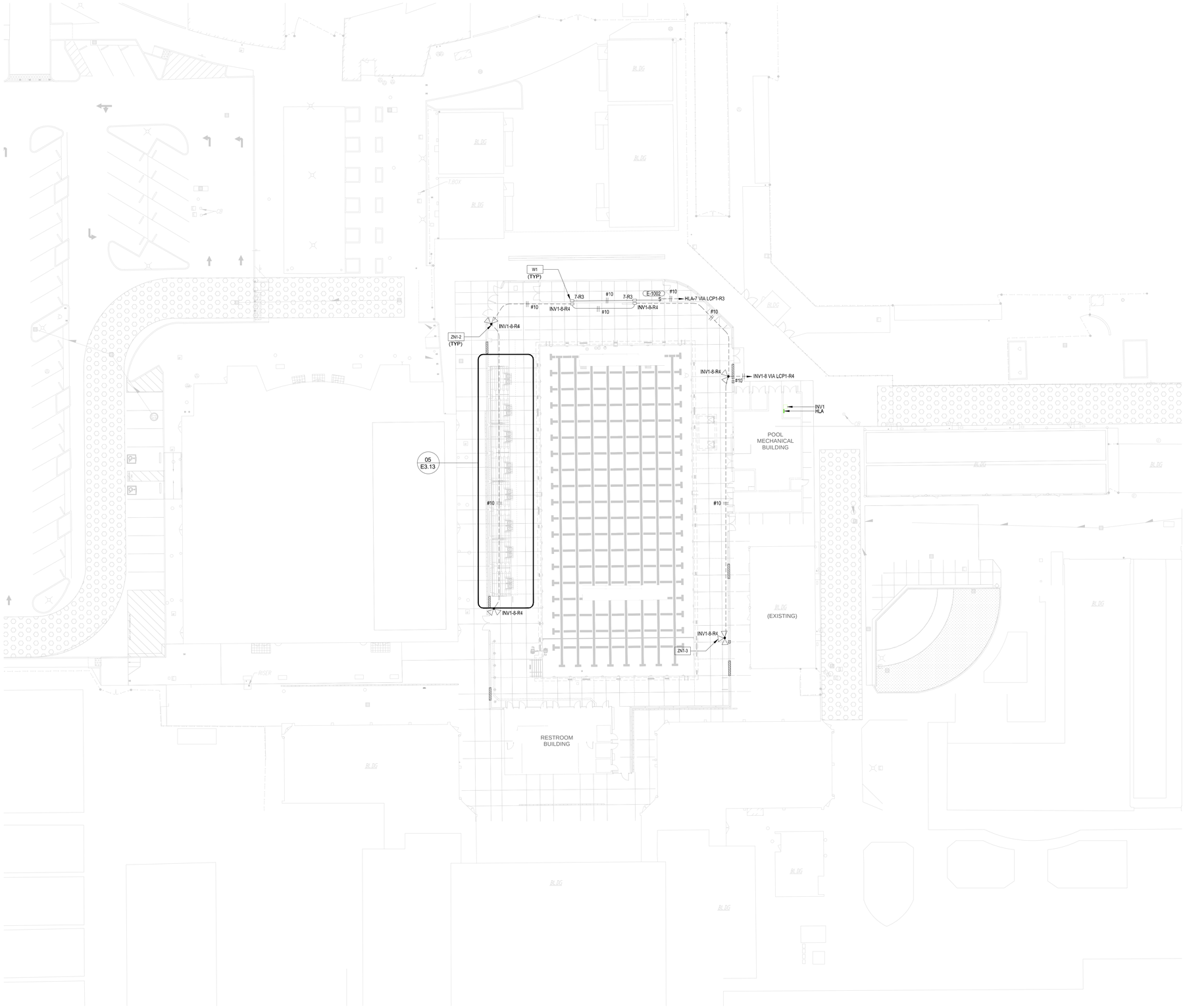

KEYNOTES

E-1002 LIGHTING CONTROL SWITCH IN A WEATHERPROOF SINGLE GANG BOX. LEVITON # WM11-GY OR SIMILAR.

IDENTIFICATION STAMP
DIV. OF THE STATE ARCHITECT
APP: 02-119490 INC:
REVIEWED FOR
SS ☑ FLS ☑ ACS ☑
DATE: 09/13/2022

ARCHITECTURE ENGINEERING INTERIORS
LANDSCAPE ARCHITECTURE PLANNING

916-287-2400 Office

916-287-2401 Fax

LPADesignStudios.com

431 I Street,
Suite 107
Sacramento, California 95814

REGISTERED PROFESSIONAL ENGINEER
STEPHEN BARNES
E-17415
9/30/23
ELECTRICAL
STATE OF CALIFORNIA

This document and all other project documents, ideas, aesthetics and designs incorporated therein are instruments of service. All project documents are copyright protected, are the property of LPA, Inc. (LPA) and cannot be lawfully used in whole or in part for any project or purpose except as set forth in the contractual agreement between LPA and its Client. The unauthorized disclosure and/or use of the project documents (including the creation of derivative works), may give rise to liability for copyright infringement, unlawful disclosure, use or misappropriation of property rights held by LPA. The unauthorized use of the project documents will give rise to the recovery of monetary losses and damages including attorney fees and costs for which the unauthorized user will be held liable.
Project documents describe the design intent of the work and are not a representation of as-built or existing conditions. LPA is not responsible for any discrepancies between the project documents and the existing conditions.

© LPA, Inc.

DAVIS SR HIGH SCHOOL
AQUATICS CENTER
315 W 14TH ST., DAVIS, CA 95616

Developed for
DAVIS JOINT UNIFIED SCHOOL DISTRICT

Revision	Date

Submittal	Date
50% DD REVIEW	06/15/2021
100% DD SUBMITTAL	07/26/2021
50% CD REVIEW	10/08/2021
100% CD DSA SUBMITTAL	10/22/2021
DSA SUBMITTAL	03/24/2022

Job Number	1904413
Date Published	03/24/2022
Checked By	Checker
Scale	AS SHOWN

ELECTRICAL SITE
LIGHTING PLAN

E1.11

ELECTRICAL SITE LIGHTING PLAN | 1" = 20'-0" | 05

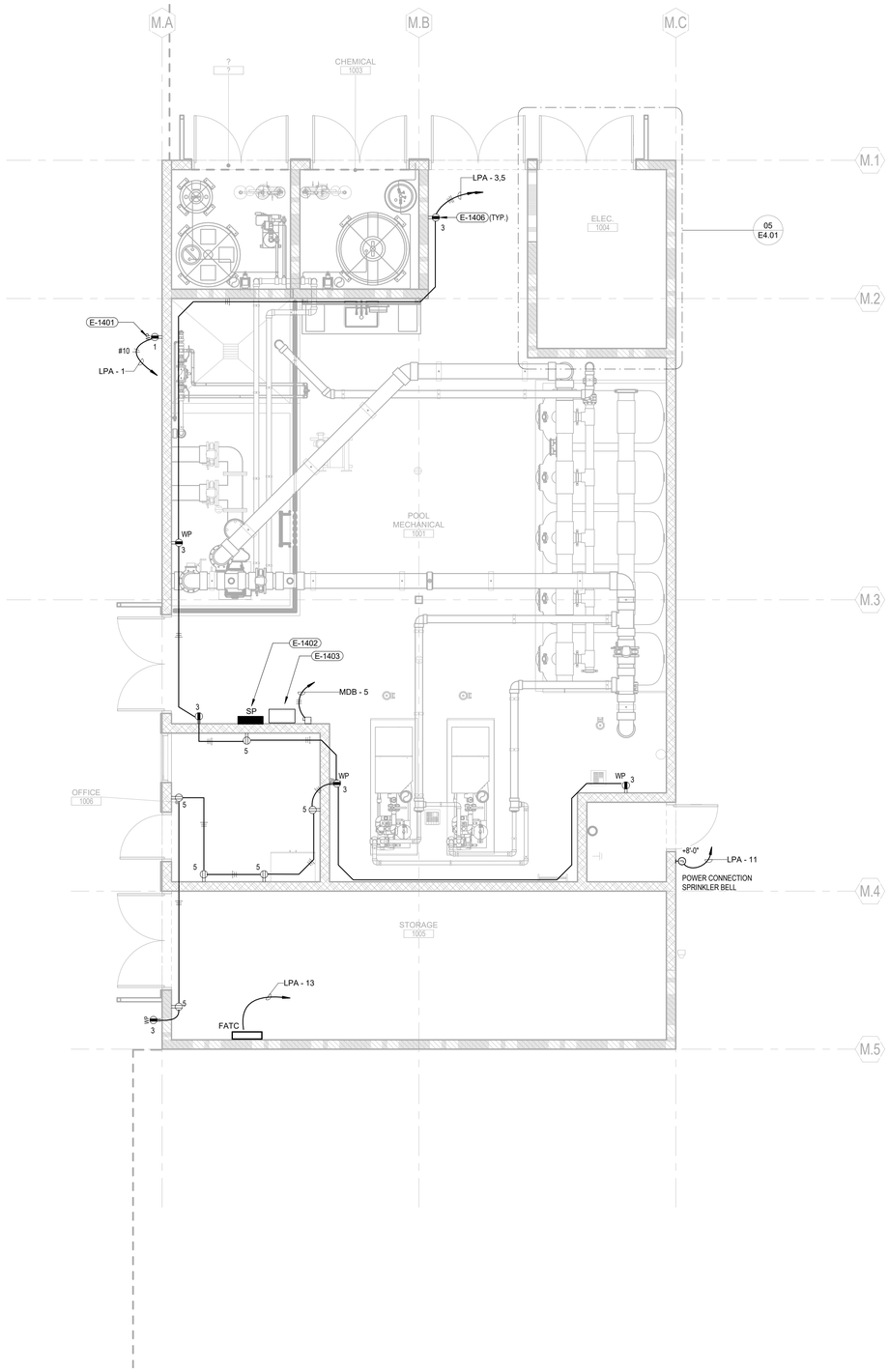

POWER - POOL MECHANICAL BUILDING FLOOR PLAN | 1/4" = 1'-0" | 05

KEYNOTES

ITEM	DESCRIPTION
E-1401	PORTABLE VACUUM PUMP CONNECTION. 2HP 120V. 19.6A . COORDINATE WITH VENDOR NEMA TYPE RECEPTACLE.
E-1402	120/208V 200A PANEL BY POOL CONSULTANT. REFER TO SHEET AQ2.1 NOTE #9
E-1403	SMART PUMP CONTROL SYSTEM. REFER TO SINGLE LINE DIAGRAM FOR DISCONNECT AND WIRE SIZES AND TO POOL CONSULTANT DRAWINGS SHEET AQ2.1 NOTE #2
E-1406	REFERENCE STRUCTURAL DETAIL 03/S6.63FOR MORE INFORMATION FOR CONDUIT RUNNING THROUGH A CMU WALL.

IDENTIFICATION STAMP
DIV. OF THE STATE ARCHITECT
APP: 02-119490 INC:
REVIEWED FOR
SS ☑ FLS ☑ ACS ☑
DATE: 09/13/2022

LEGEND

- METAL STUD WALL CONSTRUCTION
- 1 HOUR RATED METAL STUD WALL CONSTRUCTION
- 1 HOUR RATED METAL STUD WALL CONSTRUCTION
- MASONRY WALL CONSTRUCTION

PLAN NOTES

1. CONTRACTOR TO FIELD VERIFY ALL CONDITIONS PRIOR TO ROUGH-IN.
2. ALL ROUTING SHOWN ON ELECTRICAL DRAWINGS ARE DIAGRAMATIC. CONTRACTOR TO VERIFY IN FIELD EXACT LOCATION OF FINAL ROUTING AND COORDINATE WITH ARCHITECT PRIOR TO INSTALLATION.
3. CONTRACTOR TO VERIFY POWER REQUIREMENTS BEFORE ORDERING ELECTRICAL DEVICES.
4. REFER TO MECHANICAL AND PLUMBING DRAWINGS FOR ADDITIONAL CONNECTION TO CONTROL PANELS, SWITCHES, VALVES, STATS, RALY, ETC. INDICATED ON MECHANICAL CONTROL DIAGRAMS. ELECTRICAL CONTRACTOR SHALL VERIFY FINAL CONTROL WIRING REQUIREMENTS WITH ACTUAL EQUIPMENT TO BE INSTALLED PRIOR TO ANY WORK AND PROVIDE ALL NECESSARY CIRCUITS, DEVICES, AND CONNECTIONS AS REQUIRED.
5. CONTRACTOR SHALL VERIFY ACTUAL MECHANICAL EQUIPMENT TO BE INSTALLED AND PROVIDE FUSED DISCONNECT SWITCHES WHEN SUCH EQUIPMENT U.L. LISTING AND/OR LABELING INDICATED MAXIMUM FUSE FOR EQUIPMENT PROTECTION.
6. IN CORROSIVE ENVIROMENT WIRING METHODS MUST COMPLY WITH NEC 680.14 (A) (B)

KEY PLAN

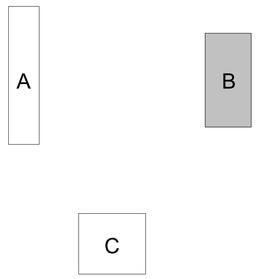

LPA
ARCHITECTURE ENGINEERING INTERIORS
LANDSCAPE ARCHITECTURE PLANNING
916-287-2400 Office
916-287-2401 Fax
LPADesignStudios.com
431 I Street,
Suite 107
Sacramento, California 95814

REGISTERED PROFESSIONAL ENGINEER
STEPHEN BAKER
E-17415
9/30/23
ELECTRICAL
STATE OF CALIFORNIA

This document and all other project documents, ideas, aesthetics and designs incorporated therein are instruments of service. All project documents are copyright protected, are the property of LPA, Inc. (LPA) and cannot be lawfully used in whole or in part for any project or purpose except as set forth in the contractual agreement between LPA and its Client. The unauthorized disclosure and/or use of the project documents (including the creation of derivative works), may give rise to liability for copyright infringement, unlawful disclosure, use or misappropriation of property rights held by LPA. The unauthorized use of the project documents will give rise to the recovery of monetary losses and damages including attorney fees and costs for which the unauthorized user will be held liable.
Project documents describe the design intent of the work and are not a representation of as-built or existing conditions. LPA is not responsible for any discrepancies between the project documents and the existing conditions.

© LPA, Inc.

DAVIS SENIOR HIGH SCHOOL
NEW AQUATICS CENTER
315 W 14TH ST., DAVIS, CA 95616

Developed for
DAVIS JOINT UNIFIED SCHOOL DISTRICT

Revision	Date

Submittal	Date
50% DESIGN DEVELOPMENT	06/15/2021
100% DD SUBMITTAL	07/26/2021
50% CD REVIEW	10/08/2021
100% CD DSA SUBMITTAL	10/22/2021
DSA SUBMITTAL	03/24/2022

Job Number	1904413
Date Published	03/24/2022
Checked By	LPA
Scale	As indicated

ELECTRICAL POWER - POOL MECHANICAL BUILDING FLOOR PLAN

E2.11

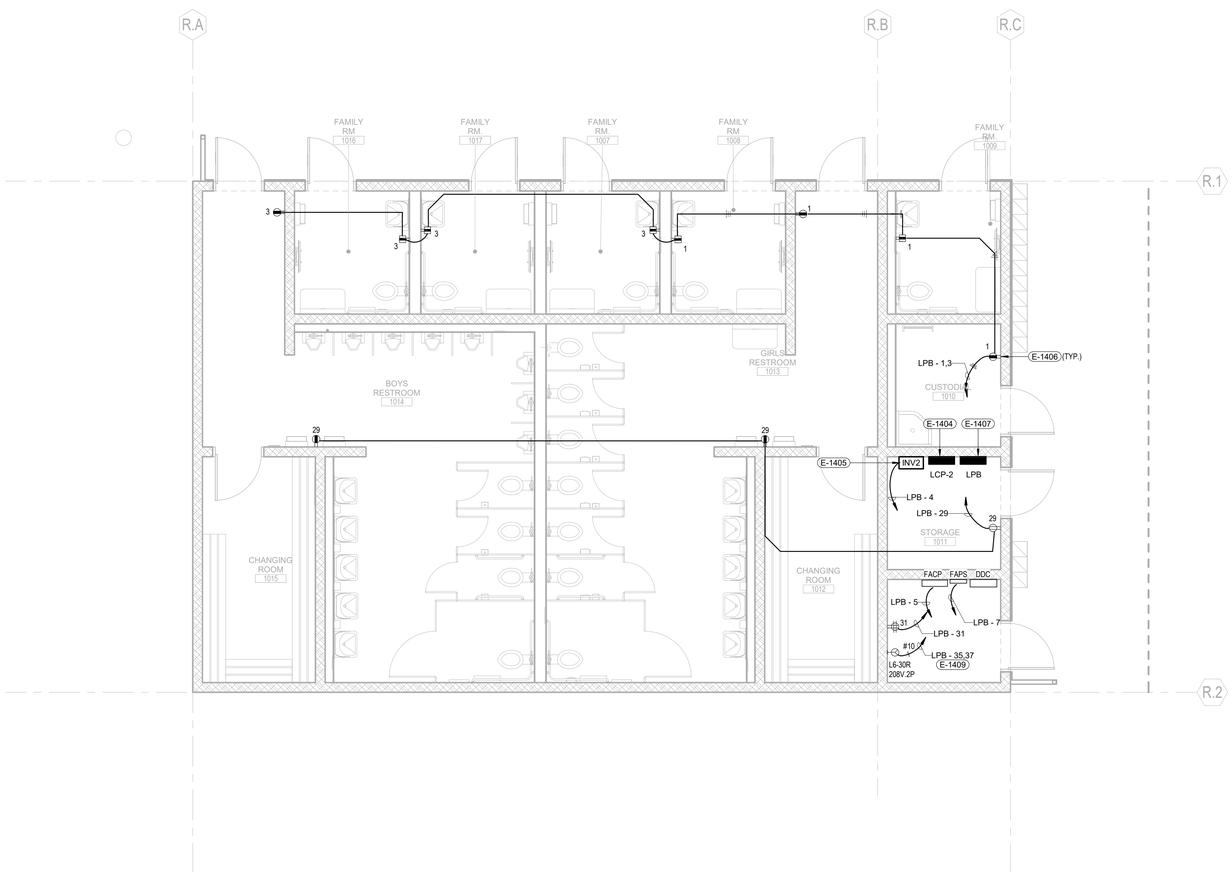

POWER - POOL RESTROOM BUILDING FLOOR PLAN | 1/4" = 1'-0" | 05

KEYNOTES

ITEM	DESCRIPTION
E-1404	NLIGHT ARP 4 RELAY CONTROL PANEL ARP INTENC08NLT-4SPR-MVOLT-SC-SM-DTC.
E-1405	550VA/W MYERS EMERGENCY LIGHTING INVERTER ILLUMINATOR LV. LV-3-W-1B2003-F-LVST.
E-1406	REFERENCE STRUCTURAL DETAIL 03/S6.63FOR MORE INFORMATION FOR CONDUIT RUNNING THROUGH A CMU WALL.
E-1407	REFER TO STRUCTURAL DETAIL 11/S6.91 FOR ANCHORAGE INFORMATION FOR WALL MOUNTED ELECTRICAL EQUIPMENT.
E-1409	COORDINATE WITH USER RECEPTACLE NEMA TYPE BEFORE ORDERING ELECTRICAL DEVICE.

LEGEND

- METAL STUD WALL CONSTRUCTION
- 1 HOUR RATED METAL STUD WALL CONSTRUCTION
- 1 HOUR RATED METAL STUD WALL CONSTRUCTION
- MASONRY WALL CONSTRUCTION

PLAN NOTES

1. CONTRACTOR TO FIELD VERIFY ALL CONDITIONS PRIOR TO ROUGH-IN.
2. ALL ROUTING SHOWN ON ELECTRICAL DRAWINGS ARE DIAGRAMATIC. CONTRACTOR TO VERIFY IN FIELD EXACT LOCATION OF FINAL ROUTING AND COORDINATE WITH ARCHITECT PRIOR TO INSTALLATION.
3. CONTRACTOR TO VERIFY POWER REQUIREMENTS BEFORE ORDERING ELECTRICAL DEVICES.
4. REFER TO MECHANICAL AND PLUMBING DRAWINGS FOR ADDITIONAL CONNECTION TO CONTROL PANELS, SWITCHES, VALVES, STATS, RALY, ETC. INDICATED ON MECHANICAL CONTROL DIAGRAMS. ELECTRICAL CONTRACTOR SHALL VERIFY FINAL CONTROL WIRING REQUIREMENTS WITH ACTUAL EQUIPMENT TO BE INSTALLED PRIOR TO ANY WORK AND PROVIDE ALL NECESSARY CIRCUITS, DEVICES, AND CONNECTIONS AS REQUIRED.
5. CONTRACTOR SHALL VERIFY ACTUAL MECHANICAL EQUIPMENT TO BE INSTALLED AND PROVIDE FUSED DISCONNECT SWITCHES WHEN SUCH EQUIPMENT U.L. LISTING AND/OR LABELING INDICATED MAXIMUM FUSE FOR EQUIPMENT PROTECTION.

KEY PLAN

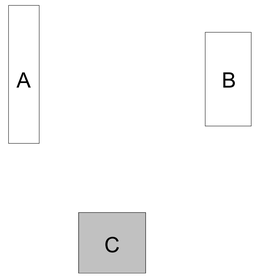

IDENTIFICATION STAMP
DIV. OF THE STATE ARCHITECT
APP: 02-119490 INC:
REVIEWED FOR
SS ☑ FLS ☑ ACS ☑
DATE: 09/13/2022

LPA

ARCHITECTURE ENGINEERING INTERIORS
LANDSCAPE ARCHITECTURE PLANNING

916-287-2400 Office

916-287-2401 Fax

LPADesignStudios.com

431 I Street,
Suite 107
Sacramento, California 95814

REGISTERED PROFESSIONAL ENGINEER
STEPHEN BARR
E-17415
9/30/23
ELECTRICAL
STATE OF CALIFORNIA

This document and all other project documents, ideas, aesthetics and designs incorporated therein are instruments of service. All project documents are copyright protected, are the property of LPA, Inc. (LPA) and cannot be lawfully used in whole or in part for any project or purpose except as set forth in the contractual agreement between LPA and its Client. The unauthorized disclosure and/or use of the project documents (including the creation of derivative works), may give rise to liability for copyright infringement, unlawful disclosure, use or misappropriation of property rights held by LPA. The unauthorized use of the project documents will give rise to the recovery of monetary losses and damages including attorney fees and costs for which the unauthorized user will be held liable.
Project documents describe the design intent of the work and are not a representation of as-built or existing conditions. LPA is not responsible for any discrepancies between the project documents and the existing conditions.

© LPA, Inc.

DAVIS SENIOR HIGH SCHOOL
NEW AQUATICS CENTER
315 W 14TH ST., DAVIS, CA 95616

Developed for
DAVIS JOINT UNIFIED SCHOOL DISTRICT

Revision	Date

Submittal	Date
50% DESIGN DEVELOPMENT	06/15/2021
100% DD SUBMITTAL	07/26/2021
50% CD REVIEW	10/08/2021
100% CD DSA SUBMITTAL	10/22/2021
DSA SUBMITTAL	02/24/2022

Job Number	1904413
Date Published	03/24/2022
Checked By	LPA
Scale	As indicated

ELECTRICAL POWER - POOL RESTROOM BUILDING FLOOR PLAN

E2.12

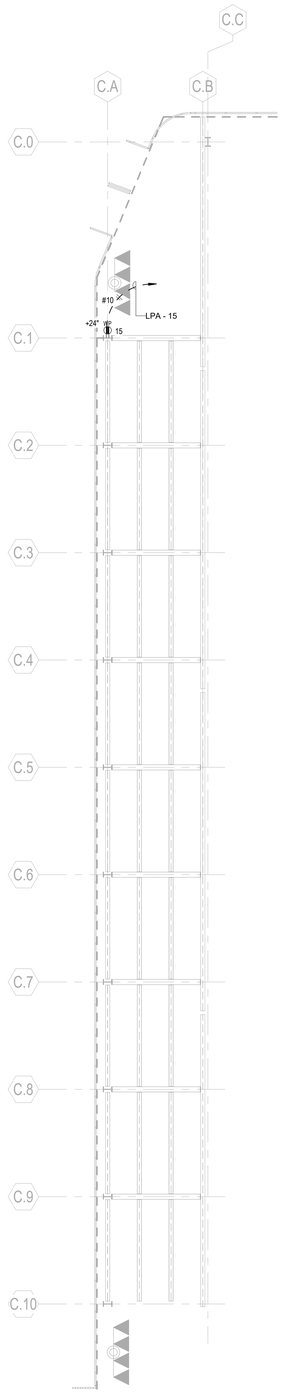

POWER - CANOPY FLOOR PLAN | 1/8" = 1'-0" | 05

KEYNOTES

ITEM	DESCRIPTION

IDENTIFICATION STAMP
DIV. OF THE STATE ARCHITECT
APP: 02-119490 INC:
REVIEWED FOR
SS ☑ FLS ☑ ACS ☑
DATE: 09/13/2022

LEGEND

- METAL STUD WALL CONSTRUCTION
- 1 HOUR RATED METAL STUD WALL CONSTRUCTION
- 1 HOUR RATED METAL STUD WALL CONSTRUCTION
- MASONRY WALL CONSTRUCTION

PLAN NOTES

1. CONTRACTOR TO FIELD VERIFY ALL CONDITIONS PRIOR TO ROUGH-IN.
2. ALL ROUTING SHOWN ON ELECTRICAL DRAWINGS ARE DIAGRAMATIC. CONTRACTOR TO VERIFY IN FIELD EXACT LOCATION OF FINAL ROUTING AND COORDINATE WITH ARCHITECT PRIOR TO INSTALLATION.
3. CONTRACTOR TO VERIFY POWER REQUIREMENTS BEFORE ORDERING ELECTRICAL DEVICES.
4. REFER TO MECHANICAL AND PLUMBING DRAWINGS FOR ADDITIONAL CONNECTION TO CONTROL PANELS, SWITCHES, VALVES, STATS, RALY, ETC. INDICATED ON MECHANICAL CONTROL DIAGRAMS. ELECTRICAL CONTRACTOR SHALL VERIFY FINAL CONTROL WIRING REQUIREMENTS WITH ACTUAL EQUIPMENT TO BE INSTALLED PRIOR TO ANY WORK AND PROVIDE ALL NECESSARY CIRCUITS, DEVICES, AND CONNECTIONS AS REQUIRED.
5. CONTRACTOR SHALL VERIFY ACTUAL MECHANICAL EQUIPMENT TO BE INSTALLED AND PROVIDE FUSED DISCONNECT SWITCHES WHEN SUCH EQUIPMENT U.L. LISTING AND/OR LABELING INDICATED MAXIMUM FUSE FOR EQUIPMENT PROTECTION.

KEY PLAN

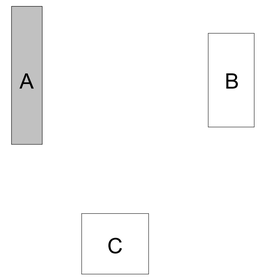

LPA
ARCHITECTURE ENGINEERING INTERIORS
LANDSCAPE ARCHITECTURE PLANNING

916-287-2400 Office
916-287-2401 Fax
LPADesignStudios.com
431 I Street,
Suite 107
Sacramento, California 95814

REGISTERED PROFESSIONAL ENGINEER
STEPHEN BAKER
E-17415
9/30/23
ELECTRICAL
STATE OF CALIFORNIA

This document and all other project documents, ideas, aesthetics and designs incorporated therein are instruments of service. All project documents are copyright protected, are the property of LPA, Inc. (LPA) and cannot be lawfully used in whole or in part for any project or purpose except as set forth in the contractual agreement between LPA and its Client. The unauthorized disclosure and/or use of the project documents (including the creation of derivative works), may give rise to liability for copyright infringement, unlawful disclosure, use or misappropriation of property rights held by LPA. The unauthorized use of the project documents will give rise to the recovery of monetary losses and damages including attorney fees and costs for which the unauthorized user will be held liable.
Project documents describe the design intent of the work and are not a representation of as-built or existing conditions. LPA is not responsible for any discrepancies between the project documents and the existing conditions.

© LPA, Inc.

DAVIS SENIOR HIGH SCHOOL
NEW AQUATICS CENTER
315 W 14TH ST., DAVIS, CA 95616

Developed for
DAVIS JOINT UNIFIED SCHOOL DISTRICT

Revision	Date

Submittal	Date
50% DESIGN DEVELOPMENT	06/15/2021
100% DD SUBMITTAL	07/26/2021
50% CD REVIEW	10/08/2021
100% CD DSA SUBMITTAL	10/22/2021
DSA SUBMITTAL	03/24/2022

Job Number	1904413
Date Published	03/24/2022
Checked By	LPA
Scale	1/8" = 1'-0"

ELECTRICAL
POWER - CANOPY
FLOOR PLAN

E2.13

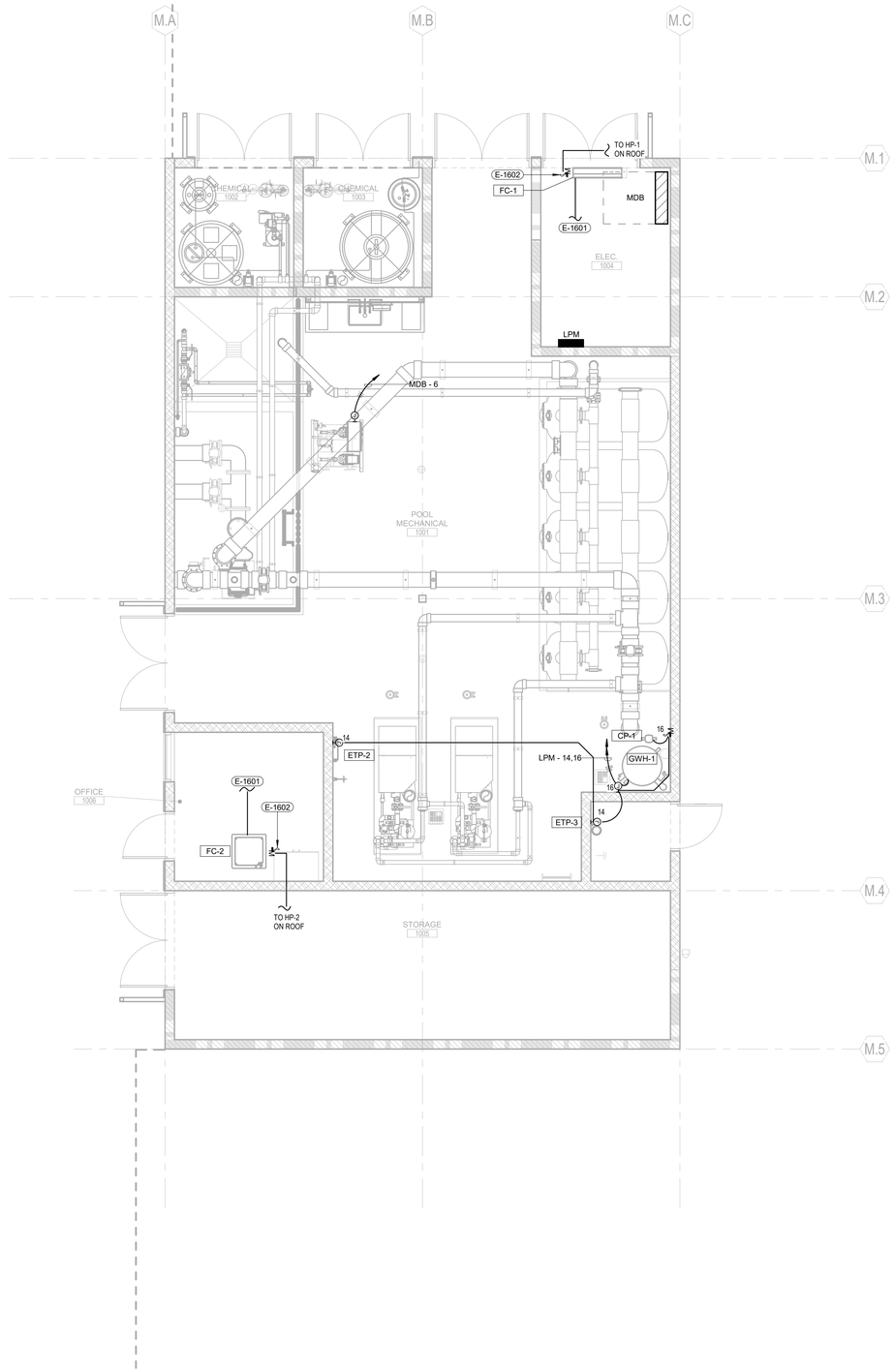

KEYNOTES

ITEM	DESCRIPTION
E-1601	PROVIDE 3/4" CONDUIT FOR CONTROL CONNECTION. REFER TO MECHANICAL DRAWING FOR EXACT CONTROL LOCATION AND COORDINATE WITH MECHANICAL CONTROL CONTRACTOR.
E-1602	FC UNIT POWERED BY OUTDOOR UNIT. PROVIDE 208V/2P MOTOR TOGGLE SWITCH.

IDENTIFICATION STAMP
DIV. OF THE STATE ARCHITECT
APP: 02-119490 INC:
REVIEWED FOR
SS ☑ FLS ☑ ACS ☑
DATE: 09/13/2022

LEGEND

- METAL STUD WALL CONSTRUCTION
- 1 HOUR RATED METAL STUD WALL CONSTRUCTION
- 1 HOUR RATED METAL STUD WALL CONSTRUCTION
- MASONRY WALL CONSTRUCTION

PLAN NOTES

1. CONTRACTOR TO FIELD VERIFY ALL CONDITIONS PRIOR TO ROUGH-IN.
2. ALL ROUTING SHOWN ON ELECTRICAL DRAWINGS ARE DIAGRAMATIC. CONTRACTOR TO VERIFY IN FIELD EXACT LOCATION OF FINAL ROUTING AND COORDINATE WITH ARCHITECT PRIOR TO INSTALLATION.
3. CONTRACTOR TO VERIFY POWER REQUIREMENTS BEFORE ORDERING ELECTRICAL DEVICES.
4. REFER TO MECHANICAL AND PLUMBING DRAWINGS FOR ADDITIONAL CONNECTION TO CONTROL PANELS, SWITCHES, VALVES, STATS, RALY, ETC. INDICATED ON MECHANICAL CONTROL DIAGRAMS. ELECTRICAL CONTRACTOR SHALL VERIFY FINAL CONTROL WIRING REQUIREMENTS WITH ACTUAL EQUIPMENT TO BE INSTALLED PRIOR TO ANY WORK AND PROVIDE ALL NECESSARY CIRCUITS, DEVICES, AND CONNECTIONS AS REQUIRED.
5. CONTRACTOR SHALL VERIFY ACTUAL MECHANICAL EQUIPMENT TO BE INSTALLED AND PROVIDE FUSED DISCONNECT SWITCHES WHEN SUCH EQUIPMENT U.L. LISTING AND/OR LABELING INDICATED MAXIMUM FUSE FOR EQUIPMENT PROTECTION.

KEY PLAN

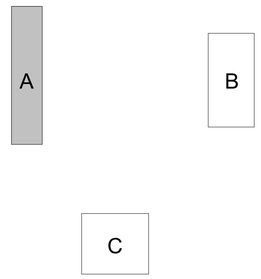

POWER/MECH - POOL MECHANICAL BUILDING FLOOR PLAN 1/4" = 1'-0" 05

LPA
ARCHITECTURE ENGINEERING INTERIORS
LANDSCAPE ARCHITECTURE PLANNING
916-287-2400 Office
916-287-2401 Fax
LPADesignStudios.com
431 I Street,
Suite 107
Sacramento, California 95814

REGISTERED PROFESSIONAL ENGINEER
STEPHEN BAKER
E-17415
9/30/23
ELECTRICAL
STATE OF CALIFORNIA

This document and all other project documents, ideas, aesthetics and designs incorporated therein are instruments of service. All project documents are copyright protected, are the property of LPA, Inc. (LPA) and cannot be lawfully used in whole or in part for any project or purpose except as set forth in the contractual agreement between LPA and its Client. The unauthorized disclosure and/or use of the project documents (including the creation of derivative works), may give rise to liability for copyright infringement, unlawful disclosure, use or misappropriation of property rights held by LPA. The unauthorized use of the project documents will give rise to the recovery of monetary losses and damages including attorney fees and costs for which the unauthorized user will be held liable.
Project documents describe the design intent of the work and are not a representation of as-built or existing conditions. LPA is not responsible for any discrepancies between the project documents and the existing conditions.

© LPA, Inc.

DAVIS SENIOR HIGH SCHOOL
NEW AQUATICS CENTER
315 W 14TH ST., DAVIS, CA 95616

Developed for
DAVIS JOINT UNIFIED SCHOOL DISTRICT

Revision	Date

Submittal	Date
50% DESIGN DEVELOPMENT	06/15/2021
100% DD SUBMITTAL	07/26/2021
50% CD REVIEW	10/08/2021
100% CD DSA SUBMITTAL	10/22/2021
DSA SUBMITTAL	03/24/2022

Job Number	1904413
Date Published	03/24/2022
Checked By	LPA
Scale	As indicated

ELECTRICAL
POWER/MECH -
POOL MECHANICAL
BUILDING FLOOR
PLAN

E2.21

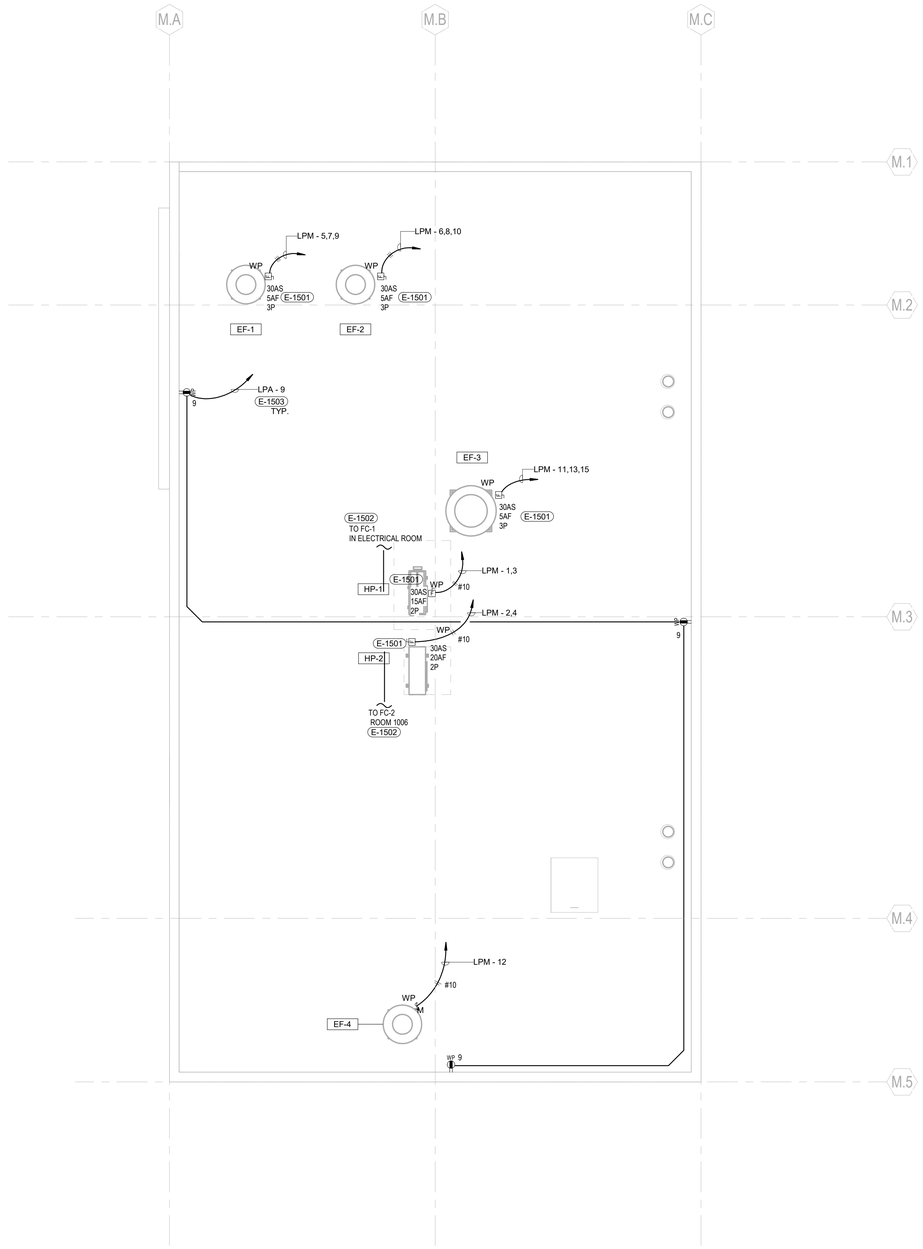

POWER/MECH - POOL MECHANICAL BUILDING ROOF PLAN 1/4" = 1'-0" 05

KEYNOTES

ITEM	DESCRIPTION
E-1501	FUSE PER MANUFACTURER NAME PLATE.
E-1502	PROVIDE AND INSTALL 3/4"C. AND WIRES PER MANUFACTURER REQUIREMENT BETWEEN HP-UNIT AND FC-UNIT VIA MOTOR RATED TOGGLE SWITCH. ROUTE ELECTRICAL CIRCUIT IN SAME CHASE AS CONDENSATE LINES AS POSSIBLE. COORDINATE WITH MECHANICAL CONTRACTOR.
E-1503	CONDUITS RUNS UNDER THE ROOF DECK WHERE IS POSSIBLE. REFER TO 03/E7.03 & 04/E7.03 FOR DETAILS.

IDENTIFICATION STAMP
DIV. OF THE STATE ARCHITECT
APP: 02-119490 INC:
REVIEWED FOR
SS ☑ FLS ☑ ACS ☑
DATE: 09/13/2022

LEGEND

- METAL STUD WALL CONSTRUCTION
- 1 HOUR RATED METAL STUD WALL CONSTRUCTION
- 1 HOUR RATED METAL STUD WALL CONSTRUCTION
- MASONRY WALL CONSTRUCTION

PLAN NOTES

1. CONTRACTOR TO FIELD VERIFY ALL CONDITIONS PRIOR TO ROUGH-IN.
2. ALL ROUTING SHOWN ON ELECTRICAL DRAWINGS ARE DIAGRAMATIC. CONTRACTOR TO VERIFY IN FIELD EXACT LOCATION OF FINAL ROUTING AND COORDINATE WITH ARCHITECT PRIOR TO INSTALLATION.
3. CONTRACTOR TO VERIFY POWER REQUIREMENTS BEFORE ORDERING ELECTRICAL DEVICES.
4. REFER TO MECHANICAL AND PLUMBING DRAWINGS FOR ADDITIONAL CONNECTION TO CONTROL PANELS, SWITCHES, VALVES, STATS, RALY, ETC. INDICATED ON MECHANICAL CONTROL DIAGRAMS. ELECTRICAL CONTRACTOR SHALL VERIFY FINAL CONTROL WIRING REQUIREMENTS WITH ACTUAL EQUIPMENT TO BE INSTALLED PRIOR TO ANY WORK AND PROVIDE ALL NECESSARY CIRCUITS, DEVICES, AND CONNECTIONS AS REQUIRED.
5. CONTRACTOR SHALL VERIFY ACTUAL MECHANICAL EQUIPMENT TO BE INSTALLED AND PROVIDE FUSED DISCONNECT SWITCHES WHEN SUCH EQUIPMENT U.L. LISTING AND/OR LABELING INDICATED MAXIMUM FUSE FOR EQUIPMENT PROTECTION.

KEY PLAN

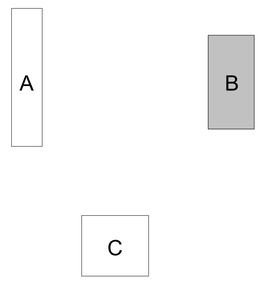

LPA
ARCHITECTURE ENGINEERING INTERIORS
LANDSCAPE ARCHITECTURE PLANNING

916-287-2400 Office
916-287-2401 Fax
LPADesignStudios.com
431 I Street,
Suite 107
Sacramento, California 95814

REGISTERED PROFESSIONAL ENGINEER
STEPHEN BAKER
E-17415
9/30/23
ELECTRICAL
STATE OF CALIFORNIA

This document and all other project documents, ideas, aesthetics and designs incorporated therein are instruments of service. All project documents are copyright protected, are the property of LPA, Inc. (LPA) and cannot be lawfully used in whole or in part for any project or purpose except as set forth in the contractual agreement between LPA and its Client. The unauthorized disclosure and/or use of the project documents (including the creation of derivative works), may give rise to liability for copyright infringement, unlawful disclosure, use or misappropriation of property rights held by LPA. The unauthorized use of the project documents will give rise to the recovery of monetary losses and damages including attorney fees and costs for which the unauthorized user will be held liable.
Project documents describe the design intent of the work and are not a representation of as-built or existing conditions. LPA is not responsible for any discrepancies between the project documents and the existing conditions.

© LPA, Inc.

DAVIS SENIOR HIGH SCHOOL
NEW AQUATICS CENTER
315 W 14TH ST., DAVIS, CA 95616

Developed for
DAVIS JOINT UNIFIED SCHOOL DISTRICT

Revision	Date

Submittal	Date
50% DESIGN DEVELOPMENT	06/15/2021
100% DD SUBMITTAL	07/26/2021
50% CD REVIEW	10/08/2021
100% CD DSA SUBMITTAL	10/22/2021
DSA SUBMITTAL	03/24/2022

Job Number	1904413
Date Published	03/24/2022
Checked By	LPA
Scale	As indicated

ELECTRICAL POWER/MECH - POOL MECHANICAL BLDG. ROOF PLAN

E2.22

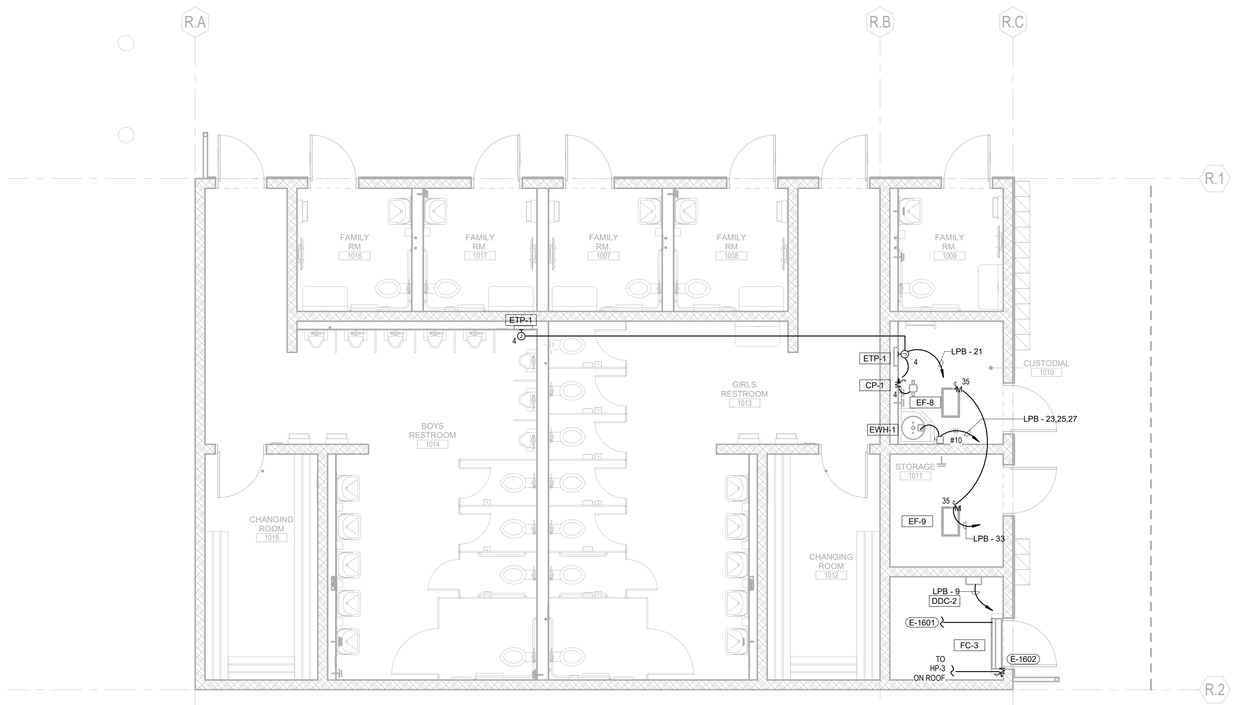

POWER /MECH POOL RESTROOM BUILDING FLOOR PLAN | 1/4" = 1'-0" | 05

KEYNOTES

ITEM	DESCRIPTION
E-1601	PROVIDE 3/4" CONDUIT FOR CONTROL CONNECTION. REFER TO MECHANICAL DRAWING FOR EXACT CONTROL LOCATION AND COORDINATE WITH MECHANICAL CONTROL CONTRACTOR.
E-1602	FC UNIT POWERED BY OUTDOOR UNIT. PROVIDE 208V/2P MOTOR TOGGLE SWITCH.

LEGEND

- METAL STUD WALL CONSTRUCTION
- 1 HOUR RATED METAL STUD WALL CONSTRUCTION
- 1 HOUR RATED METAL STUD WALL CONSTRUCTION
- MASONRY WALL CONSTRUCTION

PLAN NOTES

1. CONTRACTOR TO FIELD VERIFY ALL CONDITIONS PRIOR TO ROUGH-IN.
2. ALL ROUTING SHOWN ON ELECTRICAL DRAWINGS ARE DIAGRAMATIC. CONTRACTOR TO VERIFY IN FIELD EXACT LOCATION OF FINAL ROUTING AND COORDINATE WITH ARCHITECT PRIOR TO INSTALLATION.
3. CONTRACTOR TO VERIFY POWER REQUIREMENTS BEFORE ORDERING ELECTRICAL DEVICES.
4. REFER TO MECHANICAL AND PLUMBING DRAWINGS FOR ADDITIONAL CONNECTION TO CONTROL PANELS, SWITCHES, VALVES, STATS, RALY, ETC. INDICATED ON MECHANICAL CONTROL DIAGRAMS. ELECTRICAL CONTRACTOR SHALL VERIFY FINAL CONTROL WIRING REQUIREMENTS WITH ACTUAL EQUIPMENT TO BE INSTALLED PRIOR TO ANY WORK AND PROVIDE ALL NECESSARY CIRCUITS, DEVICES, AND CONNECTIONS AS REQUIRED.
5. CONTRACTOR SHALL VERIFY ACTUAL MECHANICAL EQUIPMENT TO BE INSTALLED AND PROVIDE FUSED DISCONNECT SWITCHES WHEN SUCH EQUIPMENT U.L. LISTING AND/OR LABELING INDICATED MAXIMUM FUSE FOR EQUIPMENT PROTECTION.

KEY PLAN

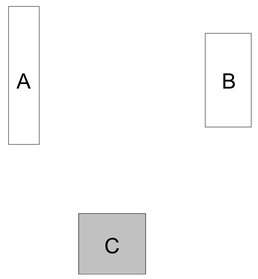

IDENTIFICATION STAMP
DIV. OF THE STATE ARCHITECT
APP: 02-119490 INC:
REVIEWED FOR
SS ☑ FLS ☑ ACS ☑
DATE: 09/13/2022

LPA
ARCHITECTURE ENGINEERING INTERIORS
LANDSCAPE ARCHITECTURE PLANNING

916-287-2400 Office
916-287-2401 Fax
LPADesignStudios.com
431 I Street,
Suite 107
Sacramento, California 95814

REGISTERED PROFESSIONAL ENGINEER
STEPHEN BARR
E-17415
9/30/23
ELECTRICAL
STATE OF CALIFORNIA

This document and all other project documents, ideas, aesthetics and designs incorporated therein are instruments of service. All project documents are copyright protected, are the property of LPA, Inc. (LPA) and cannot be lawfully used in whole or in part for any project or purpose except as set forth in the contractual agreement between LPA and its Client. The unauthorized disclosure and/or use of the project documents (including the creation of derivative works), may give rise to liability for copyright infringement, unlawful disclosure, use or misappropriation of property rights held by LPA. The unauthorized use of the project documents will give rise to the recovery of monetary losses and damages including attorney fees and costs for which the unauthorized user will be held liable.
Project documents describe the design intent of the work and are not a representation of as-built or existing conditions. LPA is not responsible for any discrepancies between the project documents and the existing conditions.

© LPA, Inc.

DAVIS SENIOR HIGH SCHOOL
NEW AQUATICS CENTER
315 W 14TH ST., DAVIS, CA 95616

Developed for
DAVIS JOINT UNIFIED SCHOOL DISTRICT

Revision	Date

Submittal	Date
50% DESIGN DEVELOPMENT	06/15/2021
100% DD SUBMITTAL	07/26/2021
50% CD REVIEW	10/08/2021
100% CD DSA SUBMITTAL	10/22/2021
DSA SUBMITTAL	09/24/2022

Job Number	1904413
Date Published	03/24/2022
Checked By	LPA
Scale	As indicated

ELECTRICAL POWER/MECH - POOL RESTROOM BUILDING FLOOR PLAN

E2.23

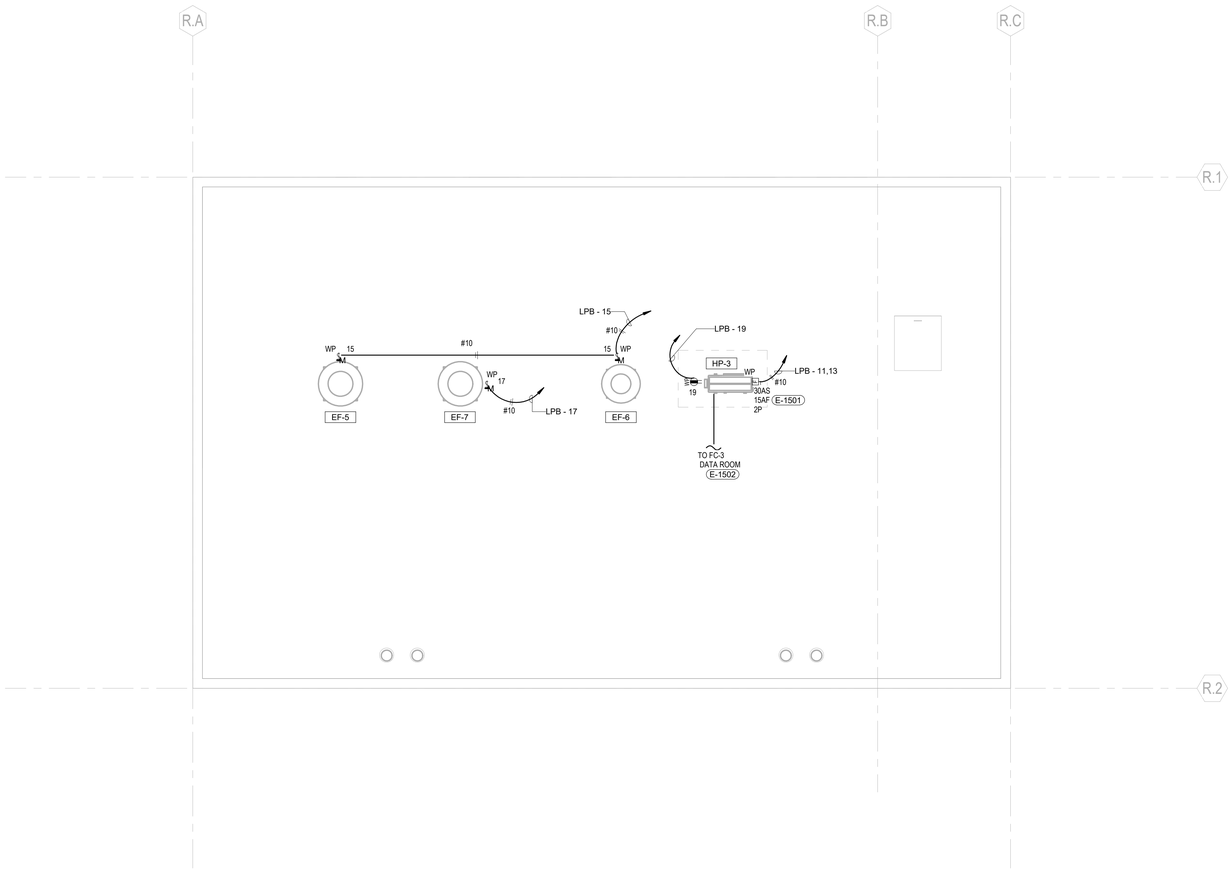

KEYNOTES

ITEM	DESCRIPTION
E-1501	FUSE PER MANUFACTURER NAME PLATE.
E-1502	PROVIDE AND INSTALL 3/4"C. AND WIRES PER MANUFACTURER REQUIREMENT BETWEEN HP-UNIT AND FC-UNIT VIA MOTOR RATED TOGGLE SWITCH. ROUTE ELECTRICAL CIRCUIT IN SAME CHASE AS CONDENSATE LINES AS POSSIBLE. COORDINATE WITH MECHANICAL CONTRACTOR.

IDENTIFICATION STAMP
DIV. OF THE STATE ARCHITECT
APP: 02-119490 INC:
REVIEWED FOR
SS ☑ FLS ☑ ACS ☑
DATE: 09/13/2022

LEGEND

- METAL STUD WALL CONSTRUCTION
- 1 HOUR RATED METAL STUD WALL CONSTRUCTION
- 1 HOUR RATED METAL STUD WALL CONSTRUCTION
- MASONRY WALL CONSTRUCTION

PLAN NOTES

1. CONTRACTOR TO FIELD VERIFY ALL CONDITIONS PRIOR TO ROUGH-IN.
2. ALL ROUTING SHOWN ON ELECTRICAL DRAWINGS ARE DIAGRAMATIC. CONTRACTOR TO VERIFY IN FIELD EXACT LOCATION OF FINAL ROUTING AND COORDINATE WITH ARCHITECT PRIOR TO INSTALLATION.
3. CONTRACTOR TO VERIFY POWER REQUIREMENTS BEFORE ORDERING ELECTRICAL DEVICES.
4. REFER TO MECHANICAL AND PLUMBING DRAWINGS FOR ADDITIONAL CONNECTION TO CONTROL PANELS, SWITCHES, VALVES, STATS, RALY, ETC. INDICATED ON MECHANICAL CONTROL DIAGRAMS. ELECTRICAL CONTRACTOR SHALL VERIFY FINAL CONTROL WIRING REQUIREMENTS WITH ACTUAL EQUIPMENT TO BE INSTALLED PRIOR TO ANY WORK AND PROVIDE ALL NECESSARY CIRCUITS, DEVICES, AND CONNECTIONS AS REQUIRED.
5. CONTRACTOR SHALL VERIFY ACTUAL MECHANICAL EQUIPMENT TO BE INSTALLED AND PROVIDE FUSED DISCONNECT SWITCHES WHEN SUCH EQUIPMENT U.L. LISTING AND/OR LABELING INDICATED MAXIMUM FUSE FOR EQUIPMENT PROTECTION.

KEY PLAN

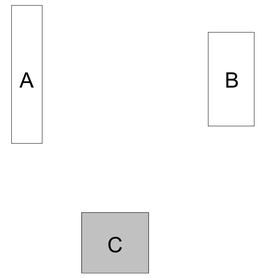

LPA
ARCHITECTURE ENGINEERING INTERIORS
LANDSCAPE ARCHITECTURE PLANNING

916-287-2400 Office
916-287-2401 Fax
LPADesignStudios.com
431 I Street,
Suite 107
Sacramento, California 95814

REGISTERED PROFESSIONAL ENGINEER
STEPHEN BARNES
E-17415
9/30/23
ELECTRICAL
STATE OF CALIFORNIA

This document and all other project documents, ideas, aesthetics and designs incorporated therein are instruments of service. All project documents are copyright protected, are the property of LPA, Inc. (LPA) and cannot be lawfully used in whole or in part for any project or purpose except as set forth in the contractual agreement between LPA and its Client. The unauthorized disclosure and/or use of the project documents (including the creation of derivative works), may give rise to liability for copyright infringement, unlawful disclosure, use or misappropriation of property rights held by LPA. The unauthorized use of the project documents will give rise to the recovery of monetary losses and damages including attorney fees and costs for which the unauthorized user will be held liable.
Project documents describe the design intent of the work and are not a representation of as-built or existing conditions. LPA is not responsible for any discrepancies between the project documents and the existing conditions.

© LPA, Inc.

DAVIS SENIOR HIGH SCHOOL
NEW AQUATICS CENTER
315 W 14TH ST., DAVIS, CA 95616

Developed for
DAVIS JOINT UNIFIED SCHOOL DISTRICT

Revision	Date

Submittal	Date
50% DESIGN DEVELOPMENT	06/15/2021
100% DD SUBMITTAL	07/26/2021
50% CD REVIEW	10/08/2021
100% CD DSA SUBMITTAL	10/22/2021
DSA SUBMITTAL	03/24/2022

Job Number	1904413
Date Published	03/24/2022
Checked By	LPA
Scale	As indicated

ELECTRICAL POWER/MECH - POOL RESTROOM BUILDING ROOF PLAN

E2.24

POWER/MECH - POOL RESTROOM BUILDING ROOF PLAN 1/4" = 1'-0" 05

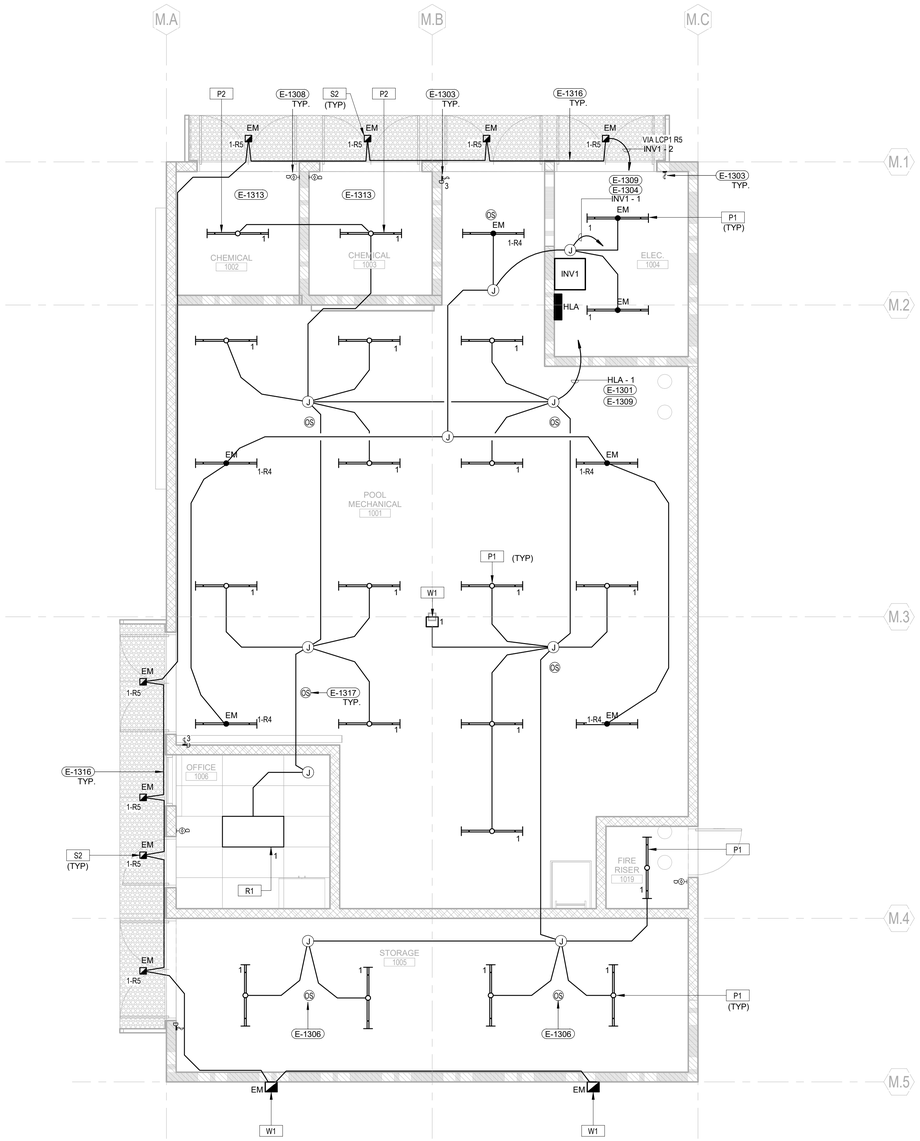

KEYNOTES

ITEM	DESCRIPTION
E-1301	CONTRACTOR TO PROVIDE NLIGHT POWER-RELAY PACK (NPP16D) AS REQUIRED TO INTERFACE WITH LIGHTING FIXTURES AND LIGHTING CONTROL DEVICES. REFER TO MANUFACTURER SHOP DRAWINGS AND SHEET E6.01 FOR TYPICAL DETAILS AND DIAGRAMS.
E-1303	NLIGHT NPODMA WALLPOD ON/OFF REFER TO MANUFACTURER SHOP DRAWINGS
E-1304	CONTRACTOR TO PROVIDE NLIGHT EMERGENCY POWER-RELAY PACK (NPP16D-ER-EFP) AS REQUIRED TO INTERFACE WITH LIGHTING FIXTURES AND LIGHTING CONTROL DEVICES. PROVIDE UNSWITCHED LIGHTING CIRCUIT FOR SENSING. REFER TO MANUFACTURER SHOP DRAWINGS AND SHEET E6.01 FOR TYPICAL DETAILS AND DIAGRAMS.
E-1306	NLIGHT CEILING MOUNT OCCUPANCY-VACCANCY SENSOR NCM PDT-9-RGB. REFER TO MANUFACTURER SHOP DRAWINGS AND SHEET E6.01 FOR TYPICAL DETAILS AND DIAGRAMS.
E-1308	NLIGHT NWSXA PDT LV DX. REFER TO MANUFACTURER SHOP DRAWINGS
E-1309	CONTRACTOR TO PROVIDE UNSWITCHED LIGHTING CIRCUIT TO FEED LIGHTING FIXTURES WHEN THE LIGHTING CIRCUIT IS SHARING OTHER ROOMS. TYPICAL THROUGHOUT THE PROJECT.
E-1313	EXPOSED CONDUITS IN CORROSIVE ENVIRONMENTS SHALL BE PROVIDED WITH HIGH PERFORMING PAINT. REFER TO GENERAL NOTE #7.
E-1316	CONDUIT RUNS AGAINST THE WALL UNDERNEATH OF THE CANOPY. PAINT TO MATCH ADJACENT SURFACE. COORDINATE PAINT COLOR WITH ARCHITECT. REFER TO 18/A8.01 FOR DETAIL
E-1317	NLIGHT CEILING MOUNT OCCUPANCY-VACCANCY SENSOR NCM PIR-9-RGB. REFER TO MANUFACTURER SHOP DRAWINGS AND SHEET E6.01 FOR TYPICAL DETAILS AND DIAGRAMS.

LEGEND

PLAN NOTES

1. CONTRACTOR TO FIELD VERIFY ALL CONDITIONS PRIOR TO ROUGH-IN.
2. CONTRACTOR IS RESPONSIBLE TO VERIFY EXACT LOCATION, QUANTITY, MOUNTING HEIGHT AND FIXTURE TYPE OF ALL LUMINAIRES IN FIELD PRIOR TO PURCHASE AND INSTALLATION. INFORM ENGINEER OF CONFLICTS.
3. CONTRACTOR IS RESPONSIBLE TO CONFIRM CEILING TYPES IN ALL ROOMS (ACCESSIBLE, EXPOSED, OR "HARD") AND TO USE APPROMIATED WIRING METHOD FOR EACH TYPE. INSURE ALL J-BOXES ARE ACCESSIBLE AFTER ALL OTHER TRADE'S WORK IS COMPLETED. DO NOT LOCATE ANY J-BOX ON "HARD" CEILINGS; ALL WIRING MUST BE ACCESSIBLE THROUGH ONLY IN "DAISEY-CHAIN" METHOD OR WITH INDICATED HOMERUNS TO EACH LUMINAIRE. J-BOXES MAY BE LOCATED ABOVE OTHER TRADE'S ACCESS DOORS IF FEASIBLE AND DOES NOT INTERFERE WITH ACCESS.
4. CONTRACTOR TO PROVIDE SHOP DRAWINGS FOR A COMPLETE LIGHTING CONTROL SYSTEM. FINAL PLACEMENT OF DEVICES SHALL BE COORDINATED IN FIELD.
5. OCCUPANCY SENSORS AND PHOTOCELLS SHALL BE LOCATED TO THE MOST EFFICIENT LOCATION AVOIDING OBSTRUCTION. INSTALL PER MANUFACTURER INSTRUCTIONS.
6. CONTRACTOR TO INTERCEPT UNSWITCHED CIRCUIT FEEDING THE LUMINAIRES IN THE AREA TO CONNECT LIGHTING CONTROL DEVICES.
7. IN CORROSIVE ENVIROMENT WIRING METHODS MUST COMPLY WITH NEC 680.14 (A) (B)

KEY PLAN

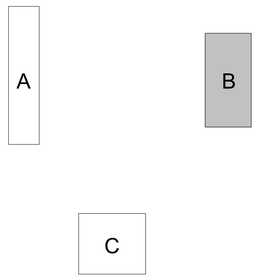

LIGHTING - POOL MECHANICAL BUILDING RCP | 1/4" = 1'-0" | 05

IDENTIFICATION STAMP
DIV. OF THE STATE ARCHITECT
APP: 02-119490 INC:
REVIEWED FOR
SS ☑ FLS ☑ ACS ☑
DATE: 09/13/2022

LPA
ARCHITECTURE ENGINEERING INTERIORS
LANDSCAPE ARCHITECTURE PLANNING

916-287-2400 Office

916-287-2401 Fax

LPADesignStudios.com

431 I Street,
Suite 107
Sacramento, California 95814

REGISTERED PROFESSIONAL ENGINEER
STEPHEN BAKER
E-17415
9/30/23
ELECTRICAL
STATE OF CALIFORNIA

This document and all other project documents, ideas, aesthetics and designs incorporated therein are instruments of service. All project documents are copyright protected, are the property of LPA, Inc. (LPA) and cannot be lawfully used in whole or in part for any project or purpose except as set forth in the contractual agreement between LPA and its Client. The unauthorized disclosure and/or use of the project documents (including the creation of derivative works), may give rise to liability for copyright infringement, unlawful disclosure, use or misappropriation of property rights held by LPA. The unauthorized use of the project documents will give rise to the recovery of monetary losses and damages including attorney fees and costs for which the unauthorized user will be held liable.
Project documents describe the design intent of the work and are not a representation of as-built or existing conditions. LPA is not responsible for any discrepancies between the project documents and the existing conditions.

© LPA, Inc.

DAVIS SENIOR HIGH SCHOOL
NEW AQUATICS CENTER
315 W 14TH ST., DAVIS, CA 95616

Developed for
DAVIS JOINT UNIFIED SCHOOL DISTRICT

Revision	Date

Submittal	Date
50% DESIGN DEVELOPMENT	06/15/2021
100% DD SUBMITTAL	07/26/2021
50% CD REVIEW	10/08/2021
100% CD DSA SUBMITTAL	10/22/2021
DSA SUBMITTAL	03/24/2022

Job Number	1904413
Date Published	03/24/2022
Checked By	LPA
Scale	As indicated

LIGHTING - POOL MECHANICAL BUILDING RCP

E3.11

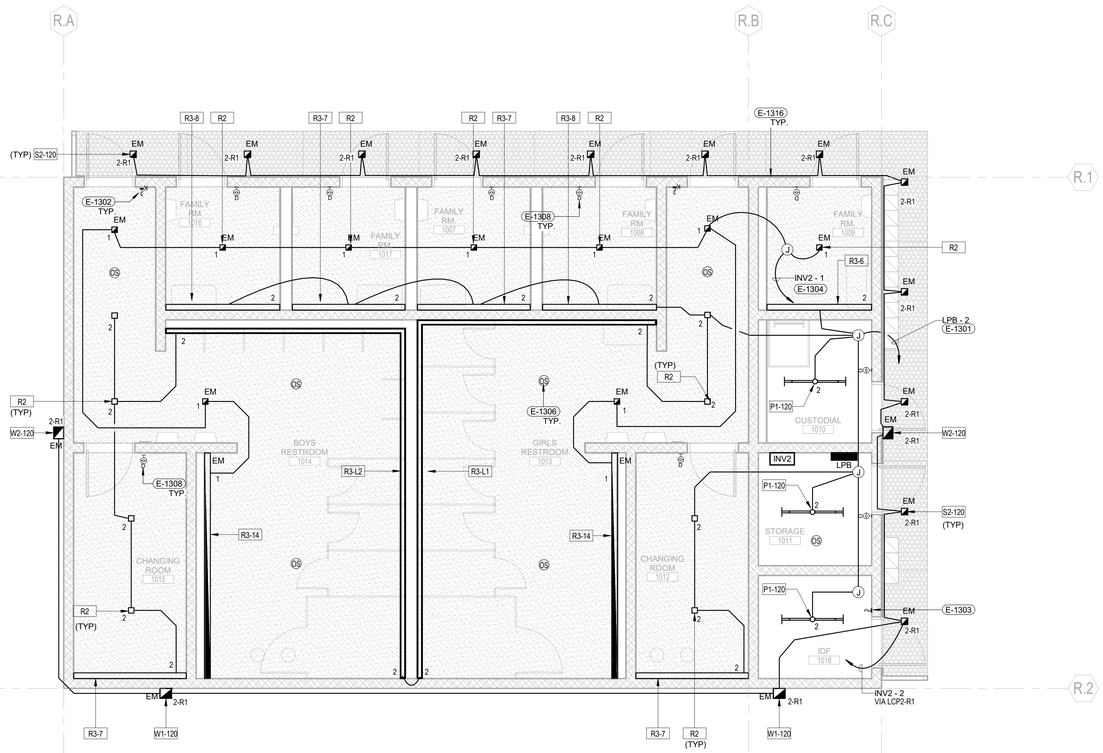

KEYNOTES

ITEM	DESCRIPTION
E-1301	CONTRACTOR TO PROVIDE NLIGHT POWER-RELAY PACK (NPP16D) AS REQUIRED TO INTERFACE WITH LIGHTING FIXTURES AND LIGHTING CONTROL DEVICES. REFER TO MANUFACTURER SHOP DRAWINGS AND SHEET E6.01 FOR TYPICAL DETAILS AND DIAGRAMS.
E-1302	NLIGHT DIGITAL KEY SWITCH (NPOD-KEY). REFER TO MANUFACTURER SHOP DRAWINGS
E-1303	NLIGHT NPODMA WALLPOD ON/OFF REFER TO MANUFACTURER SHOP DRAWINGS
E-1304	CONTRACTOR TO PROVIDE NLIGHT EMERGENCY POWER-RELAY PACK (NPP16D-ER-EFP) AS REQUIRED TO INTERFACE WITH LIGHTING FIXTURES AND LIGHTING CONTROL DEVICES. PROVIDE UNSWITCHED LIGHTING CIRCUIT FOR SENSING. REFER TO MANUFACTURER SHOP DRAWINGS AND SHEET E6.01 FOR TYPICAL DETAILS AND DIAGRAMS.
E-1306	NLIGHT CEILING MOUNT OCCUPANCY-/VACCANCY SENSOR NCM PDT-9-RGB. REFER TO MANUFACTURER SHOP DRAWINGS AND SHEET E6.01 FOR TYPICAL DETAILS AND DIAGRAMS.
E-1308	NLIGHT NWSXA PDT LV DX. REFER TO MANUFACTURER SHOP DRAWINGS
E-1316	CONDUIT RUNS AGAINST THE WALL UNDERNEATH OF THE CANOPY. PAINT TO MATCH ADJACENT SURFACE. COORDINATE PAINT COLOR WITH ARCHITECT. REFER TO 18/A8.01 FOR DETAIL

LEGEND

PLAN NOTES

1. CONTRACTOR TO FIELD VERIFY ALL CONDITIONS PRIOR TO ROUGH-IN.
2. CONTRACTOR IS RESPONSIBLE TO VERIFY EXACT LOCATION, QUANTITY, MOUNTING HEIGHT AND FIXTURE TYPE OF ALL LUMINAIRES IN FIELD PRIOR TO PURCHASE AND INSTALLATION. INFORM ENGINEER OF CONFLICTS.
3. CONTRACTOR IS RESPONSIBLE TO CONFIRM CEILING TYPES IN ALL ROOMS (ACCESSIBLE, EXPOSED, OR "HARD") AND TO USE APPROMIATED WIRING METHOD FOR EACH TYPE. INSURE ALL J-BOXES ARE ACCESSIBLE AFTER ALL OTHER TRADE'S WORK IS COMPLETED. DO NOT LOCATE ANY J-BOX ON "HARD" CEILINGS; ALL WIRING MUST BE ACCESSIBLE THROUGH ONLY IN "DAISEY-CHAIN" METHOD OR WITH INDICATED HOMERUNS TO EACH LUMINAIRE. J-BOXES MAY BE LOCATED ABOVE OTHER TRADE'S ACCESS DOORS IF FEASIBLE AND DOES NOT INTERFERE WITH ACCESS.
4. CONTRACTOR TO PROVIDE SHOP DRAWINGS FOR A COMPLETE LIGHTING CONTROL SYSTEM. FINAL PLACEMENT OF DEVICES SHALL BE COORDINATED IN FIELD.
5. OCCUPANCY SENSORS AND PHOTOCELLS SHALL BE LOCATED TO THE MOST EFFICIENT LOCATION AVOIDING OBSTRUCTION. INSTALL PER MANUFACTURER INSTRUCTIONS.
6. CONTRACTOR TO INTERCEPT UNSWITCHED CIRCUIT FEEDING THE LUMINAIRES IN THE AREA TO CONNECT LIGHTING CONTROL DEVICES.

KEY PLAN

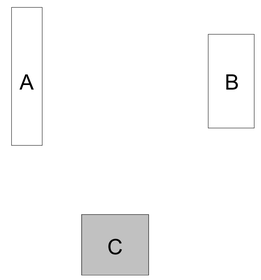

LIGHTING - POOL RESTROOM BUILDING RCP | 1/4" = 1'-0" | 05

IDENTIFICATION STAMP
DIV. OF THE STATE ARCHITECT
APP: 02-119490 INC:
REVIEWED FOR
SS ☑ FLS ☑ ACS ☑
DATE: 09/13/2022

LPA

ARCHITECTURE ENGINEERING INTERIORS
LANDSCAPE ARCHITECTURE PLANNING

916-287-2400 Office

916-287-2401 Fax

LPADesignStudios.com

431 I Street,
Suite 107
Sacramento, California 95814

REGISTERED PROFESSIONAL ENGINEER
STEPHEN BARTLETT
E-17415
9/30/23
ELECTRICAL
STATE OF CALIFORNIA

This document and all other project documents, ideas, aesthetics and designs incorporated therein are instruments of service. All project documents are copyright protected, are the property of LPA, Inc. (LPA) and cannot be lawfully used in whole or in part for any project or purpose except as set forth in the contractual agreement between LPA and its Client. The unauthorized disclosure and/or use of the project documents (including the creation of derivative works), may give rise to liability for copyright infringement, unlawful disclosure, use or misappropriation of property rights held by LPA. The unauthorized use of the project documents will give rise to the recovery of monetary losses and damages including attorney fees and costs for which the unauthorized user will be held liable.
Project documents describe the design intent of the work and are not a representation of as-built or existing conditions. LPA is not responsible for any discrepancies between the project documents and the existing conditions.

© LPA, Inc.

DAVIS SENIOR HIGH SCHOOL
NEW AQUATICS CENTER
315 W 14TH ST., DAVIS, CA 95616

Developed for
DAVIS JOINT UNIFIED SCHOOL DISTRICT

Revision	Date

Submittal	Date
50% DESIGN DEVELOPMENT	06/15/2021
100% DD SUBMITTAL	07/26/2021
50% CD REVIEW	10/08/2021
100% CD DSA SUBMITTAL	10/22/2021
DSA SUBMITTAL	03/24/2022

Job Number	1904413
Date Published	03/24/2022
Checked By	LPA
Scale	As indicated

LIGHTING - POOL RESTROOM BUILDING RCP

E3.12

CANOPY EXPOSED CONDUIT SUPPORT | NTS | 14

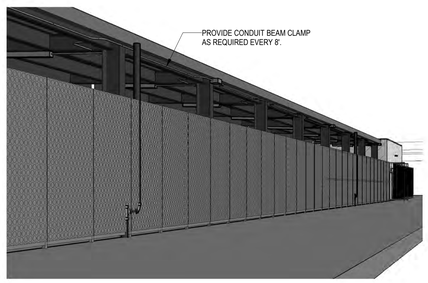

3D - CANOPY CONDUIT RUNING DETAIL | 13

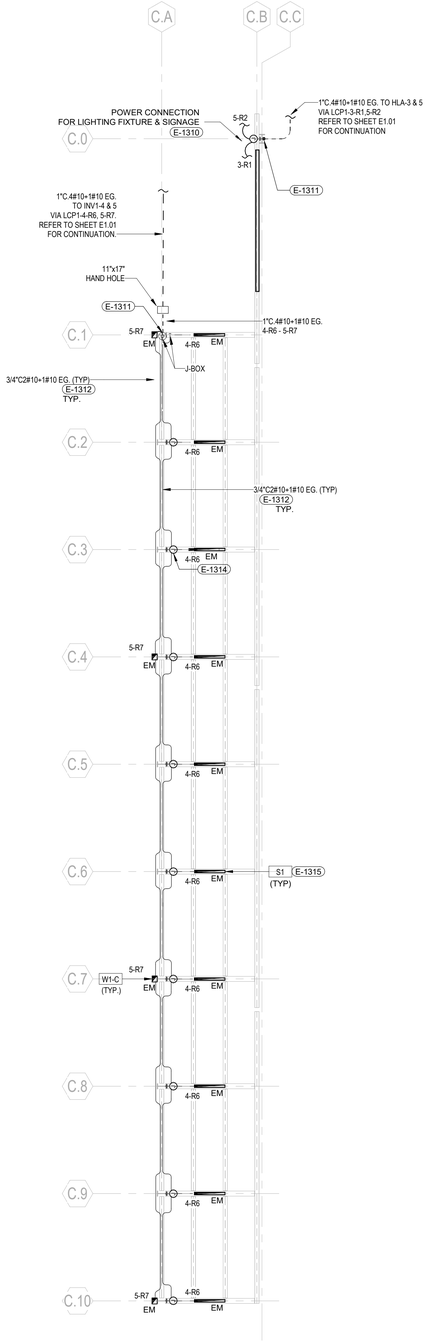

LIGHTING - CANOPY RCP | 1/8" = 1'-0" | 05

KEYNOTES

ITEM	DESCRIPTION
E-1311	DOWN TRANSITION TO UNDER SLAB.
E-1312	CONDUIT ARE EXPOSED. RUN CONDUITS PARALLEL TO STRUCTURAL MEMBERS. PAINT TO MATCH EXISTING SURFACE. COORDINATE WITH ARCHITECT FOR. THE PAINT COLOR. REFER TO DETAIL 14/E3.13 FOR MORE INFORMATION.
E-1314	J-BOXES ARE EXPOSED. PAINT TO MATCH EXISTING SURFACE. COORDINATE WITH ARCHITECT FOR. THE PAINT COLOR. (TYP)
E-1315	PAINT SURFACE MOUNTED JUNCTION-BOX TO MATCH ADJACENT SURFACE COORDINATE PAINT COLOR WITH ARCHITECT.

LEGEND

PLAN NOTES

1. CONTRACTOR TO FIELD VERIFY ALL CONDITIONS PRIOR TO ROUGH-IN.
2. CONTRACTOR IS RESPONSIBLE TO VERIFY EXACT LOCATION, QUANTITY, MOUNTING HEIGHT AND FIXTURE TYPE OF ALL LUMINAIRES IN FIELD PRIOR TO PURCHASE AND INSTALLATION. INFORM ENGINEER OF CONFLICTS.
3. CONTRACTOR IS RESPONSIBLE TO CONFIRM CEILING TYPES IN ALL ROOMS (ACCESSIBLE, EXPOSED, OR "HARD") AND TO USE APPROMIATED WIRING METHOD FOR EACH TYPE. INSURE ALL J-BOXES ARE ACCESSIBLE AFTER ALL OTHER TRADE'S WORK IS COMPLETED. DO NOT LOCATE ANY J-BOX ON "HARD" CEILINGS; ALL WIRING MUST BE ACCESSIBLE THROUGH ONLY IN "DAISEY-CHAIN" METHOD OR WITH INDICATED HOMERUNS TO EACH LUMINAIRE. J-BOXES MAY BE LOCATED ABOVE OTHER TRADE'S ACCESS DOORS IF FEASIBLE AND DOES NOT INTERFERE WITH ACCESS.
4. CONTRACTOR TO PROVIDE SHOP DRAWINGS FOR A COMPLETE LIGHTING CONTROL SYSTEM. FINAL PLACEMENT OF DEVICES SHALL BE COORDINATED IN FIELD.
5. OCCUPANCY SENSORS AND PHOTOCELLS SHALL BE LOCATED TO THE MOST EFFICIENT LOCATION AVOIDING OBSTRUCTION. INSTALL PER MANUFACTURER INSTRUCTIONS.
6. CONTRACTOR TO INTERCEPT UNSWITCHED CIRCUIT FEEDING THE LUMINAIRES IN THE AREA TO CONNECT LIGHTING CONTROL DEVICES.

KEY PLAN

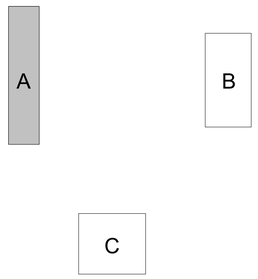

IDENTIFICATION STAMP
DIV. OF THE STATE ARCHITECT
APP: 02-119490 INC:
REVIEWED FOR
SS ☑ FLS ☑ ACS ☑
DATE: 09/13/2022

LPA
ARCHITECTURE ENGINEERING INTERIORS
LANDSCAPE ARCHITECTURE PLANNING

916-287-2400 Office
916-287-2401 Fax
LPADesignStudios.com
431 I Street,
Suite 107
Sacramento, California 95814

REGISTERED PROFESSIONAL ENGINEER
STEPHEN BAKER
E-17415
9/30/23
ELECTRICAL
STATE OF CALIFORNIA

This document and all other project documents, ideas, aesthetics and designs incorporated therein are instruments of service. All project documents are copyright protected, are the property of LPA, Inc. (LPA) and cannot be lawfully used in whole or in part for any project or purpose except as set forth in the contractual agreement between LPA and its Client. The unauthorized disclosure and/or use of the project documents (including the creation of derivative works), may give rise to liability for copyright infringement, unlawful disclosure, use or misappropriation of property rights held by LPA. The unauthorized use of the project documents will give rise to the recovery of monetary losses and damages including attorney fees and costs for which the unauthorized user will be held liable.
Project documents describe the design intent of the work and are not a representation of as-built or existing conditions. LPA is not responsible for any discrepancies between the project documents and the existing conditions.

© LPA, Inc.

DAVIS SENIOR HIGH SCHOOL
NEW AQUATICS CENTER
315 W 14TH ST., DAVIS, CA 95616

Developed for
DAVIS JOINT UNIFIED SCHOOL DISTRICT

Revision	Date

Submittal	Date
50% DESIGN DEVELOPMENT	06/15/2021
100% DD SUBMITTAL	07/26/2021
50% CD REVIEW	10/08/2021
100% CD DSA SUBMITTAL	10/22/2021
DSA SUBMITTAL	03/24/2022

Job Number	1904413
Date Published	03/24/2022
Checked By	LPA
Scale	As indicated

LIGHTING - CANOPY RCP

E3.13

KEYNOTES

ITEM	DESCRIPTION
E-1701	RUN CIRCUIT INV1-3 VIA 277/120V STEP DOWN TRANSFORMER PROVIDED BY MUSCO LIGHTING.
E-1702	RUN CIRCUIT PSL-1 VIA 277/120V STEP DOWN TRANSFORMER PROVIDED BY MUSCO LIGHTING.
E-1703	NLIGHT RELAY PANEL ARP INTENC08 NLT 8SPR MVOLT SC SM DTC.
E-1704	REFER TO STRUCTURAL DETAIL 11/S6.91 FOR ANCHORAGE INFORMATION FOR WALL MOUNTED ELECTRICAL EQUIPMENT.
E-1705	REFER TO STRUCTURAL DETAIL 03/S6.92 FOR ANCHORAGE INFORMATION FOR FLOOR MOUNTED ELECTRICAL EQUIPMENT.
E-1706	GROUND BUS BAR. REFER TO DETAIL 01/E7.01 FOR MORE INFORMATION.

LEGEND

- METAL STUD WALL CONSTRUCTION
- 1 HOUR RATED METAL STUD WALL CONSTRUCTION
- 1 HOUR RATED METAL STUD WALL CONSTRUCTION
- MASONRY WALL CONSTRUCTION

PLAN NOTES

1. CONTRACTOR TO FIELD VERIFY ALL CONDITIONS PRIOR TO ROUGH-IN.
2. ALL ROUTING SHOWN ON ELECTRICAL DRAWINGS ARE DIAGRAMATIC. CONTRACTOR TO VERIFY IN FIELD EXACT LOCATION OF FINAL ROUTING AND COORDINATE WITH ARCHITECT PRIOR TO INSTALLATION.
3. CONTRACTOR TO VERIFY POWER REQUIREMENTS BEFORE ORDERING ELECTRICAL DEVICES.
4. REFER TO MECHANICAL AND PLUMBING DRAWINGS FOR ADDITIONAL CONNECTION TO CONTROL PANELS, SWITCHES, VALVES, STATS, RALY, ETC. INDICATED ON MECHANICAL CONTROL DIAGRAMS. ELECTRICAL CONTRACTOR SHALL VERIFY FINAL CONTROL WIRING REQUIREMENTS WITH ACTUAL EQUIPMENT TO BE INSTALLED PRIOR TO ANY WORK AND PROVIDE ALL NECESSARY CIRCUITS, DEVICES, AND CONNECTIONS AS REQUIRED.
5. CONTRACTOR SHALL VERIFY ACTUAL MECHANICAL EQUIPMENT TO BE INSTALLED AND PROVIDE FUSED DISCONNECT SWITCHES WHEN SUCH EQUIPMENT U.L. LISTING AND/OR LABELING INDICATED MAXIMUM FUSE FOR EQUIPMENT PROTECTION.

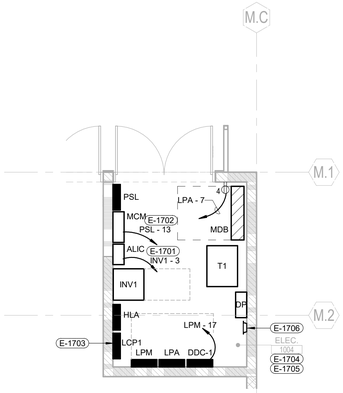

ENLARGED ELECTRICAL ROOM | 1/4" = 1'-0" | 05

KEY PLAN

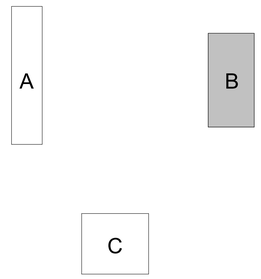

IDENTIFICATION STAMP
DIV. OF THE STATE ARCHITECT
APP: 02-119490 INC:
REVIEWED FOR
SS ☑ FLS ☑ ACS ☑
DATE: 09/13/2022

LPA

ARCHITECTURE ENGINEERING INTERIORS
LANDSCAPE ARCHITECTURE PLANNING

916-287-2400 Office

916-287-2401 Fax

LPADesignStudios.com

431 I Street,
Suite 107
Sacramento, California 95814

REGISTERED PROFESSIONAL ENGINEER
STEPHEN BAKER
E-17415
9/30/23
ELECTRICAL
STATE OF CALIFORNIA

This document and all other project documents, ideas, aesthetics and designs incorporated therein are instruments of service. All project documents are copyright protected, are the property of LPA, Inc. (LPA) and cannot be lawfully used in whole or in part for any project or purpose except as set forth in the contractual agreement between LPA and its Client. The unauthorized disclosure and/or use of the project documents (including the creation of derivative works), may give rise to liability for copyright infringement, unlawful disclosure, use or misappropriation of property rights held by LPA. The unauthorized use of the project documents will give rise to the recovery of monetary losses and damages including attorney fees and costs for which the unauthorized user will be held liable.
Project documents describe the design intent of the work and are not a representation of as-built or existing conditions. LPA is not responsible for any discrepancies between the project documents and the existing conditions.

© LPA, Inc.

DAVIS SENIOR HIGH SCHOOL
NEW AQUATICS CENTER
315 W 14TH ST., DAVIS, CA 95616

Developed for
DAVIS JOINT UNIFIED SCHOOL DISTRICT

Revision	Date

Submittal	Date
50% DESIGN DEVELOPMENT	06/15/2021
100% DD SUBMITTAL	07/26/2021
50% CD REVIEW	10/08/2021
100% CD DSA SUBMITTAL	10/22/2021
DSA SUBMITTAL	03/24/2022

Job Number	1904413
Date Published	03/24/2022
Checked By	LPA
Scale	As indicated

ENLARGED
ELECTRICAL PLAN

E4.01

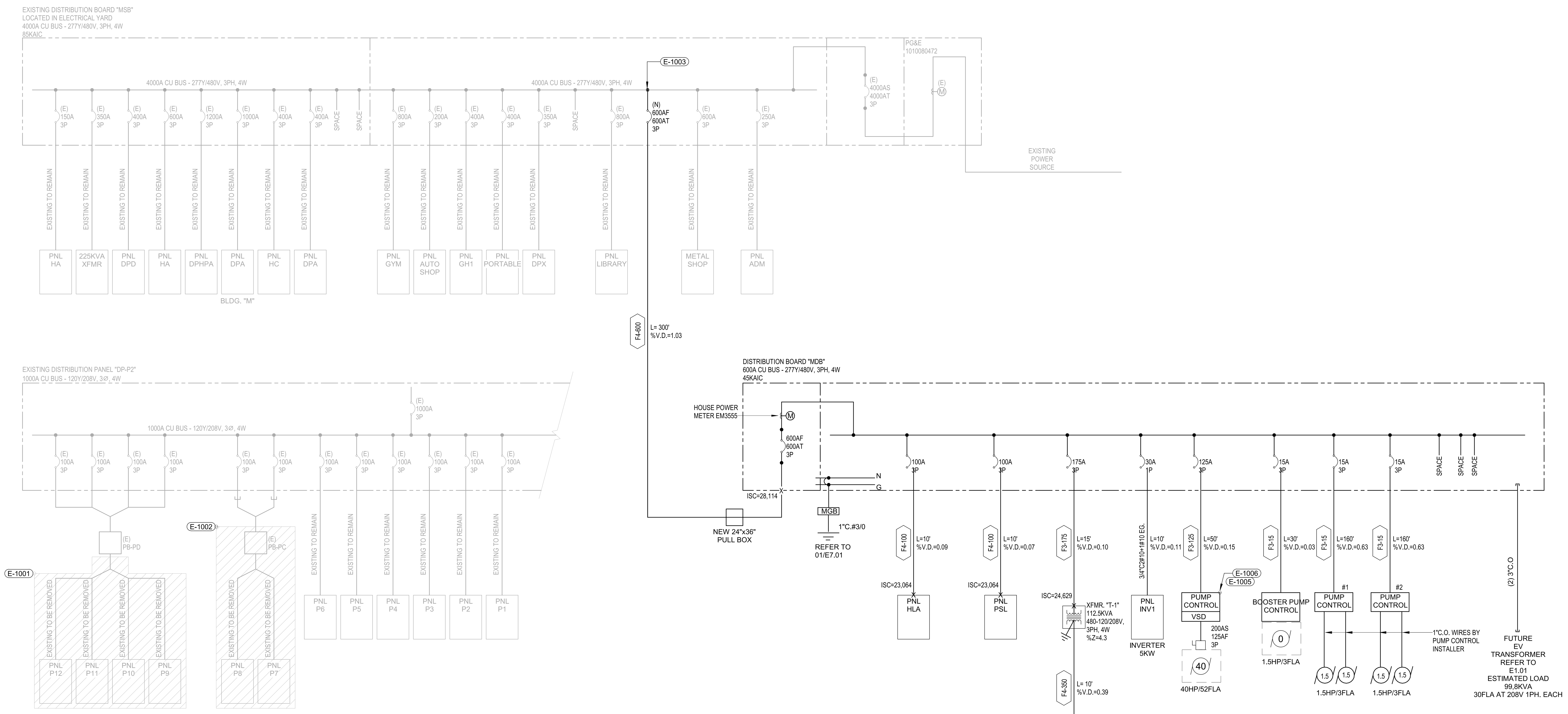

LOAD SUMMARY "MSB" 4000A CU BUS - 277Y/480V. 3Ø, 4W

MAX. PEAK DEMAND PER SCE-(2019)	
672.4KW / .85= 791.0 KVA x 1.25 =	989.0 KVA
NEW PROJECT LOAD ADDED	374.0 KVA
STEM LAB LOAD	457.1 KVA
AQUATIC NEW LOAD	147.1 KVA
ESTIMATED EV LOAD (FUTURE)	99.8 KVA
TOTAL	2,067.0 KVA

2,486.2A @ 480V, 3Ø , 4W
EXISTING SERVICE IS ADEQUATED.

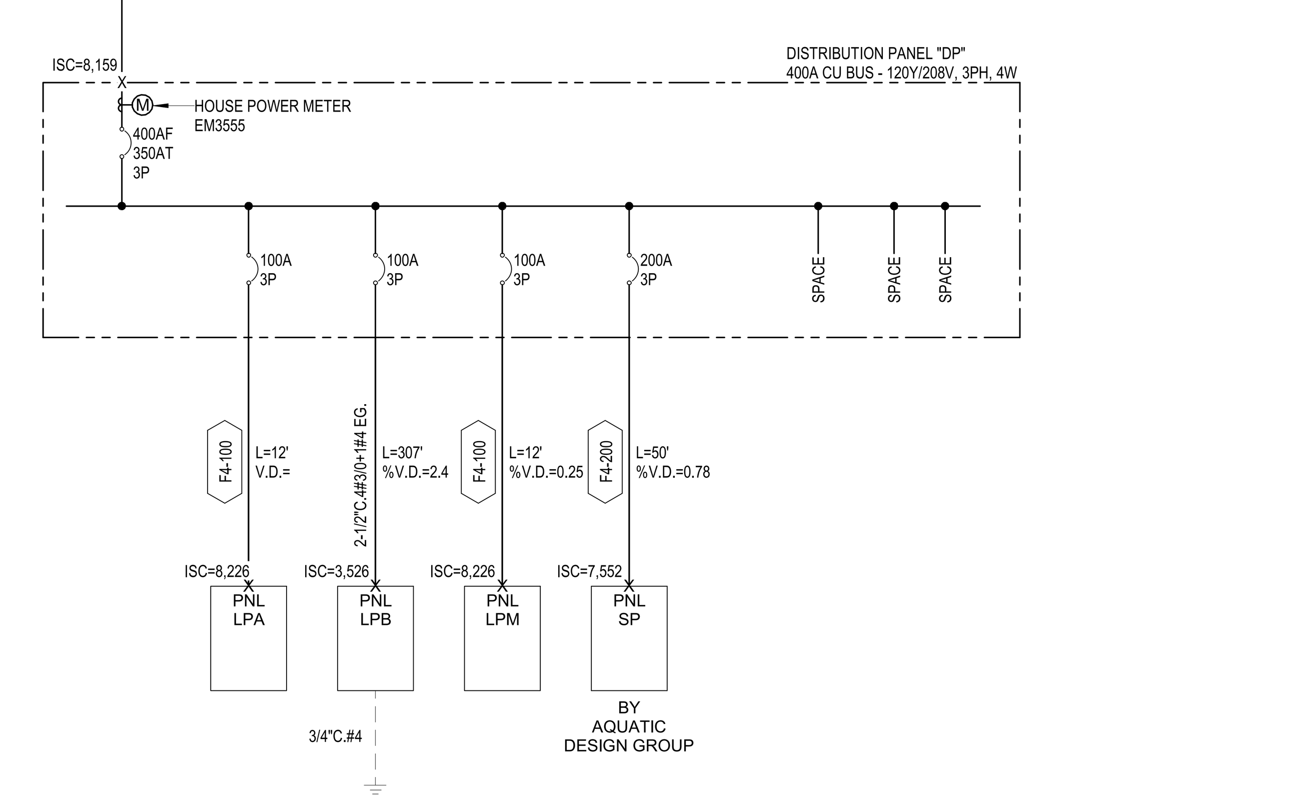

COPPER FEEDER SCHEDULE-75°C

MARK (AMPACITY)	FEEDER 4W # SETS	Ø & N	GND	C	MARK (AMPACITY)	FEEDER 3W # SETS	Ø	GND	C
F4-15	1	12	12	3/4"	F3-15	1	12	12	3/4"
F4-20	1	12	12	3/4"	F3-20	1	12	12	3/4"
F4-30	1	10	10	3/4"	F3-30	1	10	10	3/4"
F4-40	1	8	10	3/4"	F3-40	1	8	10	3/4"
F4-50	1	8	10	3/4"	F3-50	1	8	10	3/4"
F4-60	1	6	10	1"	F3-60	1	6	10	3/4"
F4-70	1	4	8	1-1/4"	F3-70	1	3	8	1"
F4-80	1	4	8	1-1/4"	F3-80	1	4	8	1"
F4-90	1	3	8	1-1/4"	F3-90	1	3	8	1-1/4"
F4-100	1	3	8	1-1/4"	F3-100	1	3	8	1-1/4"
F4-110	1	2	6	1-1/2"	F3-110	1	2	6	1-1/4"
F4-125	1	1	6	1-1/2"	F3-125	1	1	6	1-1/2"
F4-150	1	1/0	6	2"	F3-150	1	1/0	6	1-1/2"
F4-175	1	2/0	6	2"	F3-175	1	2/0	6	2"
F4-200	1	3/0	6	2"	F3-200	1	3/0	6	2"
F4-225	1	4/0	4	2-1/2"	F3-225	1	4/0	4	2"
F4-250	1	250	4	2-1/2""	F3-250	1	250	4	2-1/2"
F4-300	1	350	4	3"	F3-300	1	350	4	2-1/2"
F4-350	1	500	3	3-1/2"	F3-350	1	500	3	3"
F4-400	2	3/0	3	2"	F3-400	2	3/0	3	2"
F4-450	2	4/0	2	2-1/2"	F3-450	2	4/0	2	2"
F4-500	2	250	2	2-1/2"	F3-500	2	250	2	2-1/2"
F4-550	2	300	1	3"	F3-550	2	300	1	2-1/2"
F4-600	2	350	1	3"	F3-600	2	350	1	2-1/2"
F4-650	2	400	1/0	3"	F3-650	2	400	1/0	3"
F4-750	2	500	1/0	3-1/2"	F3-750	2	500	1/0	3"
F4-800	3	300	1/0	3"	F3-800	3	300	1/0	2-1/2"
F4-1000	3	500	2/0	3-1/2"	F3-1000	3	400	2/0	3"
F4-1200	4	350	3/0	3"	F3-1200	4	350	3/0	3"
F4-1600	5	500	4/0	3-1/2"	F3-1600	4	500	4/0	3"
F4-2000	5	500	250	3-1/2"	F3-2000	5	500	250	3"
F4-2500	7	500	350	3-1/2"	F3-2500	8	400	350	3"
F4-3000	8	500	400	4"	F3-3000	8	500	400	3-1/2"
F4-4000	11	500	500	4"	F3-4000	10	600	500	3-1/2"

FEEDER SIZING NOTES:
1. 4 WIRE FEEDERS (4W), ABCN-G
2. 3 WIRE FEEDERS (3W), ABC-G
3. " IG" INDICATING A 4 WIRE PLUS ISOLATED GROUND AND EQUIPMENT GROUND
"K" INDICATING A 4 WIRE WITH OVERSIZED NEUTRAL
4. NOT ALL SIZES USED.

DEFINITIONS:
ø - PHASE
N - NEUTRAL
C - CONDUIT
GND - EQUIPMENT GROUNDING CONDUCTOR
BJ - BONDING JUMPER

FAN (EXHAUST) SCHEDULE

TAG	SERVICE	LOCATION	ELECTRICAL VOLTAGE	PHASE	FLA	DISCONNECT	CONDUIT/WIRE
EF-1	1002 CHEM STORAGE	POOL MECHANICAL ROOF	208 V	3	2.9 A	30AS/3P/5AF NEMA 3R	1/2"C. 3#12 + 1#12 GND.
EF-2	1003 CHEM STORAGE	POOL MECHANICAL ROOF	208 V	3	2.9 A	30AS/3P/5AF NEMA 3R	1/2"C. 3#12 + 1#12 GND.
EF-3	1001 ROOM MECHANICAL	POOL MECHANICAL ROOF	208 V	3	3.5 A	30AS/3P/5AF NEMA 3R	1/2"C. 3#12 + 1#12 GND.
EF-4	1005 STORAGE	POOL MECHANICAL ROOF	115 V	1	9.8 A	MOTOR RATED TOGGLE SWITCH	1/2"C. 2#12 + 1#12 GND.
EF-5	1014 & 1015 BOYS RESTROOM/CHANGING RM	POOL RESTROOM ROOF	115 V	1	3.2 A	MOTOR RATED TOGGLE SWITCH	1/2"C. 2#12 + 1#12 GND.
EF-6	1012 & 1013 GIRLS RESTROOM/CHANGING RM	POOL RESTROOM ROOF	115 V	1	1.9 A	MOTOR RATED TOGGLE SWITCH	1/2"C. 2#12 + 1#12 GND.
EF-7	1007-1009 & 1016-1017 FAMILY RM	POOL RESTROOM ROOF	115 V	1	7.7 A	MOTOR RATED TOGGLE SWITCH	1/2"C. 2#12 + 1#12 GND.
EF-8	1010 CUSTODIAL	1010 CUSTODIAL	115 V	1	4.4 A	MOTOR RATED TOGGLE SWITCH	1/2"C. 2#12 + 1#12 GND.
EF-9	1011 STORAGE	1011 STORAGE	115 V	1	4.4 A	MOTOR RATED TOGGLE SWITCH	1/2"C. 2#12 + 1#12 GND.

SPLIT SYSTEM INDOOR UNIT SCHEDULE

ML	SERVICE/LOCATION	POWERED FROM OUTDOOR	DISCONNECT	CONDUIT/WIRE
FC-1	1004 ELECTRICAL	YES	MOTOR RATED TOGGLE SWITCH	INTERLOCK WITH HP ON ROOF
FC-2	1006 OFFICE	YES	MOTOR RATED TOGGLE SWITCH	INTERLOCK WITH HP ON ROOF
FC-3	1018 IDF	YES	MOTOR RATED TOGGLE SWITCH	INTERLOCK WITH HP ON ROOF

SPLIT SYSTEM OUTDOOR UNIT SCHEDULE

TAG	SERVICE	LOCATION	ELECTRICAL VOLTAGE	PHASE	MCA	MOCP	DISCONNECT	CONDUIT/WIRE
HP-1	FC-1	POOL MECHANICAL ROOF	208 V	1	15 A	20 A	30AS/2P/15AF NEMA 3R	1/2"C. 2#10 + 1#10 GND.
HP-2	FC-2	POOL MECHANICAL ROOF	208 V	1	20 A	30 A	30AS/2P/20AF NEMA 3R	1/2"C. 2#10 + 1#10 GND.
HP-3	FC-3	POOL RESTROOM ROOF	208 V	1	15 A	20 A	30AS/2P/15AF NEMA 3R	1/2"C. 2#10 + 1#10 GND.

KEYNOTES

ITEM	DESCRIPTION
E-1001	EXISTING PANEL TO BE REMOVED, EXISTING CONDUCTOR TO BE REMOVED BACK TO "DP-P2". EXISTING CONDUIT TO BE REMOVED BACK TO NEAREST PULL BOX. EXISTING 100A/3P BREAKER TO REMAIN AND TO BE LABELED AS A SPARE.
E-1002	EXISTING PANEL TO BE REMOVED, EXISTING CONDUCTOR TO BE REMOVED BACK TO "DP-P2". EXISTING CONDUIT TO BE REMOVED BACK TO "DP-P2" AND CAP AS SHOWN. EXISTING PULL BOX TO BE REMOVED. EXISTING 100A/3P BREAKER TO REMAIN AND TO BE LABELED AS A SPARE.
E-1003	PROVIDE AND INSTALL NEW 600A/3P BREAKER IN EXISTING SPACE. CONTRACTOR TO MATCH EXISTING BREAKER RATING (FIELD VERIFY).
E-1005	120V CIRCUIT BY ADG REFER TO SHEET 7/AQ2.6, 8/AQ2.6 AND 4/AQ2.5.
E-1006	FUSE PER MANUFACTURER NAME PLATE.

PLAN NOTES

1. ALL EQUIPMENT TO BE SQUARE D OR EQUAL BY SIEMENS, CUTLER-HAMMER, G.E., OR RSC-SIERRA.
2. ALL ELECTRICAL EQUIPMENT SHALL BE PROVIDED WITH SPECIFIED AND APPROPRIATE UL LISTING BASED ON THE ENVIRONMENT IN WHICH THE EQUIPMENT IS TO BE MOUNTED.
3. ALL ELECTRICAL EQUIPMENT SHALL BE PROVIDED WITH AND BRACED FOR REQUIRED FAULT CURRENT RATINGS BASED ON THEIR VOLTAGE AND LOCATION WITHIN THE SYSTEM. SHOP DRAWINGS TO INCLUDE FAULT CURRENT RATINGS FOR ALL ELECTRICAL EQUIPMENT. ALL EQUIPMENT SHALL BE FULLY RATED, NO SERIES RATING SHALL BE ALLOWED.
4. ALL TERMINATIONS AND ENCLOSURES SHALL BE RATED FOR USE WITH 75 DEGREES CELSIUS CONDUCTORS.
5. ALL SERVICE ENTRANCE EQUIPMENT/DISTRIBUTION BOARDS/SWITCHBOARDS RATED AT 600A OR GREATER SHALL BE PROVIDED WITH A SOLID STATE MAIN OVER-CURRENT PROTECTIVE DEVICE AND BUSSING RATED AT 100% OPERATION.
6. ALL SWITCH/DISTRIBUTION BOARDS SHALL BE PROVIDED WITH:
   a. TIN-PLATED ALUMINUM BUSSING WITH RECTANGULAR CROSS SECTION. HORIZONTAL AND VERTICAL BUSSING SHALL BE FULL LENGTH AND HAVE PROVISIONS FOR FUTURE EXTENSIONS WERE APPLICABLE. ALL BUSSING SHALL HAVE A MINIMUM WITHSTAND RATING EQUAL TO AVAILABLE FAULT CURRENT INDICATED ON THE AIC CALCULATION. ALL VERTICAL AND HORIZONTAL BUSSING SHALL BE RATED AT FULL CAPACITY IN ALL SWITCHBOARD AND DISTRIBUTION BOARD ASSEMBLIES. PROVIDE 100% NEUTRAL BUSSING MINIMUM - UNLESS OTHERWISE NOTED. PROVIDE FULL LENGTH GROUND BUSS, AND WHERE INDICATED ON PLANS, ISOLATED GROUND BUSSING. PROVIDE REAR WIRE WAY IN ALL SWITCHBOARD SECTIONS - UNLESS OTHERWISE NOTED OR REQUIRED.
   b. LUGS SHALL BE SUITABLE FOR USE WITH BOTH COPPER AND ALUMINUM CONDUCTORS AND 75 DEGREE CELSIUS AMPACITY CONDUCTORS.
   c. PERMANENT PLACARDS(S) MARKED PER THE SPECIFICATIONS AND PER CEC - WHERE ADOPTED SECTIONS 225.37, 230.2(E), 690.56(B) & (C), 692.56, 700.8, 701.9, AND 702.8 DENOTING PRESENCE OF ADDITIONAL SERVICES, PHOTOVOLTAIC SYSTEMS, FUEL CELLS, EMERGENCY OR STAND-BY POWER SOURCES, ETC. AS APPLICABLE.
7. CONTRACTOR SHALL PROVIDE SWITCHBOARD SHOP DRAWINGS TO SERVING UTILITY COMPANY PRIOR TO FABRICATION OF EQUIPMENT. CONTRACTOR SHALL SECURE CONFIRMATION PROPOSED SWITCHBOARD COMPLIES WITH ELECTRICAL UTILITY COMPANY REGULATIONS.
8. ELECTRICAL EQUIPMENT SUBMITTALS SHALL BE ACCOMPANIED BY A 1/4" = 1'-0" SCALED DRAWING WHICH REFERENCES ALL ELECTRICAL EQUIPMENT ROOMS AND EQUIPMENT. DRAWING SHALL CLEARLY IDENTIFY ADEQUATE SPACE IS PROVIDED IN ELECTRICAL ROOMS TO ACCOMMODATE THE INSTALLATION OF ELECTRICAL EQUIPMENT WHILE MAINTAINING ALL REQUIRED CODE CLEARANCES. ALL SUBMITTALS NOT ACCOMPANIED BY SCALED DRAWING WILL BE REJECTED AS INCOMPLETE.
9. EC SHALL CONDUCT, WITH ASSISTANCE OF SWITCHGEAR MANUFACTURER, AN ELECTRICAL HAZARD ANALYSIS CONSISTING OF AN ARC FLASH, SHORT CIRCUIT, AND COORDINATION STUDY TO DETERMINE APPROPRIATE LEVELS OF PERSONNEL PROTECTIVE EQUIPMENT (PPE) AS REQUIRED BY NFPA 70E AND IEEE STD 1584, AND TO ENSURE PROPER COORDINATION (INCLUDING GROUND FAULT COORDINATION) EXISTS BETWEEN ALL OVER- CURRENT PROTECTIVE DEVICES SHOWN ON SINGLE-LINE DIAGRAM. ADDITIONALLY:
   a. STUDY SHALL INCLUDE ALL PORTIONS OF ELECTRICAL SINGLE-LINE DIAGRAM. NORMAL SYSTEM CONNECTIONS AND THOSE THAT RESULT IN MAXIMUM FAULT CONDITION SHALL BE ADEQUATELY COVERED IN THE STUDY. PERFORM STUDY WITH THE AID OF A COMPUTER PROGRAM, SKM CAPTOR, OR EQUAL. STUDY SHALL IDENTIFY SELECTIVE COORDINATION SUCH THAT DEVICE CLOSEST TO FAULT WILL TRIP FIRST. GROUND FAULT PORTION OF THE STUDY SHALL DEMONSTRATE COORDINATION OF MAIN BREAKER AND ANY FEEDER GROUND FAULT DEVICES WITH DOWNSTREAM CIRCUIT BREAKERS 30A AND LESS.
   b. EC SHALL BE RESPONSIBLE TO RECOMMEND SETTINGS OF ALL DEVICES AND TO NCLUDE GROUND FAULT SETTINGS NECESSARY TO ACHIEVE SYSTEM COORDINATION. CONTRACTOR SHALL FIELD ADJUST DEVICES ACCORDINGLY UTILIZING A QUALIFIED MANUFACTURER'S REPRESENTATIVE.
   c. DURING THE CONSTRUCTION PHASE OF THE PROJECT ALL GROUND FAULT RELAYS SHALL BE SET AT SHORTEST AVAILABLE TIME DELAY.
   d. RESULT OF COORDINATION STUDY SHALL BE SUBMITTED AS PART OF OVERALL SWITCHGEAR SUBMITTAL AND SHALL INCLUDE PROTECTIVE DEVICE TIME VERSUS CURRENT COORDINATION CURVES, GROUPING APPROPRIATE DEVICES TOGETHER, TABULATIONS OF RELAY AND CIRCUIT BREAKER TRIP SETTINGS, FUSE SELECTION, AND COMMENTARY REGARDING SAME.
   e. A GROUND FAULT SYSTEM TEST SHALL BE CONDUCTED BY AN INDEPENDENT TESTING AGENCY PER CEC - 230.95(C). GROUND FAULT SYSTEM TEST SHALL BE PERFORMED IN PRESENCE OF LOCAL AHJ. VERIFICATION OF DEVICE SETTINGS PER THE COORDINATION STUDY SHALL BE PERFORMED BY SAME INDEPENDENT TESTING AGENCY. GROUND FAULT TEST RESULTS SHALL BE DELIVERED TO ENGINEER OF RECORD.
   f. PERFORM ARC FLASH ANALYSIS TO DETERMINE FALSH BOUNDARY, FLASH HAZARD CATEGORY, PPE REQUIREMENTS, AND MINIMUM ARC RATING (CAL/SQUARE CM). ABOVE INFORMATION SHALL BE INDICATED AT EACH ARC FLASH SOURCE ON A CEC COMPLIANT ARC FLASH HAZARD LABEL(S) AS MANUFACTURED BY BRADY.
10. GROUND ALL ELECTRICAL EQUIPMENT, BRANCH CIRCUITS, FEEDERS, PANEL AND DISTRIBUTION BOARDS, ELECTRICAL SERVICES, ETC. PER ADOPTED CEC ARTICLE 250.
11. FEEDER SPECIFICATIONS ARE BASED ON USE OF COPPER CONDUCTORS AND SHALL BE PROVIDED WITH A CODE SIZED COPPER GROUNDING CONDUCTOR.
12. ALL MAIN SWITCHBOARDS, PANELBOARDS, DISTRIBUTION BOARDS, ETC SHALL BE PROVIDED WITH A COPPER BUSS RATED AT SPECIFIED AMPACITY. ALL SWITCHBOARDS AND DISTRIBUTION BOARDS SHALL ALIGN IN FRONT. ALL PANELBOARDS SHALL BE PROVIDED WITH BOLT-ON BREAKERS, DEADFRONT COVERS WITH LOCKABLE DOORS, FACTORY INSTALLED MAIN CIRCUIT BREAKERS (IF APPLICABLE), AND PANEL DIRECTORY PER THESE DOCUMENTS.
13. TRANSIENT VOLTAGE SURGE PROTECTION SHALL BE PROVIDED IN ALL MAIN SWITCHGEAR AND DISTRIBUTION BOARD UNLESS OTHERWISE NOTED OR IDENTIFIED ON DRAWINGS. COORDINATE WITH LOCAL UTILITY COMPANY.
14. ALL PANELBOARDS INSTALLED IN GARAGES OR AREAS COMPLYING WITH ARTICLE 500, 511, AND/OR 514 SHALL BE INSTALLED 18" ABOVE FLOOR LINE TO BOTTOM OF PANEL AND SHALL BE IN MULTIPLE PANELS AS REQUIRED WITH TOP MOST BREAKER NO HIGHER THAN 6'-7" A.F.F. PER ARTICLE 380.
15. ALL ELECTRICAL EQUIPMENT (I.E. SWITCHGEAR, TRANSFORMERS, DISTRIBUTION BOARDS, PANELBOARDS, DISCONNECT SWITCHES, ETC.) SHALL BE PROVIDED WITH A PHENOLIC NAMEPLATE WITH ENGRAVED WHITE LETTERS REFERENCING FOLLOWING INFORMATION:

   LINE 1 - "EQUIPMENT NAME"
   LINE 2 - "FED FROM ..."
   LINE 3 - "VOLTAGE, AMPACITY, PHASE"
   LINE 4 - "DATE INSTALLED"

   NAMEPLATES SHALL BE SIZED BASED ON FOLLOWING:

   SWITCHBOARDS, DISTRIBUTION BOARDS, TRANSFORMERS:
   * LINE 1 = 1/2" LETTERS, LINES 2, 3, & 4 = 1/4" LETTERS

   PANELBOARDS, MOTOR CONTROL CENTERS, DISCONNECTS, STARTERS, ETC:
   * LINE 1 = 3/8" LETTERS, LINES 2, 3, & 4 = 1/4" LETTERS

   NAMEPLATE COLORS SHALL BE AS FOLLOWS:

   BLACK = NORMAL POWER
   RED = LIFE SAFETY/EMERGENCY POWER
   BLUE = STANDBY POWER
   GREEN = INVERTOR POWER

   ALL NAMEPLATES SHALL BE FASTENED WITH A MINIMUM OF TWO (2) MACHINE SCREWS. NO SELF ADHESIVE NAMEPLATES ARE ALLOWED.
16. ELECTRICAL DESIGN COMPUTES VOLTAGE DROP BASED ON FEEDER LENGTHS REFERENCED ON SINGLE-LINE DIAGRAM. EC TO NOTIFY ENGINEER OF RECORD IN EVENT FIELD CONDITIONS CAUSE A SUBSTANTIAL INCREASE IN OVERALL FEEDER LENGTH.
17. ANY FLOOR-STANDING ELECTRICAL EQUIPMENT (I.E. INVERTERS, DISTRIBUTION BOARDS, SWITCHBOARDS, ATS SWITCHES, MOTOR CONTROL CENTERS, ETC.) WHICH ARE MOUNTED AT/BELOW GRADE AND/OR SUSCEPTIBLE TO WATER DAMAGE SHALL BE MOUNTED ON A MINIMUM 4" HIGH HOUSEKEEPING PAD WHICH EXTENDS 4" BEYOND EQUIPMENT IN ALL DIRECTIONS.
18. ALL MOTOR RELATED CIRCUITS ARE TO BE PROVIDED WITH PROTECTIVE RELAYS FOR PHASE FAILURE AND UNDER-VOLTAGE.
19. ELECTRICAL CONTRACTOR TO INCLUDE IN BID ALL ASSOCIATED COSTS FOR THIRD PARTY TESTING OF ELECTRICAL EQUIPMENT, GROUND FAULT, CONDUCTORS, ETC..

IDENTIFICATION STAMP
DIV. OF THE STATE ARCHITECT
APP: 02-119490 INC:
REVIEWED FOR
SS ☑ FLS ☑ ACS ☑
DATE: 09/13/2022

LPA
ARCHITECTURE ENGINEERING INTERIORS LANDSCAPE ARCHITECTURE PLANNING
916-287-2400 Office
916-287-2401 Fax
LPADesignStudios.com
431 I Street,
Suite 107
Sacramento, California 95814

REGISTERED PROFESSIONAL ENGINEER STEPHEN BAKIN E-17415 9/30/23 ELECTRICAL STATE OF CALIFORNIA

This document and all other project documents, ideas, aesthetics and designs incorporated therein are instruments of service. All project documents are copyright protected, are the property of LPA, Inc. (LPA) and cannot be lawfully used in whole or in part for any project or purpose except as set forth in the contractual agreement between LPA and its Client. The unauthorized disclosure and/or use of the project documents (including the creation of derivative works), may give rise to liability for copyright infringement, unlawful disclosure, use or misappropriation of property rights held by LPA. The unauthorized use of the project documents will give rise to the recovery of monetary losses and damages including attorney fees and costs for which the unauthorized user will be held liable.
Project documents describe the design intent of the work and are not a representation of as-built or existing conditions. LPA is not responsible for any discrepancies between the project documents and the existing conditions.
© LPA, Inc.

DAVIS SENIOR HIGH SCHOOL
NEW AQUATICS CENTER
315 W 14TH ST., DAVIS, CA 95616
Developed for
DAVIS JOINT UNIFIED SCHOOL DISTRICT

Revision	Date

Submittal	Date
50% DESIGN DEVELOPMENT	06/15/2021
100% DD SUBMITTAL	07/26/2021
50% CD REVIEW	10/08/2021
100% CD DSA SUBMITTAL	10/22/2021
DSA SUBMITTAL	03/24/2022

Job Number	1904413
Date Published	03/24/2022
Checked By	LPA
Scale	As indicated

SINGLE LINE DIAGRAM AND LOAD FEEDER SCHEDULE

E5.01

Switchboard: MDB

LOCATION:	ELEC. 1004	VOLTS:	277/480V	A.I.C. RATING:	45K
SUPPLY FROM:	(E) MSB	PHASES:	3	MAINS TYPE:	MCB
MOUNTING:	FLOOR	WIRES:	4	MAINS RATING:	600 A
ENCLOSURE:	NEMA 1			MCB RATING:	600 A

Notes:

CKT	CIRCUIT DESCRIPTION	# OF POLES	TRIP RATING	LOAD	REMARKS
1	HLA	3	100 A	3146 VA	
2	PSL	3	100 A	10376 VA	
3	T1	3	175 A	71962 VA	
4	INV1	1	30 A	3469 VA	
5	SMART PUMP CONTROL	3	125 A	43233 VA	
6	BOOSTER PUMP	3	15 A	2494 VA	
7	EJECTOR PUMP #2	3	15 A	4989 VA	
8	EJECTOR PUMP #1	3	15 A	4989 VA	
9	FUTURE EV CHARGE STATION (TRANSFORMER)	3	175 A	99840 VA	
10					
11					
12					
13					
14					
15					
16					
17					
18					
19					
20					
				244498 VA	
				294 A	

Legend:

LOAD CLASSIFICATION	CONNECTED...	DEMAND FACTOR	EST. DEMAND	PANEL TOTALS	
CONTINUOUS LOADS	3820 VA	125.00%	4775 VA		
KITCHEN LOADS	0 VA	0.00%	0 VA	TOTAL CONN. LOAD:	244498 VA
LIGHTING LOADS	5706 VA	125.00%	7133 VA	TOTAL EST. DEMAND:	246880 VA
MOTOR LOADS	109203 VA	100.00%	109203 VA	TOTAL CONN. CURRENT:	294 A
NON CONTINUOUS LOADS	17794 VA	100.00%	17794 VA	TOTAL EST. DEMAND...	297 A
RECEPTACLE LOADS	7780 VA	100.00%	7780 VA		

Branch Panel: DP

LOCATION:	ELEC. 1004	VOLTS:	120/208V	A.I.C. RATING:	22K
SUPPLY FROM:	T1	PHASES:	3	MAINS TYPE:	MCB
MOUNTING:	SURFACE	WIRES:	4	BUS RATING:	400 A
ENCLOSURE:	NEMA1			MCB RATING:	350A

NOTES:

CKT	CIRCUIT DESCRIPTION	TRIP	P	A		B		C		P	TRIP	CIRCUIT DESCRIPTION	CKT
1	LPA	100 A	3	2580 VA	7213 VA					3	100 A	LPB	2
3	--	--	--			1800 VA	5499 VA			--	--	--	4
5	--	--	--					1280 VA	5224 VA	--	--	--	6
7	LPM	100 A	3	5116 VA	13170...					3	200 A	SP PANEL	8
9	--	--	--			5136 VA	11496...			--	--	--	10
11	--	--	--					2492 VA	10956...	--	--	--	12
13													14
15													16
17													18
19													20
21													22
23													24
25													26
27													28
29													30
31													32
33													34
35													36
37													38
39													40
41													42
			TOTA...	28079 VA		23931 VA		19952 VA					
			TOTA...	239 A		205 A		166 A					

LEGEND:

LOAD CLASSIFICATION	CONNECTED...	DEMAND...	ESTIMATED...	PANEL TOTALS	
CONTINUOUS LOADS	3420 VA	125.00%	4275 VA		
KITCHEN LOADS	0 VA	0.00%	0 VA	TOTAL CONN. LOAD:	71962 VA
LIGHTING LOADS	904 VA	125.00%	1130 VA	TOTAL EST. DEMAND	73043 VA
MOTOR LOADS	53498 VA	100.00%	53498 VA	TOTAL CONN....	200 A
NON CONTINUOUS LOADS	6200 VA	100.00%	6200 VA	TOTAL EST. DEMAN...	203 A
RECEPTACLE LOADS	7780 VA	100.00%	7780 VA		

NOTES:

Branch Panel: HLA

LOCATION:	ELEC. 1004	VOLTS:	277/480V	A.I.C. RATING:	42K
SUPPLY FROM:	MDB	PHASES:	3	MAINS TYPE:	M.L.O.
MOUNTING:	SURFACE	WIRES:	4	BUS RATING:	100 A
ENCLOSURE:	NEMA 1			MCB RATING:	100 A

NOTES:

CKT	CIRCUIT DESCRIPTION	TRIP	P	A		B		C		P	TRIP	CIRCUIT DESCRIPTION	CKT
1	GENERAL LIGHTING	20 A	1	662 VA	0 VA					1	20 A	Spare	2
3	SIGNAGE (LCP1)	20 A	1			1200 VA	0 VA			1	20 A	Spare	4
5	BEACON LIGHTING (LCP1)	20 A	1					1200 VA	0 VA	1	20 A	Spare	6
7	POOL DECK & STORAGE LTG (LCP1)	20 A	1	84 VA	0 VA					1	20 A	Spare	8
9	Spare	20 A	1			0 VA	0 VA			1	20 A	Spare	10
11	Spare	20 A	1					0 VA	0 VA	1	20 A	Spare	12
13	Spare	20 A	1	0 VA	0 VA					1	20 A	Spare	14
15	Space	--	--			0 VA	0 VA			--	--	Space	16
17	Space	--	--					0 VA	0 VA	--	--	Space	18
19	Space	--	--	0 VA	0 VA					--	--	Space	20
21	Space	--	--			0 VA	0 VA			--	--	Space	22
23	Space	--	--					0 VA	0 VA	--	--	Space	24
25	Space	--	--	0 VA	0 VA					--	--	Space	26
27	Space	--	--			0 VA	0 VA			--	--	Space	28
29	Space	--	--					0 VA	0 VA	--	--	Space	30
31	Space	--	--	0 VA	0 VA					--	--	Space	32
33	Space	--	--			0 VA	0 VA			--	--	Space	34
35	Space	--	--					0 VA	0 VA	--	--	Space	36
37	Space	--	--	0 VA	0 VA					--	--	Space	38
39	Space	--	--			0 VA	0 VA			--	--	Space	40
41	Space	--	--					0 VA	0 VA	--	--	Space	42
			TOTA...	746 VA		1200 VA		1200 VA					
			TOTA...	3 A		5 A		5 A					

LEGEND:

LOAD CLASSIFICATION	CONNECTED...	DEMAND...	ESTIMATED...	PANEL TOTALS	
CONTINUOUS LOADS	0 VA	0.00%	0 VA		
KITCHEN LOADS	0 VA	0.00%	0 VA	TOTAL CONN. LOAD:	3146 VA
LIGHTING LOADS	3125 VA	125.00%	3906 VA	TOTAL EST. DEMAND	3927 VA
MOTOR LOADS	0 VA	0.00%	0 VA	TOTAL CONN....	4 A
NON CONTINUOUS LOADS	0 VA	0.00%	0 VA	TOTAL EST. DEMAN...	5 A
RECEPTACLE LOADS	0 VA	0.00%	0 VA		

NOTES:

Branch Panel: PSL

LOCATION:	ELEC. 1004	VOLTS:	277/480V	A.I.C. RATING:	42K
SUPPLY FROM:	MDB	PHASES:	3	MAINS TYPE:	M.L.O.
MOUNTING:	SURFACE	WIRES:	4	BUS RATING:	100 A
ENCLOSURE:	NEMA 1			MCB RATING:	100 A

NOTES:

CKT	CIRCUIT DESCRIPTION	TRIP	P	A		B		C		P	TRIP	CIRCUIT DESCRIPTION	CKT
1	P3	20 A	3	848 VA	848 VA					3	30 A	P4	2
3	--	--	--			848 VA	848 VA			--	--	--	4
5	--	--	--					848 VA	848 VA	--	--	--	6
7	P1	30 A	3	848 VA	848 VA					3	30 A	P2	8
9	--	--	--			848 VA	848 VA			--	--	--	10
11	--	--	--					848 VA	848 VA	--	--	--	12
13	MCM PANEL	20 A	1	200 VA									14
15													16
17													18
19													20
21													22
23													24
25													26
27													28
29													30
31													32
33													34
35													36
37													38
39													40
41													42
			TOTA...	3592 VA		3392 VA		3392 VA					
			TOTA...	13 A		12 A		12 A					

LEGEND:

LOAD CLASSIFICATION	CONNECTED...	DEMAND...	ESTIMATED...	PANEL TOTALS	
CONTINUOUS LOADS	200 VA	125.00%	250 VA		
KITCHEN LOADS	0 VA	0.00%	0 VA	TOTAL CONN. LOAD:	10376 VA
LIGHTING LOADS	0 VA	0.00%	0 VA	TOTAL EST. DEMAND	10426 VA
MOTOR LOADS	0 VA	0.00%	0 VA	TOTAL CONN....	12 A
NON CONTINUOUS LOADS	10176 VA	100.00%	10176 VA	TOTAL EST. DEMAN...	13 A
RECEPTACLE LOADS	0 VA	0.00%	0 VA		

NOTES:

Switchboard: INV1

LOCATION:	ELEC. 1004	VOLTS:	277V	A.I.C. RATING:	
SUPPLY FROM:	MDB	PHASES:	1	MAINS TYPE:	MCB
MOUNTING:	FLOOR	WIRES:	2	MAINS RATING:	30 A
ENCLOSURE:	NEMA 1			MCB RATING:	30 A

Notes:

CKT	CIRCUIT DESCRIPTION	# OF POLES	TRIP RATING	LOAD	REMARKS
1	EMERGENCY GENERAL LIGHTING	1	20 A	217 VA	
2	OUTDOOR BUILDING LIGHTING (LCP1)	1	20 A	90 VA	
3	ALIC PANEL	1	20 A	200 VA	
4	CANOPY LIGHTING (LCP1)	1	20 A	320 VA	
5	EGRESS LIGHTING BACK BLEACHERS (LCP1)	1	20 A	84 VA	
6	P3/P1 (ALTERNATIVE) VIA ALIC PANEL	1	20 A	1418 VA	
7	P4/P2 (ALTERNATIVE) VIA ALIC PANEL	1	20 A	570 VA	
8	POOL DECK EGRESS LIGHTING (LCP1)	1	20 A	570 VA	
9					
10					
11					
12					
13					
14					
15					
16					
17					
18					
19					
20					
				3469 VA	
				13 A	

Legend:

LOAD CLASSIFICATION	CONNECTED...	DEMAND FACTOR	EST. DEMAND	PANEL TOTALS	
LIGHTING LOADS	1677 VA	125.00%	2096 VA		
				TOTAL CONN. LOAD:	3469 VA
				TOTAL EST. DEMAND:	3938 VA
				TOTAL CONN. CURRENT:	13 A
				TOTAL EST. DEMAND...	14 A

Branch Panel: LPA

LOCATION:	ELEC. 1004	VOLTS:	120/208V	A.I.C. RATING:	14K
SUPPLY FROM:	DP	PHASES:	3	MAINS TYPE:	M.L.O.
MOUNTING:	SURFACE	WIRES:	4	BUS RATING:	100 A
ENCLOSURE:	NEMA1			MCB RATING:	100 A

NOTES:

CKT	CIRCUIT DESCRIPTION	TRIP	P	A		B		C		P	TRIP	CIRCUIT DESCRIPTION	CKT
1	PORTABLE VACUUM PUMP	25 A	1	2200 VA	0 VA					1	20 A	Spare	2
3	OFFICE 1006	20 A	1			1080 VA	0 VA			1	20 A	Spare	4
5	GENERAL OUTLETS	20 A	1					1080 VA	0 VA	1	20 A	Spare	6
7	ELECTRICAL ROOM	20 A	1	180 VA	0 VA					1	20 A	Spare	8
9	RECEPTACLE LOADS	20 A	1			540 VA	0 VA			1	20 A	Spare	10
A&E 11	SPRINKLER BELL	20 A	1					200 VA	0 VA	1	20 A	Spare	12
A&E 13	FATC	20 A	1	200 VA	0 VA					1	20 A	Spare	14
15	CONVENIENT OUTLET AT...	20 A	1			180 VA	0 VA			1	20 A	Spare	16
17	Spare	20 A	1					0 VA	0 VA	1	20 A	Spare	18
19	Spare	20 A	1	0 VA	0 VA					1	20 A	Spare	20
21	Spare	20 A	1			0 VA	0 VA			1	20 A	Spare	22
23	Spare	20 A	1					0 VA	0 VA	1	20 A	Spare	24
25	Spare	20 A	1	0 VA	0 VA					1	20 A	Spare	26
27	Spare	20 A	1			0 VA	0 VA			1	20 A	Spare	28
29	Space	--	--					0 VA	0 VA	--	--	Space	30
31	Space	--	--	0 VA	0 VA					--	--	Space	32
33	Space	--	--			0 VA	0 VA			--	--	Space	34
35	Space	--	--					0 VA	0 VA	--	--	Space	36
37	Space	--	--	0 VA	0 VA					--	--	Space	38
39	Space	--	--			0 VA	0 VA			--	--	Space	40
41	Space	--	--					0 VA	0 VA	--	--	Space	42
			TOTA...	2580 VA		1800 VA		1280 VA					
			TOTA...	22 A		16 A		11 A					

LEGEND:

LOAD CLASSIFICATION	CONNECTED...	DEMAND...	ESTIMATED...	PANEL TOTALS	
CONTINUOUS LOADS	400 VA	125.00%	500 VA		
KITCHEN LOADS	0 VA	0.00%	0 VA	TOTAL CONN. LOAD:	5660 VA
LIGHTING LOADS	0 VA	0.00%	0 VA	TOTAL EST. DEMAND	5760 VA
MOTOR LOADS	0 VA	0.00%	0 VA	TOTAL CONN....	16 A
NON CONTINUOUS LOADS	0 VA	0.00%	0 VA	TOTAL EST. DEMAN...	16 A
RECEPTACLE LOADS	5260 VA	100.00%	5260 VA		

NOTES:

Branch Panel: LPB

LOCATION:	STORAGE 1011	VOLTS:	120/208V	A.I.C. RATING:	14K
SUPPLY FROM:	DP	PHASES:	3	MAINS TYPE:	C.B
MOUNTING:	SURFACE	WIRES:	4	BUS RATING:	100 A
ENCLOSURE:	NEMA1			MCB RATING:	100A

NOTES:

CKT	CIRCUIT DESCRIPTION	TRIP	P	A		B		C		P	TRIP	CIRCUIT DESCRIPTION	CKT
1	ROOM 1014/1017/1007/1016	20 A	1	720 VA	693 VA					1	20 A	GENERAL LIGHTING	2
3	ROOM 1008/1009/1010/1013	20 A	1			720 VA	371 VA			1	20 A	INV2	4
A&E 5	FACP	20 A	1					200 VA	0 VA	1	20 A	Spare	6
A&E 7	FAPS	20 A	1	200 VA	0 VA					1	20 A	Spare	8
A 9	MECHANICAL DDC	20 A	1			200 VA	0 VA			1	20 A	Spare	10
11	HP-3	20 A	2					1560 VA	0 VA	1	20 A	Spare	12
13	--	--	--	1560 VA	0 VA					1	20 A	Spare	14
15	EF-5 &EF-6	15 A	1			612 VA	0 VA			1	20 A	Spare	16
17	EF-7	15 A	1					924 VA	0 VA	1	20 A	Spare	18
19	CONVENIENCE ROOF OUTLET	20 A	1	180 VA	0 VA					1	20 A	Spare	20
21	ETP-1/CP-1	20 A	1			540 VA	0 VA			1	20 A	Spare	22
23	EWH-1	25 A	3					2000 VA	0 VA	1	20 A	Spare	24
25	--	--	--	2000 VA	0 VA					1	20 A	Spare	26
27	--	--	--			2000 VA	0 VA			1	20 A	Spare	28
29	STORAGE 1011	20 A	1					540 VA	0 VA	1	20 A	Spare	30
31	RECEPTACLE LOADS	20 A	1	360 VA	0 VA					--	--	Space	32
33	EF-8 & EF-9	15 A	1			1056 VA	0 VA			--	--	Space	34
35	DATA RACK	30 A	2					0 VA	0 VA	--	--	Space	36
37	--	--	--	1500 VA	0 VA					--	--	Space	38
39	Spare	20 A	1			0 VA	0 VA			--	--	Space	40
41	Spare	20 A	1					0 VA	0 VA	--	--	Space	42
			TOTA...	7213 VA		5499 VA		5224 VA					
			TOTA...	60 A		46 A		44 A					

LEGEND:

LOAD CLASSIFICATION	CONNECTED...	DEMAND...	ESTIMATED...	PANEL TOTALS	
CONTINUOUS LOADS	2460 VA	125.00%	3075 VA		
KITCHEN LOADS	0 VA	0.00%	0 VA	TOTAL CONN. LOAD:	17936 VA
LIGHTING LOADS	904 VA	125.00%	1130 VA	TOTAL EST. DEMAND	18777 VA
MOTOR LOADS	5892 VA	100.00%	5892 VA	TOTAL CONN....	50 A
NON CONTINUOUS LOADS	6000 VA	100.00%	6000 VA	TOTAL EST. DEMAN...	52 A
RECEPTACLE LOADS	2520 VA	100.00%	2520 VA		

NOTES:

Branch Panel: LPM

LOCATION:	ELEC. 1004	VOLTS:	120/208V	A.I.C. RATING:	14K
SUPPLY FROM:	DP	PHASES:	3	MAINS TYPE:	M.L.O.
MOUNTING:	SURFACE	WIRES:	4	BUS RATING:	100 A
ENCLOSURE:	NEMA1			MCB RATING:	100 A

NOTES:

CKT	CIRCUIT DESCRIPTION	TRIP	P	A		B		C		P	TRIP	CIRCUIT DESCRIPTION	CKT
H 1	HP-1	20 A	2	1560 VA	2080 VA					2	30 A	HP-2	2 H
3	--	--	--			1560 VA	2080 VA			--	--	--	4
5	EF-1	15 A	3					348 VA	348 VA	3	15 A	EF-2	6
7	--	--	--	348 VA	348 VA					--	--	--	8
9	--	--	--			348 VA	348 VA			--	--	--	10
11	EF-3	15 A	3					420 VA	1176 VA	1	20 A	EF-4	12
13	--	--	--	420 VA	360 VA					1	15 A	ETP-2/EPT-3	14
15	--	--	--			420 VA	380 VA			1	20 A	GWH-1/CP-1	16
17	DDC-1	20 A	1					200 VA	0 VA	1	20 A	Spare	18
19	Spare	20 A	1	0 VA	0 VA					1	20 A	Spare	20
21	Spare	20 A	1			0 VA	0 VA			1	20 A	Spare	22
23	Spare	20 A	1					0 VA	0 VA	1	20 A	Spare	24
25	Space	--	--	0 VA	0 VA					--	--	Space	26
27	Space	--	--			0 VA	0 VA			--	--	Space	28
29	Space	--	--					0 VA	0 VA	--	--	Space	30
31	Space	--	--	0 VA	0 VA					--	--	Space	32
33	Space	--	--			0 VA	0 VA			--	--	Space	34
35	Space	--	--					0 VA	0 VA	--	--	Space	36
37	Space	--	--	0 VA	0 VA					--	--	Space	38
39	Space	--	--			0 VA	0 VA			--	--	Space	40
41	Space	--	--					0 VA	0 VA	--	--	Space	42
			TOTA...	5116 VA		5136 VA		2492 VA					
			TOTA...	46 A		46 A		21 A					

LEGEND:

LOAD CLASSIFICATION	CONNECTED...	DEMAND...	ESTIMATED...	PANEL TOTALS	
CONTINUOUS LOADS	560 VA	125.00%	700 VA		
KITCHEN LOADS	0 VA	0.00%	0 VA	TOTAL CONN. LOAD:	12744 VA
LIGHTING LOADS	0 VA	0.00%	0 VA	TOTAL EST. DEMAND	12884 VA
MOTOR LOADS	11984 VA	100.00%	11984 VA	TOTAL CONN....	35 A
NON CONTINUOUS LOADS	200 VA	100.00%	200 VA	TOTAL EST. DEMAN...	36 A
RECEPTACLE LOADS	0 VA	0.00%	0 VA		

NOTES:

GENERAL PANEL SCHEDULE NOTES:

1. WHERE PANEL IS INDICATED TO INCLUDE FEED THRU LUGS, PROVIDE FEED THROUGH LUGS AT THE OPPOSITE END OF THE PANELBOARD FROM THE PANELBOARD MAIN LUGS.
2. WHERE PANEL IS INDICATED TO INCLUDE DOUBLE LUGS, PROVIDE A DOUBLE LUG KIT AT THE SAME END OF THE PANELBOARD AS THE PANELBOARD MAIN LUGS.
3. WHERE PANEL IS INDICATED TO INCLUDE 200% NEUTRAL, PROVIDE PANELBOARDS UL LISTED AS HAVING NEUTRAL BUSSES RATED TO CARRY 200 PERCENT OF THE CURRENT CARRYING CAPACITY OF THE PHASE BUSSING. OTHERWISE, NEUTRAL BUSSING TO BE FULL SIZE AND RECTANGULAR.
4. WHERE PANEL IS INDICATED TO INCLUDE AN I/G BUS, PROVIDE PANELBOARDS WITH AN ISOLATED GROUND BUS, DRILLED AND TAPPED FOR NUMBER OF ISOLATED GROUND CONDUCTORS SHOWN, AS WELL AS FOR ALL SPARES AND SPACES SHOWN ON THE PANELBOARD.
5. WHERE PANEL CIRCUIT BREAKER RATING IS SHOWN AS SERIES RATED, PROVIDE CIRCUIT BREAKERS IN PANELBOARD WHICH ARE SERIES RATED WITH THE UPSTREAM SYSTEM FOR THE AVAILABLE FAULT CURRENT. THE PANELBOARD SHALL BE MARKED WITH THE SERIES CONNECTED RATINGS, AS WELL AS ALL MARKING AS REQUIRED BY THE CEC WHERE ADOPTED, 240-83(C).
6. WHERE PANEL IS INDICATED AS RECESSED OR FLUSH MOUNTED, PROVIDE SPARE CONDUITS STUBBED UP INTO THE ACCESSIBLE CEILING SPACE. PROVIDE ONE (1) 3/4" CONDUIT ONLY FOR EACH THREE (3) SPARES OR SPACES, MINIMUM OF TWO (2). EACH CONDUIT SHALL BE TAGGED, CAPPED AND MARKED FOR FUTURE USE.
7. ALL BUSSING SHALL BE COPPER.
8. ALL CIRCUIT BREAKERS USED AS SWITCHES SHALL BE UL LISTED AND LABELED "SWD" FOR SWITCHING DUTY.
9. ALL CIRCUIT BREAKERS USED TO SERVE MECHANICAL OR HEATING EQUIPMENT SHALL BE UL LISTED AND LABELED "HACR" FOR USE WITH THESE LOADS, WHERE REQUIRED.
10. ALL CIRCUIT BREAKERS SHALL BE BOLT-ON TYPE AND SHALL BE SUITABLE FOR 75 DEGREE AMPACITY CONDUCTORS.
11. PANELS SHALL BE OF THE DEAD FRONT SAFETY TYPE. PANELS SHALL BE MINIMUM 20" WIDE AND 5 3/4" DEEP UNLESS OTHERWISE NOTED ON PLAN.
12. COORDINATE WITH APPLICABLE TRADE TO INSURE RECESSED MOUNTED PANELBOARDS WILL SEAT FLUSH IN THE WALLS PROVIDED. PANEL TRIMS SHALL HAVE CONCEALED DOORS AND FASTENERS WITH FLUSH TYPE COMBINATION LOCK AND CATCH, TWO MILLED TYPE KEYS SUPPLIED WITH EACH PANEL. ALL LOCKS SHALL BE KEYED ALIKE AND EACH DOOR SHALL HAVE A PLASTIC COVERED DIRECTORY FRAME WITH A TYPED IDENTIFICATION CARD OF ALL CIRCUIT AND PANEL NUMBERS FOR BRANCH CIRCUIT PANELBOARDS.
13. UPON PROJECT COMPLETION, CONTRACTOR SHALL INSTALL TYPED AS-BUILT PANEL DIRECTORIES IN EACH PANEL WITHIN THE MFGR-PROVIDED DIRECTORY HOLDER. DIRECTORIES SHALL CONSIST OF LOAD DESCRIPTION AND CIRCUIT NUMBER FOR EACH CIRCUIT BASED ON AS-BUILT PANEL SCHEDULES. HANDWRITTEN DIRECTORIES ARE UNACCEPTABLE. LOCAL AHJ MAY REQUIRE COPIES OF ENGINEERED PANEL SCHEDULES BE PLACED IN PANEL DIRECTORIES. E.C. TO VERIFY REQUIREMENTS PRIOR TO BID AND INCLUDE ALL COSTS REQUIRED FOR LARGER-THAN-STANDARD CUSTOM PANEL DIRECTORY HOLDERS TO ACCOMMODATE COPIES OF ENGINEERED PANEL SCHEDULES.
14. PANELBOARDS SHALL BE MANUFACTURED BY G.E., CUTLER-HAMMER, SIEMENS, OR SQUARE "D".
15. PROVIDE SHOP DRAWING SUBMITTAL PER THE ELECTRICAL SPECIFICATION SUBMITTAL REQUIREMENTS FOR EACH PANEL DEPICTING CONFORMANCE WITH THE ABOVE NOTES AND SCHEDULES.

SPECIFIC PANEL SCHEDULE NOTES:

"A" PROVIDE LOCK-ON DEVICE
"B" PROVIDE LOCK-OFF DEVICE
"C" PROVIDE SHUNT TRIP DEVICE
"D" PROVIDE GFCI TYPE DEVICE.
"E" PROVIDE A RED CIRCUIT FIRE ALARM BREAKER. SEE SHEET FA0.03, KEYNOTE #6.
"F" PROVIDE A NEW BREAKER TO MATCH THE EXISTING IN PANEL.
"G" PROVIDE BREAKER INTERLOCK WITH ADJACENT BREAKER. BREAKER INTERLOCK GROUPING SHALL BE BY BRANCH CIRCUIT GROUP (i.e. MULTIPLE CIRCUITS ON A COMMON YOKE NEC 210.4(B) FURNITURE SYSTEM NEC 605.7)
"H" PROVIDE HACR BREAKER
"J" EXISTING BREAKER WITH NEW LOAD

MDB	DP	HLA	PSL
INV1	LPA	LPB	
LPM			NOTES

IDENTIFICATION STAMP
DIV. OF THE STATE ARCHITECT
APP: 02-119490 INC:
REVIEWED FOR
SS ☑ FLS ☑ ACS ☑
DATE: 09/13/2022

LPA

ARCHITECTURE ENGINEERING INTERIORS
LANDSCAPE ARCHITECTURE PLANNING

916-287-2400 Office
916-287-2401 Fax
LPADesignStudios.com
431 I Street,
Suite 107
Sacramento, California 95814

REGISTERED PROFESSIONAL ENGINEER STEPHEN BAKAN E-17415 9/30/23 ELECTRICAL STATE OF CALIFORNIA

This document and all other project documents, ideas, aesthetics and designs incorporated therein are instruments of service. All project documents are copyright protected, are the property of LPA, Inc. (LPA) and cannot be lawfully used in whole or in part for any project or purpose except as set forth in the contractual agreement between LPA and its Client. The unauthorized disclosure and/or use of the project documents (including the creation of derivative works), may give rise to liability for copyright infringement, unlawful disclosure, use or misappropriation of property rights held by LPA. The unauthorized use of the project documents will give rise to the recovery of monetary losses and damages including attorney fees and costs for which the unauthorized user will be held liable.
Project documents describe the design intent of the work and are not a representation of as-built or existing conditions. LPA is not responsible for any discrepancies between the project documents and the existing conditions.

© LPA, Inc.

DAVIS SENIOR HIGH SCHOOL
NEW AQUATICS CENTER
315 W 14TH ST., DAVIS, CA 95616

Developed for
DAVIS JOINT UNIFIED SCHOOL DISTRICT

Revision	Date

Submittal	Date
50% DESIGN DEVELOPMENT	06/15/2021
100% DD SUBMITTAL	07/26/2021
50% CD REVIEW	10/08/2021
100% CD DSA SUBMITTAL	10/22/2021
DSA SUBMITTAL	03/24/2022

Job Number	1904413
Date Published	03/24/2022
Checked By	LPA
Scale	

PANEL SCHEDULES

E5.02

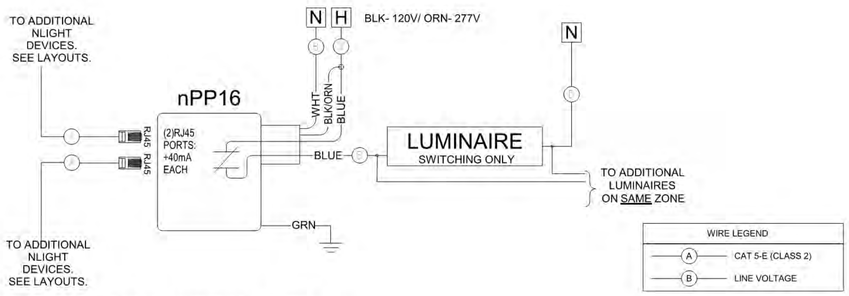

TYPICAL WIRING DIAGRAM: NPP16

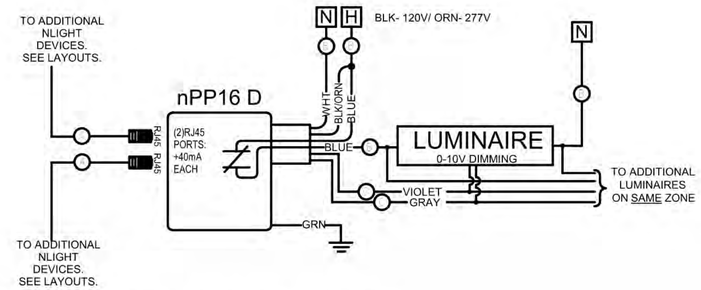

TYPICAL WIRING DIAGRAM: NPP16 D

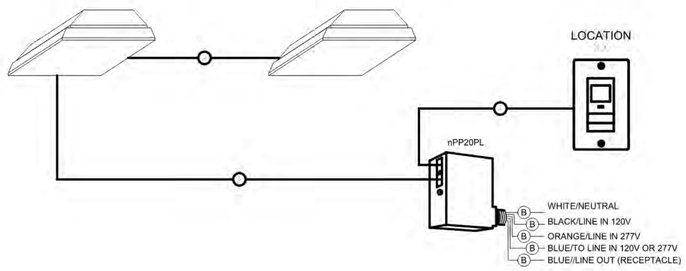

TYPICAL PRIVATE OFFICE WITH ENABLED FIXTURES

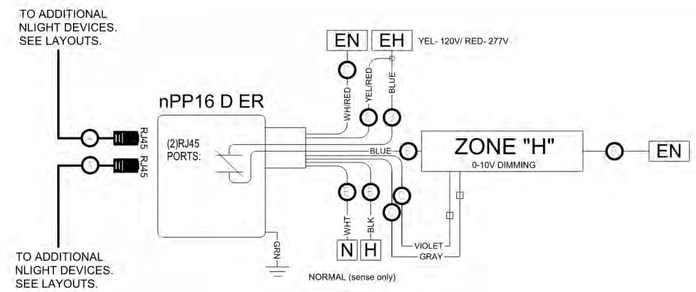

TYPICAL WIRING DIAGRAM: NPP16 D ER

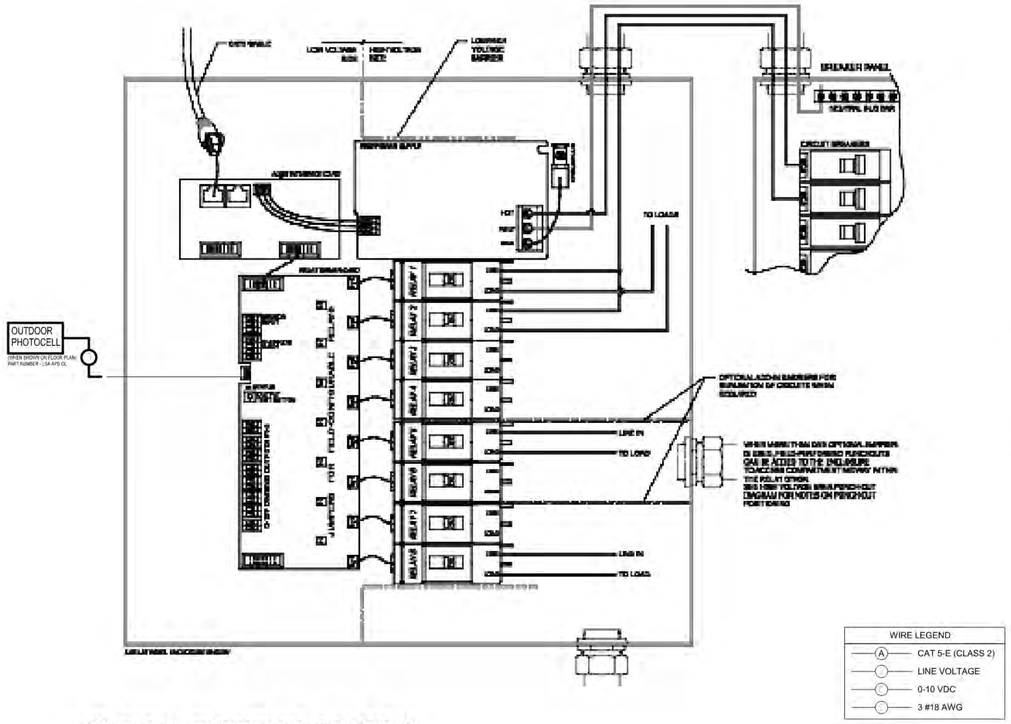

TYPICAL EXTERIOR CONTROL

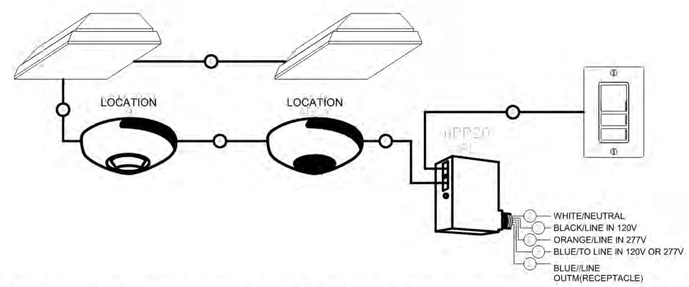

TYPICAL OFFICE W/ ENABLED FIXTURES AND DAYLIGHT HARVESTING

GENERAL NOTES:

1. MOTION SENSORS MUST BE PROGRAMMED AS EITHER AUTO ON BETWEEN 50% AND 70% OR AS VACANCY SENSORS.
2. NETWORK AND NADR (AUTOMATIC DEMAND RESPONSE) DEVICES ARE REQUIRED FOR BUILDINGS OVER 10,000 SQ. FT. AND IS .5 WATTS PER SQ. FT. OR MORE.
3. PRODUCTS CAN MEET ANY AND ALL TITLE 24 2019 REQUIREMENTS WHEN CONFIGURED CORRECTLY.
4. MANUFACTURER OR MANUFACTURER AGENT MUST PROVIDE SHOP DRAWINGS FOR APPROVAL. FOR ASSISTANCE WITH CONTROLS LAYOUT AND SUBMITTALS CONTACT PERFORMANCE LIGHTING SYSTEMS AT (949) 878-9000.

FOR ADDITIONAL TECH SUPPORT AND INSTALLATION INFORMATION PLEASE CALL 1.800.535.2465

IDENTIFICATION STAMP
DIV. OF THE STATE ARCHITECT
APP: 02-119490 INC:
REVIEWED FOR
SS ☑ FLS ☑ ACS ☑
DATE: 09/13/2022

LPA
ARCHITECTURE ENGINEERING INTERIORS
LANDSCAPE ARCHITECTURE PLANNING

916-287-2400 Office
916-287-2401 Fax
LPADesignStudios.com
431 I Street,
Suite 107
Sacramento, California 95814

REGISTERED PROFESSIONAL ENGINEER
STEPHEN BARR
E-17415
9/30/23
ELECTRICAL
STATE OF CALIFORNIA

This document and all other project documents, ideas, aesthetics and designs incorporated therein are instruments of service. All project documents are copyright protected, are the property of LPA, Inc. (LPA) and cannot be lawfully used in whole or in part for any project or purpose except as set forth in the contractual agreement between LPA and its Client. The unauthorized disclosure and/or use of the project documents (including the creation of derivative works), may give rise to liability for copyright infringement, unlawful disclosure, use or misappropriation of property rights held by LPA. The unauthorized use of the project documents will give rise to the recovery of monetary losses and damages including attorney fees and costs for which the unauthorized user will be held liable.
Project documents describe the design intent of the work and are not a representation of as-built or existing conditions. LPA is not responsible for any discrepancies between the project documents and the existing conditions.

© LPA, Inc.

DAVIS SENIOR HIGH SCHOOL
NEW AQUATICS CENTER
315 W 14TH ST., DAVIS, CA 95616

Developed for
DAVIS JOINT UNIFIED SCHOOL DISTRICT

Revision	Date

Submittal	Date
50% DESIGN DEVELOPMENT	06/15/2021
100% DD SUBMITTAL	07/26/2021
50% CD REVIEW	10/08/2021
100% CD DSA SUBMITTAL	10/22/2021
DSA SUBMITTAL	02/24/2022

Job Number	1904413
Date Published	03/24/2022
Checked By	LPA
Scale	

LIGHTING CONTROL DIAGRAMS AND DETAILS

E6.01

IDENTIFICATION STAMP
DIV. OF THE STATE ARCHITECT
APP: 02-119490 INC:
REVIEWED FOR
SS ☑ FLS ☑ ACS ☑
DATE: 09/13/2022

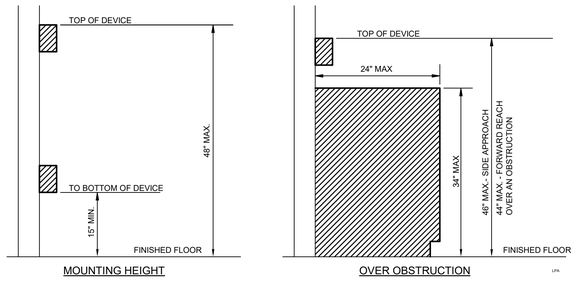

ADA DEVICE MOUNTING | 12" = 1'-0" | 19

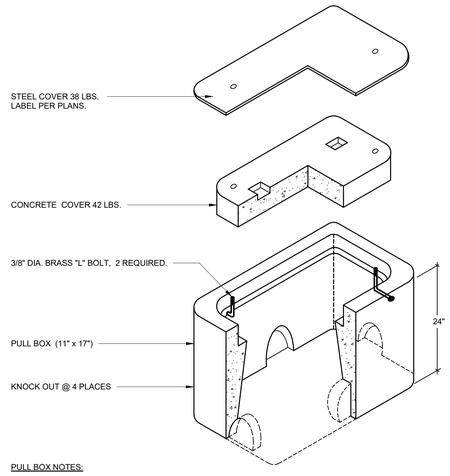

PULL BOX NOTES:

1. ALL BOXES SHALL BE SET ON A MINIMUM 8" GRAVEL BASE WITH 1/2" DIAMETER GRAVEL AND RATED FOR H20 LOANDING.
2. ALL INCIDENTAL CONCRETE SHALL BE REMOVED FROM BOXES.
3. ALL CONDUITS SHALL HAVE RIGID STEEL RISERS TERMINATING 4" BELOW THE COVER OF THE PULL BOX.
4. THE RIGID STEEL SHALL BE WRAPPED W/2", HALF-LAPPED 3M INSULATING TAPE OR APPROVED BITUMINOUS COATING (ALL SURFACES). SUBMIT METHOD FOR APPROVAL.
5. PROVIDE WATERTIGHT SPLICES AND CAPS FOR COMMUNICATION AND POWER CONDUCTORS.
6. PROVIDE SEALING GEL IN ALL CONDUITS (BOTH W/ CONDUCTORS AND IN EMPTY SPARE CONDUITS.) THE GEL SHALL BE INSERTED IN THE CONDUIT TO A DEPTH OF 6" AND FLUSH WITH THE END OF THE CONDUIT. THE GEL SHALL BE MANUFACTURED BY WATERGUARD INDUSTRIES ONLY.
7. PROVIDE IDENTIFYING TAGS ON ALL POWER AND COMMUNICATION CONDUCTORS IN PULL BOXES.
8. SEE PULL-BOX/MAN-HOLE GROUNDING DETAIL FOR ADDITIONAL GROUNDING INFORMATION.

11x17 PULL BOX | 1" = 1'-0" | 11

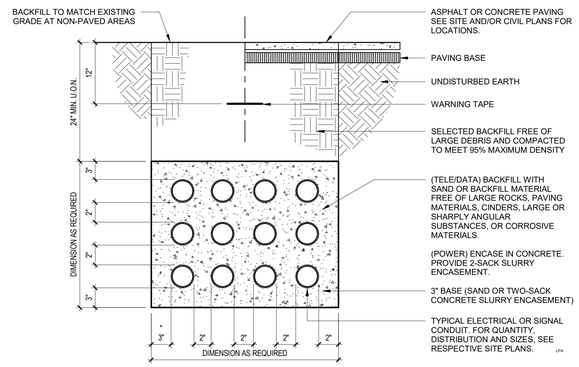

UNDERGROUND DUCTBANK SECTION (DIRECT BURIAL) | 12" = 1'-0" | 03

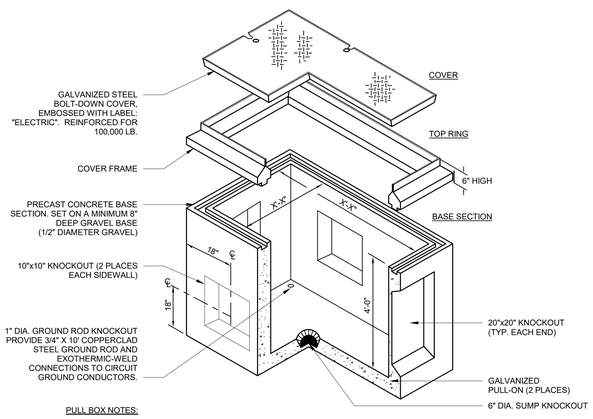

PULL BOX NOTES:

1. ALL BOXES SHALL BE SET ON A MINIMUM 12" GRAVEL BASE WITH 3/8"-3/4" DIAMETER GRAVEL AND RATED FOR H20 LOANDING
2. ALL INCIDENTAL CONCRETE SHALL BE REMOVED FROM BOXES.
3. PROVIDE SEALING GEL IN ALL CONDUITS (BOTH W/ CONDUCTORS AND IN EMPTY SPARE CONDUITS). THE GEL SHALL BE INSERTED IN THE CONDUIT TO A DEPTH OF 6" AND FLUSH W/ THE END OF THE CONDUIT. THE GEL SHALL BE MANUFACTURED BY 3M #4442 RE-ENTERABLE ENCAPSULANT.
4. PROVIDE IDENTIFYING TAGS ON ALL CONDUCTORS IN PULL-BOXES.
5. HAND-HOLES SHALL BE PROVIDED WITH MINIMUM OF (4) GALVANIZED PULLING PLATES IN BOTTOM OF PULL-BOX.
6. PULL-BOXES SHALL BE PROVIDED WITH CAST IN PLACE VERTICAL CABLE RACKS. ALL CABLES SHALL BE NEATLY BUNDLED, ORGANIZED AND SUPPORTED BY CABLE RACKS.
7. ALL "SPARE" OR UNUSED CONDUITS TO BE LOCATED ON TOP.
8. PULL-BOX DIMENSIONS PER DRAWINGS

3'x5' PULL BOX | 1" = 1'-0" | 17

(*) GROUNDING ELECTRODE CONDUCTOR SHALL BE SIZED AS FOLLOWS: SEE RESPECTIVE SYSTEM/DEVICE SCHEDULE FOR G.E.C. SIZE.

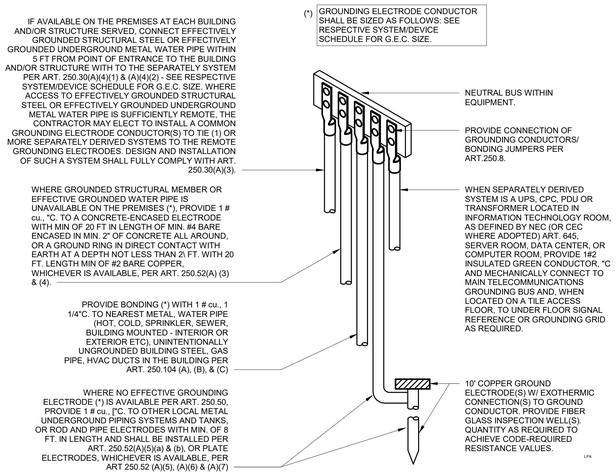

SEPARATELY DERIVED SYSTEM GROUND | N.T.S. | 09

***	TELECOMMUNICATIONS GROUND CONDUCTOR MINIMUM SIZE SHALL BE BASED ON DISTANCE BETWEEN TELECOMMUNICATIONS ROOM AND SYSTEM GROUNDING BUS BAR AS FOLLOWS:
	0-200 FT. #1/0
	OVER 200 FT. #3/0
	MAIN BONDING JUMPER SHALL BE SIZED AS FOLLOWS:
	SERVICE SIZE — M.B.J. SIZE
	0-1,000A #3/0
	1,200A #4/0
**	1,600A #250KCMIL
	2,000A #300KCMIL
	2,500A #500KCMIL
	3,000A #500KCMIL
	4,000A #600KCMIL
	GROUNDING ELECTRODE CONDUCTOR SHALL BE SIZED AS FOLLOWS:
*	SERVICE SIZE — G.E.C. SIZE
	0-200A #4
	201-400A #1/0
	OVER 401A #3/0

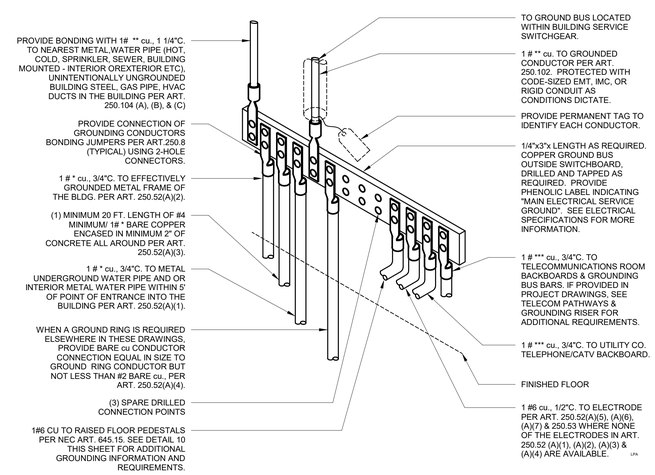

MAIN SYSTEM GROUND BUS - MSGB | N.T.S. | 01

LPA
ARCHITECTURE ENGINEERING INTERIORS
LANDSCAPE ARCHITECTURE PLANNING
916-287-2400 Office
916-287-2401 Fax
LPADesignStudios.com
431 I Street,
Suite 107
Sacramento, California 95814

REGISTERED PROFESSIONAL ENGINEER STEPHEN BARR E-17415 9/30/23 ELECTRICAL STATE OF CALIFORNIA

This document and all other project documents, ideas, aesthetics and designs incorporated therein are instruments of service. All project documents are copyright protected, are the property of LPA, Inc. (LPA) and cannot be lawfully used in whole or in part for any project or purpose except as set forth in the contractual agreement between LPA and its Client. The unauthorized disclosure and/or use of the project documents (including the creation of derivative works), may give rise to liability for copyright infringement, unlawful disclosure, use or misappropriation of property rights held by LPA. The unauthorized use of the project documents will give rise to the recovery of monetary losses and damages including attorney fees and costs for which the unauthorized user will be held liable.
Project documents describe the design intent of the work and are not a representation of as-built or existing conditions. LPA is not responsible for any discrepancies between the project documents and the existing conditions.
© LPA, Inc.

DAVIS SENIOR HIGH SCHOOL
NEW AQUATICS CENTER
315 W 14TH ST., DAVIS, CA 95616

Developed for
DAVIS JOINT UNIFIED SCHOOL DISTRICT

Revision	Date

Submittal	Date
50% DESIGN DEVELOPMENT	06/15/2021
100% DD SUBMITTAL	07/26/2021
50% CD REVIEW	10/08/2021
100% CD DSA SUBMITTAL	10/22/2021
DSA SUBMITTAL	03/24/2022

Job Number	1904413
Date Published	03/24/2022
Checked By	LPA
Scale	

ELECTRICAL DETAILS

E7.01

IDENTIFICATION STAMP
DIV. OF THE STATE ARCHITECT
APP: 02-119490 INC:
REVIEWED FOR
SS ☑ FLS ☑ ACS ☑
DATE: 09/13/2022

CKT NO	ACCESSORIES	TYPE	RATING AMP/P	PHASE BUS CONN
	4.50" BLANK			
	4.50" BLANK			
	1.50" BLANK			
5	3 4	2	1/3	A B C
	BRANCH MOUNTED MAIN	LA	400/3	A B C

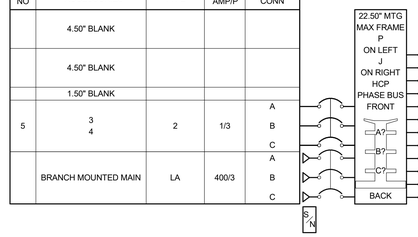

PHASE BUS CONN	RATING AMP/P	TYPE	ACCESSORIES	CKT NO
			4.50" BLANK	
C B A	100/3	QD		2
C B A	125/3	QD		4
C B A	175/3	JJ		6
C B A	200/3	QD		8

REFER TO STRUCTURAL DETAIL 11/S6.91 FOR ANCHORAGE INFORMATION FOR WALL MOUNTED ELECTRICAL EQUIPMENT.

PHYSICAL DATA

ENCLOSURE Type 1
Surface with Door
FRONT CAT#: HCW59TSD
BOX CAT#: HC4259DB
DIMENSIONS:
59"(1499mm)Hx42"(1067mm)Wx9.5"(241mm)D
WIRE BENDING SPACE:
TOP - 11.66"(296mm)
BOTTOM - 17.50"(445mm)
LEFT SIDE - 8.66"(220mm)
RIGHT SIDE - 8.77"(223mm)
PBA: 418
BUSSING: 400A RATED COPPER BUS
Tin Plated
OPTIONAL FEATURES:
SEISMICALLY QUALIFIED : IBC/ASCE7/CBC/NBCC
BRANCH USER PLACEMENT
Copper GROUND BAR
COPPER SOLID NEUTRAL
Maximum Panel Weight 554.

ELECTRICAL DATA

SYSTEM: 208Y/120V 3Ph 4W 60Hz
System Ampacity: 400A
22kA SYMS. SCCR
MAIN: MAIN BREAKER LA 400A
ACC: EM3555 Modbus with Logging
Bottom FEED
42kA AIR
INCOMING CONDUCTORS(S) PER NEC, CEC, NOM:
Wire Bending Space:
Phase Lugs:1 - #1 - 600,(2)#1 - 250 kcml
----------BRANCH SUMMATION----------
1 - 100A/3P QD
1 - 125A/3P QD
1 - 175A/3P JJ
1 - 200A/3P QD

Depth Center of Gravity 9.5
Elevation Center of Gravity 29.5
Vertical Center of Gravity 21.0
I-LINE EXPANDED NEUTRAL

DP PANEL | NTS | 03

CKT NO	ACCESSORIES	TYPE	RATING AMP/P	PHASE BUS CONN
	4.50" BLANK			
	4.50" BLANK			
	4.50" BLANK			
	4.50" BLANK			
	4.50" BLANK			
	1.50" BLANK			
1		BJ	100/3	A
3	PS 4.50" FP	BJ	100/3	A B C
5	3 4	2	1/3	6 7 8

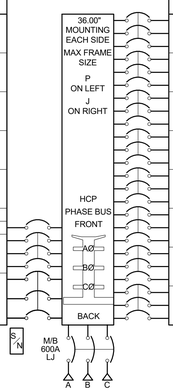

PHASE BUS CONN	RATING AMP/P	TYPE	ACCESSORIES	CKT NO
C B A	100/3	BJ	PS 4.50" FP	2
C B A	100/3	BJ	PS 4.50" FP	4
C B A	100/3	BJ	PS 4.50" FP	6
C B A	100/3	BJ		8
C B A	125/3	BJ		10
C B A	150/3	HJ		12
C B A	150/3	HJ		14
C B A	200/3	JJ		16

REFER TO STRUCTURAL DETAIL 11/S6.91 FOR ANCHORAGE INFORMATION FOR WALL MOUNTED ELECTRICAL EQUIPMENT.

PHYSICAL DATA

ENCLOSURE Type 1
Surface with Door
FRONT CAT#: HCW86TSD
BOX CAT#: HC4286DB
DIMENSIONS:
86"(2184mm)Hx42"(1067mm)Wx9.5"(286mm)D
WIRE BENDING SPACE:
TOP - 11.66"(296mm)
BOTTOM - 16.18"(411mm)
LEFT SIDE - 8.66"(220mm)
RIGHT SIDE - 8.77"(223mm)
PBA: 420
BUSSING: 600A RATED COPPER BUS
Tin Plated
OPTIONAL FEATURES:
SEISMICALLY QUALIFIED : IBC/ASCE7/CBC/NBCC
BRANCH USER PLACEMENT
Copper GROUND BAR
COPPER SOLID NEUTRAL
Maximum Panel Weight 808.

ELECTRICAL DATA

SYSTEM: 480Y/277V 3Ph 4W 60Hz
System Ampacity: 600A
65kA SYMS. SCCR
MAIN: MAIN BREAKER LJ 600AS/600AT
ACC: STD LI 80%
ACC: EM3555 Modbus with Logging
Bottom FEED
65kA AIR
INCOMING CONDUCTORS(S) PER NEC, CEC, NOM:
Wire Bending Space:
Phase Lugs:1 - (2) 2/0 - 500 kcmil
----------BRANCH SUMMATION----------
1 - 30A/1P BJ
4 - 100A/3P-PS BJ
1 - 100A/3P BJ
1 - 125A/3P BJ
2 - 150A/3P HJ
1 - 200A/3P JJ

Depth Center of Gravity 9.5
Elevation Center of Gravity 43.0
Vertical Center of Gravity 21.0

MDB MAIN DISTRIBUTION BOARD | NTS | 13

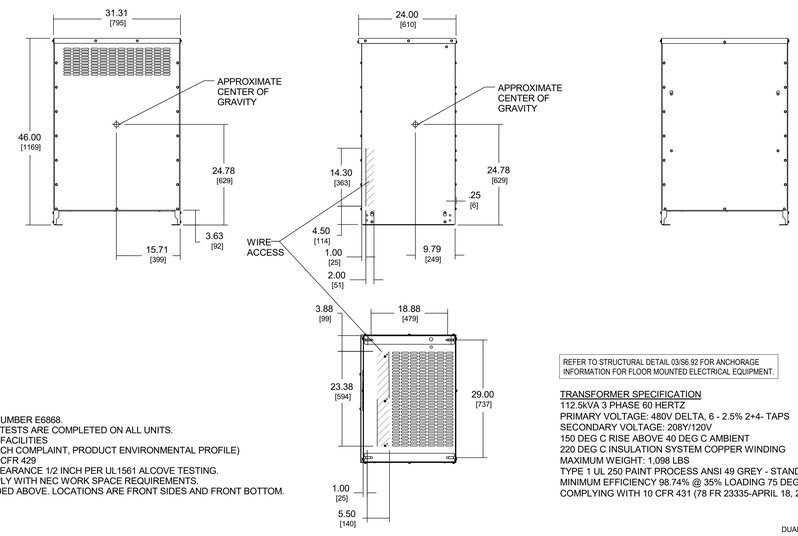

NOTES:
UL LISTED TO UL1561, FILE NUMBER E6868.
NEMA ST-20 (2014) ROUTINE TESTS ARE COMPLETED ON ALL UNITS.
MANUFACTURED IN ISO9001 FACILITIES
GREEN PREMIUM (RoHS/REACH COMPLAINT, PRODUCT ENVIRONMENTAL PROFILE)
REGISTERED TO DOE VIA 10 CFR 429
MINIMUM SIDE AND REAR CLEARANCE 1/2 INCH PER UL1561 ALCOVE TESTING.
FRONT ACCESS MUST COMPLY WITH NEC WORK SPACE REQUIREMENTS.
WIRE ACCESS SHOWN SHADED ABOVE. LOCATIONS ARE FRONT SIDES AND FRONT BOTTOM.

REFER TO STRUCTURAL DETAIL 03/S6.92 FOR ANCHORAGE INFORMATION FOR FLOOR MOUNTED ELECTRICAL EQUIPMENT.

TRANSFORMER SPECIFICATION
112.5kVA 3 PHASE 60 HERTZ
PRIMARY VOLTAGE: 480V DELTA, 6 - 2.5% 2+4- TAPS
SECONDARY VOLTAGE: 208Y/120V
150 DEG C RISE ABOVE 40 DEG C AMBIENT
220 DEG C INSULATION SYSTEM COPPER WINDING
MAXIMUM WEIGHT: 1,098 LBS
TYPE 1 UL 250 PAINT PROCESS ANSI 49 GREY - STANDARD
MINIMUM EFFICIENCY 98.74% @ 35% LOADING 75 DEG C
COMPLYING WITH 10 CFR 431 (78 FR 23335-APRIL 18, 2013)

DUAL DIMENSIONS: INCHES
MILLIMETERS

112.5kVA TRANSFORMER | NTS | 01

LPA
ARCHITECTURE ENGINEERING INTERIORS
LANDSCAPE ARCHITECTURE PLANNING
916-287-2400 Office
916-287-2401 Fax
LPADesignStudios.com
431 I Street,
Suite 107
Sacramento, California 95814

REGISTERED PROFESSIONAL ENGINEER
STEPHEN BAKER
E-17415
9/30/23
ELECTRICAL
STATE OF CALIFORNIA

This document and all other project documents, ideas, aesthetics and designs incorporated therein are instruments of service. All project documents are copyright protected, are the property of LPA, Inc. (LPA) and cannot be lawfully used in whole or in part for any project or purpose except as set forth in the contractual agreement between LPA and its Client. The unauthorized disclosure and/or use of the project documents (including the creation of derivative works), may give rise to liability for copyright infringement, unlawful disclosure, use or misappropriation of property rights held by LPA. The unauthorized use of the project documents will give rise to the recovery of monetary losses and damages including attorney fees and costs for which the unauthorized user will be held liable.
Project documents describe the design intent of the work and are not a representation of as-built or existing conditions. LPA is not responsible for any discrepancies between the project documents and the existing conditions.

© LPA, Inc.

DAVIS SENIOR HIGH SCHOOL
NEW AQUATICS CENTER
315 W 14TH ST., DAVIS, CA 95616

Developed for
DAVIS JOINT UNIFIED SCHOOL DISTRICT

Revision	Date

Submittal	Date
50% DESIGN DEVELOPMENT	06/15/2021
100% DD SUBMITTAL	07/26/2021
50% CD REVIEW	10/08/2021
100% CD DSA SUBMITTAL	10/22/2021
DSA SUBMITTAL	03/24/2022

Job Number	1904413
Date Published	03/24/2022
Checked By	LPA
Scale	As indicated

ELECTRICAL DETAILS

E7.02

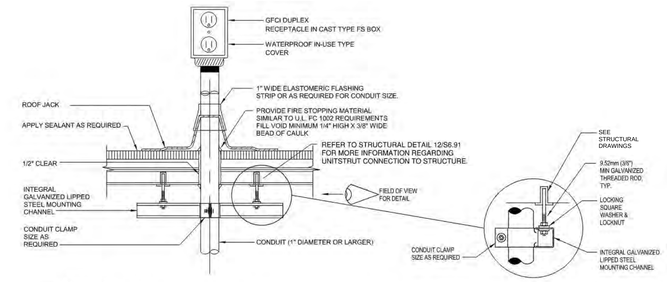

DETAIL NOTES:

1. SIMILAR TO U.L. FIRE RESISTANCE DIRECTORY SYSTEM F-C-1002.
2. COORDINATE MATERIALS AND INSTALLATION AND OBTAIN APPROVAL OF THE INSTALLATION FROM THE ROOFING CONTRACTOR, GENERAL CONTRACTOR, AND THE CITY OF FAIRFIELD ROOFING CONSULTANT.
3. ANCHOR UNISTRUT TO BEAMS TO SUPPORT THE CONDUIT. REFER TO STRUCTURAL DETAIL 12/S6.91 FOR MORE INFORMATION.

EQUIPMENT MOUNTED SWITCH / RECEPTACLE MOUNTING DETAIL | NTS | 04

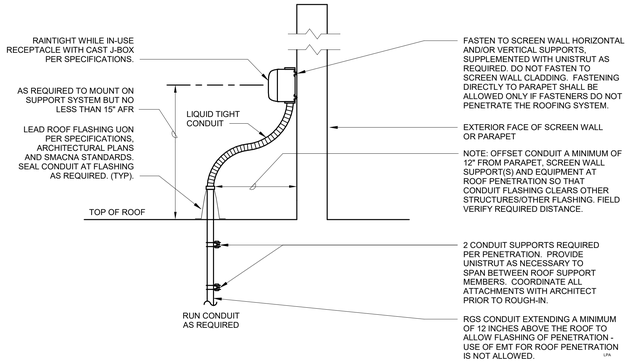

PARARET / SCREEN WALL SWITCH / RECEPTACLE MOUNTING DETAIL | NTS | 03

1. TRANSFORMERS SHALL BE DRY TYPE, INTEGRAL, SELF-COOLED, ENCLOSED DISTRIBUTION, TWO-WINDING TYPE PER UL 506. TRANSFORMERS SHALL BE PROVIDED WITH WINDINGS AS SPECIFIED IN THE TRANSFORMER SCHEDULE. EACH TRANSFORMER MUST UNDERGO RESISTANCE, IMPEDANCE AND RATIO TESTING, THE RESULTS OF WHICH SHALL BE PROVIDED AS PART OF THE TRANSFORMER SUBMITTAL PACKAGE.
2. TRANSFORMERS SHALL BE EQUIPPED WITH TWO (2) 2 1/2% FCAN AND TWO (2) 2 1/2% FCBN TAPS. TAP LEADS SHALL BE TERMINATED ON AN INTERNAL BLOCK WITH LUGS FOR CONNECTION OF INCOMING CONDUCTORS. THE TERMINAL COMPARTMENT SHALL BE LOCATED BELOW THE LEVEL OF THE TRANSFORMER WINDINGS. PROVIDE ACCESS TO TERMINALS FROM THE FRONT FOR WALL AND FLOOR MOUNTED TRANSFORMERS, AND FROM THE FRONT AND BOTTOM FOR SUSPENDED TRANSFORMERS.
3. VENTILATION OPENINGS SHALL BE LOCATED TO PERMIT PLACING THE TRANSFORMER IN A CORNER WITHIN 6" OF THE TWO ADJACENT WALLS. ENCLOSURE SHALL BE CONSTRUCTED OF HEAVY GAUGE STEEL, COATED INSIDE AND OUT WITH ZINC CHROMATE OR IRON OXIDE RUST INHIBITING PRIMER. ENCLOSURE SHALL THEN BE FINISHED IN GRAY ENAMEL. EACH TRANSFORMER SHALL BE FURNISHED WITH A MANUFACTURER'S NAMEPLATE LOCATED ON THE FRONT OF THE UNIT. THE NAMEPLATE SHALL BE ANODIZED ALUMINUM STENCILED WITH VOLTAGE, KVA RATING, K-RATING, PHASE, TAP ADJUSTMENTS AND WIRING DIAGRAMS.
4. STANDARD TRANSFORMERS SHALL HAVE CLASS 220 INSULATION, HAVING A 150 DEGREE CELSIUS TEMPERATURE RISE ABOVE 30 DEGREE CELSIUS AVERAGE AND 40 DEGREE CELSIUS MAXIMUM, WHEN OPERATING AT FULL LOAD - WITHOUT A LOSS OF LIFE. STANDARD TRANSFORMERS SHALL COMPLY WITH NEMA ENERGY EFFICIENCY STANDARD "TP-1".
5. K RATED TRANSFORMERS SHALL HAVE CLASS 220 INSULATION, HAVING A 115 DEGREE CELSIUS TEMPERATURE RISE ABOVE 30 DEGREE CELSIUS AVERAGE AND 40 DEGREE CELSIUS MAXIMUM, WHEN OPERATING AT FULL LOAD - WITHOUT A LOSS OF LIFE. K RATED TRANSFORMERS SHALL COMPLY WITH NEMA ENERGY EFFICIENCY STANDARD "TP-1".
6. USE FLEXIBLE CONDUIT FOR PRIMARY AND SECONDARY CONNECTIONS WITH A SEPARATE EQUIPMENT GROUND CONDUCTOR.
7. THE "MIN. %Z" COLUMN INDICATES THE MINIMUM ALLOWED TRANSFORMER IMPEDANCE.
8. THE "A.I.C. VALUE" COLUMN INDICATES THE INTERRUPTING CURRENT AT THE SECONDARY TERMINALS BASED UPON AN INTERRUPTING CURRENT OF INFINITY AT THE PRIMARY TERMINALS.
9. THE "K VALUE" COLUMN INDICATES THE MINIMUM UL APPROVED K RATING. K RATED TRANSFORMERS SHALL BE PROVIDED WITH DOUBLE SIZE NEUTRAL TERMINALS, ADDITIONAL COIL CAPACITY, AN ELECTROSTATIC SHIELD, AND SHALL BE UL LISTED FOR NON-LINEAR LOADS.
10. THE "GEC SIZE" COLUMN INDICATES THE MINIMUM CONDUIT AND COPPER GROUNDING ELECTRODE CONDUCTOR SIZE. THE G.E.C. AND CONDUIT SIZE SHALL BE INCREASED PER NEC OR CEC WHERE ADOPTED, TABLE 250.66 BY THE CONTRACTOR BASED ON EQUIVALENT SIZE OF THE TRANSFORMER SECONDARY CONDUCTORS.
11. WHEN THE TRANSFORMER SCHEDULE INDICATES A "REDUCED SOUND LEVEL" TRANSFORMER, PROVIDE A TRANSFORMER THAT PRODUCES 3 DECIBELS LESS SOUND AS COMPARED TO NEMA STANDARD SOUND LEVELS. WHEN REDUCED SOUND LEVEL TRANSFORMER IS NOT INDICATED, PROVIDE A TRANSFORMER THAT MEETS NEMA STANDARD SOUND LEVELS, WHICH ARE:
    10-50 KVA - 45 DECIBELS
    51-150 KVA - 50 DECIBELS
    151-300 KVA - 55 DECIBELS
    301-300 KVA - 60 DECIBELS
12. THE "DIMENSIONS" COLUMN INDICATES "H" HEIGHT, "W" WIDTH, AND "D" DEPTH. ALL DIMENSIONS AND WEIGHTS ARE BASED UPON SQUARE D PRODUCTS. CONTRACTOR SHALL BE RESPONSIBLE FOR ALL COST IMPACTS OF LARGER DIMENSIONS FROM AN ALTERNATE MANUFACTURER.
13. TRANSFORMERS SHALL BE GROUNDED TO A CODE APPROVED GROUND SOURCE PER NEC, OR CEC WHERE ADOPTED, ARTICLE 250.30.
14. IF THE SINGLE LINE DIAGRAM INDICATES TWO (2) SECONDARY FEEDERS THE TRANSFORMER SHALL BE PROVIDED WITH A DOUBLE LUG KIT.
15. SHOP DRAWINGS SHALL BE SUBMITTED PER THE ELECTRICAL SUBMITTAL REQUIREMENTS SHOWING CONFORMANCE TO THESE SPECIFICATIONS.
16. TRANSFORMERS SHALL BE MANUFACTURED BY GE, CUTLER-HAMMER, SIEMENS, SQUARE D, OR OLSEN.

NAME	KVA	WINDING MATERIAL	INPUT			OUTPUT			MIN %Z	A.I.C. VALUE	K VAL.	GEC SIZE	REDUCED SOUND LEVEL	NEMA	DIMENSIONS			WGT.
			V	P	W	V	P	W							H	W	D	
T-1	112.5	COPPER	480	3	3	120/208	3	4	2.5	24,629	4.3	3/4"C, #3/0	N/A	1	46	31.31	24	1,098

REFER TO STRUCTURAL DETAIL 03/S6.92 FOR ANCHORAGE INFORMATION FOR FLOOR MOUNTED ELECTRICAL EQUIPMENT.

LPA

TRANSFORMER SYSTEM SPECIFICATIONS | N.T.S. | 01

IDENTIFICATION STAMP
DIV. OF THE STATE ARCHITECT
APP: 02-119490 INC:
REVIEWED FOR
SS ☑ FLS ☑ ACS ☑
DATE: 09/13/2022

LPA
ARCHITECTURE ENGINEERING INTERIORS
LANDSCAPE ARCHITECTURE PLANNING

916-287-2400 Office
916-287-2401 Fax
LPADesignStudios.com
431 I Street,
Suite 107
Sacramento, California 95814

REGISTERED PROFESSIONAL ENGINEER
STEPHEN BARR
E-17415
9/30/23
ELECTRICAL
STATE OF CALIFORNIA

This document and all other project documents, ideas, aesthetics and designs incorporated therein are instruments of service. All project documents are copyright protected, are the property of LPA, Inc. (LPA) and cannot be lawfully used in whole or in part for any project or purpose except as set forth in the contractual agreement between LPA and its Client. The unauthorized disclosure and/or use of the project documents (including the creation of derivative works), may give rise to liability for copyright infringement, unlawful disclosure, use or misappropriation of property rights held by LPA. The unauthorized use of the project documents will give rise to the recovery of monetary losses and damages including attorney fees and costs for which the unauthorized user will be held liable.
Project documents describe the design intent of the work and are not a representation of as-built or existing conditions. LPA is not responsible for any discrepancies between the project documents and the existing conditions.

© LPA, Inc.

DAVIS SENIOR HIGH SCHOOL
NEW AQUATICS CENTER
315 W 14TH ST., DAVIS, CA 95616

Developed for
DAVIS JOINT UNIFIED SCHOOL DISTRICT

Revision	Date

Submittal	Date
50% DESIGN DEVELOPMENT	06/15/2021
100% DD SUBMITTAL	07/26/2021
50% CD REVIEW	10/08/2021
100% CD DSA SUBMITTAL	10/22/2021
DSA SUBMITTAL	03/24/2022

Job Number	1904413
Date Published	03/24/2022
Checked By	LPA
Scale	N.T.S.

ELECTRICAL DETAILS

E7.03

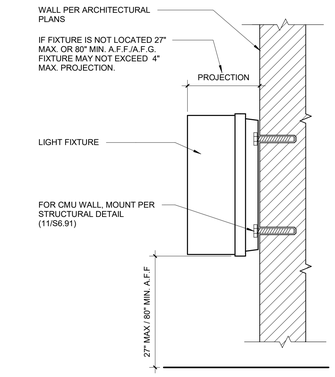

WALL MOUNTED LIGHT FIXTURE | N.T.S. | 04

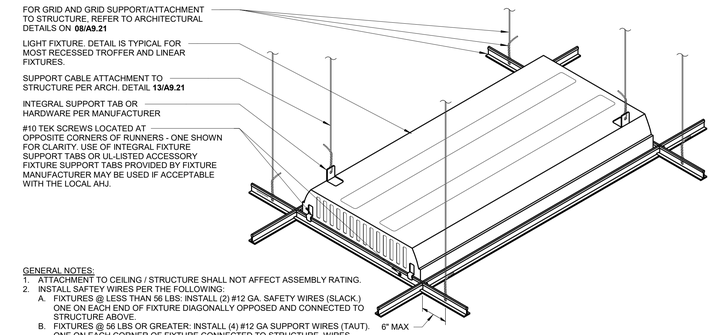

GENERAL NOTES:
1. ATTACHMENT TO CEILING / STRUCTURE SHALL NOT AFFECT ASSEMBLY RATING.
2. INSTALL SAFTEY WIRES PER THE FOLLOWING:
   A. FIXTURES @ LESS THAN 56 LBS: INSTALL (2) #12 GA. SAFETY WIRES (SLACK.) ONE ON EACH END OF FIXTURE DIAGONALLY OPPOSED AND CONNECTED TO STRUCTURE ABOVE.
   B. FIXTURES @ 56 LBS OR GREATER: INSTALL (4) #12 GA SUPPORT WIRES (TAUT). ONE ON EACH CORNER OF FIXTURE CONNECTED TO STRUCTURE. WIRES SHALL SUPPORT (4) TIMES THE WEIGHT OF THE FIXTURE.
   C. FIXTURES @ LESS THAN 56 LBS AND 4'X4' MIN IN SIZE: INSTALL (4) #12 GA. SAFETY WIRES (SLACK) AT EACH CORNER OF THE FIXTURE.

RECESSED FIXTURE - GRID CEILING | 1" = 1'-0" | 06

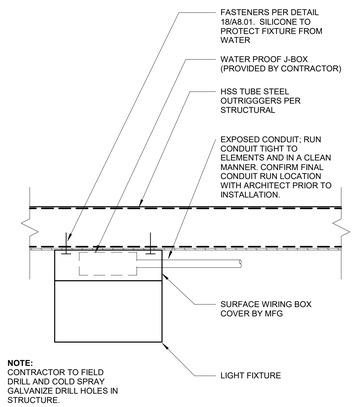

NOTE:
CONTRACTOR TO FIELD DRILL AND COLD SPRAY GALVANIZE DRILL HOLES IN STRUCTURE.

SURFACE MOUNTED LIGHT FIXTURE | N.T.S. | 02

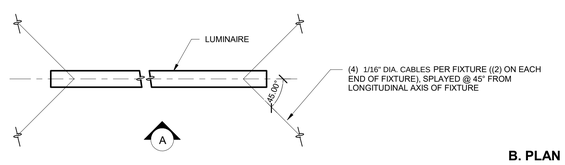

B. PLAN

NOTES:

1. SUSPENDED LIGHT FIXTURES MUST BE FREE TO SWING A MINIMUM OF 45° FROM THE VERTICAL IN ALL DIRECTIONS BELOW THE CEILING WITHOUT CONTACTING OBSTRUCTIONS, IN ORDER TO COMPLY WITH THE LATERAL-FORCE REQUIREMENT OF 2019 C.B.C., SECTION 1613A & CHAPTER 13, ASCE 7-16.

2. BRACE ALL SUSPENDED FIXTURES. PROVIDE ALL COMPONENTS NECESSARY FOR CABLE SEISMIC BRACING SYSTEM TO LIMIT MOVEMENT OF CABLE HUNG FIXTURES.

3. ALL COMPONENTS SHALL BE APPROVED FOR A COMPLETE CODE-COMPLIANT SEISMIC BRACING SYSTEM TO LIMIT MOVEMENT OF CABLE HUNG FIXTURES. CABLE BRACING SYSTEM SHALL NOT BE DRAWN TAUT TO AVOID DAMAGING THE BRACING SYSTEM DURING WALL MOVEMENT CAUSED BY EARTHQUAKES. ADJUST TENSION PER BRACING SYSTEM MFGR RECOMMENDATIONS.

4. SUPPORT TYPICAL FOR FEED & NON FEED POINT (WITHOUT J-BOX AND FLEX).

5. SHOULD A CONFLICT OCCUR BETWEEN FIXTURE SUPPORT DETAIL AND HVAC DUCT ROUTING, EC SHALL INCLUDE ALL COSTS IN BASE BID TO PROVIDE A UNISTRUT "TRAPEZE" (SEE ARCHITECTURAL DETAIL 01/A9.22) WITH 3/8" DIA THREADED ROD HANGERS AROUND THE HVAC DUCT OR OTHER OBSTRUCTION. TRAPEZE SHALL BE SUBMITTED TO PROJECT STRUCTURAL ENGINEER FOR REVIEW PRIOR TO CONSTRUCTION OR OF ORDERING TRAPEZE MATERIAL.

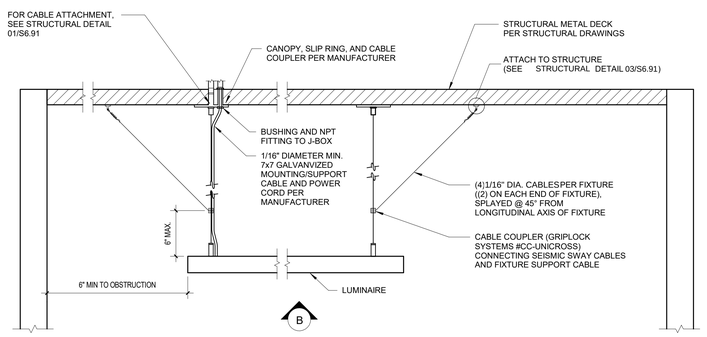

A. SECTION

PENDANT FIXTURE - SPLAY BRACING (LINEAR) | N.T.S. | 05

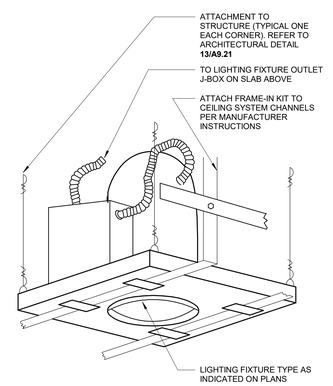

RECESSED DOWNLIGHT | N.T.S. | 01

IDENTIFICATION STAMP
DIV. OF THE STATE ARCHITECT
APP: 02-119490 INC:
REVIEWED FOR
SS ☑ FLS ☑ ACS ☑
DATE: 09/13/2022

LPA
ARCHITECTURE ENGINEERING INTERIORS
LANDSCAPE ARCHITECTURE PLANNING

916-287-2400 Office
916-287-2401 Fax
LPADesignStudios.com
431 I Street,
Suite 107
Sacramento, California 95814

REGISTERED PROFESSIONAL ENGINEER
STEPHEN BARR
E-17415
9/30/23
ELECTRICAL
STATE OF CALIFORNIA

This document and all other project documents, ideas, aesthetics and designs incorporated therein are instruments of service. All project documents are copyright protected, are the property of LPA, Inc. (LPA) and cannot be lawfully used in whole or in part for any project or purpose except as set forth in the contractual agreement between LPA and its Client. The unauthorized disclosure and/or use of the project documents (including the creation of derivative works), may give rise to liability for copyright infringement, unlawful disclosure, use or misappropriation of property rights held by LPA. The unauthorized use of the project documents will give rise to the recovery of monetary losses and damages including attorney fees and costs for which the unauthorized user will be held liable.
Project documents describe the design intent of the work and are not a representation of as-built or existing conditions. LPA is not responsible for any discrepancies between the project documents and the existing conditions.

© LPA, Inc.

DAVIS SENIOR HIGH SCHOOL
NEW AQUATICS CENTER
315 W 14TH ST., DAVIS, CA 95616

Developed for
DAVIS JOINT UNIFIED SCHOOL DISTRICT

Revision	Date

Submittal	Date
50% DESIGN DEVELOPMENT	06/15/2021
100% DD SUBMITTAL	07/26/2021
50% CD REVIEW	10/08/2021
100% CD DSA SUBMITTAL	10/22/2021
DSA SUBMITTAL	03/24/2022

Job Number	1904413
Date Published	03/24/2022
Checked By	LPA
Scale	As indicated

LIGHTING DETAILS

E7.04

STATE OF CALIFORNIA
Indoor Lighting
NRCC-LTI-E — CALIFORNIA ENERGY COMMISSION

CERTIFICATE OF COMPLIANCE		NRCC-LTI-E
Project Name: Davis Senior High School - New Aquatics Center Pool Mechanical Building	Report Page:	(Page 1 of 10)
Project Address: 315 W 14th ST	Date Prepared:	3/14/2022

This document is used to demonstrate compliance with requirements in §110.9, §110.12(c), §130.0, §130.1, §140.6 and §141.0(b)2 for indoor lighting scopes using the prescriptive path.

A. GENERAL INFORMATION

01 Project Location (city)	Davis	04 Total Conditioned Floor Area (ft^2)	206
02 Climate Zone	12	05 Total Unconditioned Floor Area (ft^2)	1,680
03 Occupancy Types Within Project (select all that apply):		06 # of Stories (Habitable Above Grade)	1

☒ Office ☐ Retail ☐ Warehouse ☐ Hotel/Motel ☐ School ☐ Support Areas
☐ Parking Garage ☐ High-Rise Residential ☐ Relocatable ☐ Healthcare ☒ Other (Write in) See Table 1

B. PROJECT SCOPE

This table includes any lighting systems that are within the scope of the permit application and are demonstrating compliance using the prescriptive path outlined in §140.6 or §141.0(b)1 for alterations.

Scope of Work	Conditioned Spaces		Unconditioned Spaces	
01	02	03	04	05
My Project Consists of (Check all that apply):	Calculation Method	Area (ft^2)	Calculation Method	Area (ft^2)
☒ New Lighting System	Area Category Method	206	Area Category Method	1680
☐ New Lighting System - Parking Garage				
Total Area of Work (ft^2)	206		1680	

STATE OF CALIFORNIA
Indoor Lighting
NRCC-LTI-E — CALIFORNIA ENERGY COMMISSION

CERTIFICATE OF COMPLIANCE		NRCC-LTI-E
Project Name: Davis Senior High School - New Aquatics Center Pool Mechanical Building	Report Page:	(Page 2 of 10)
Project Address: 315 W 14th ST	Date Prepared:	3/14/2022

C. COMPLIANCE RESULTS

If any cell on this table says "DOES NOT COMPLY" or "COMPLIES with Exceptional Conditions" refer to Table D. for guidance.

Lighting in conditioned and unconditioned spaces must not be combined for compliance per §140.6(b)1	Allowed Lighting Power per §140.6(b)3 (Watts)						Adjusted Lighting Power per §140.6(a) (Watts)				Compliance Results
	01	02	03	04		05	06	07		08	09
	Complete Building §140.6(c)1	Area Category §140.6(c)2	Area Category Additional §140.6(c)2b (+)	Tailored §140.6(c)3 (+)	=	Total Allowed (Watts)	Total Designed (Watts)	Adjustments: PAF Lighting Control Credits §140.6(a)2 (-)	=	Total Adjusted (Watts) *Includes Adjustments	05 must be >= 08 §140.6
	(See Table I)	(See Table J)	(See Table J)	(See Table K)			(See Table F)	(See Table P)			
Conditioned		112.7	21		=	133.7	≥ 106	0	=	106	COMPLIES
Unconditioned		672	237.2		=	909.2	≥ 893	0	=	893	COMPLIES
Controls Compliance (See Table H for Details)											COMPLIES
Rated Power Reduction Compliance (See Table Q for Details)											

D. EXCEPTIONAL CONDITIONS

This table is auto-filled with uneditable comments because of selections made or data entered in tables throughout the form.

E. ADDITIONAL REMARKS

This table includes remarks made by the permit applicant to the Authority Having Jurisdiction.

F. INDOOR LIGHTING FIXTURE SCHEDULE

This table includes all permanent designed lighting and all portable lighting in offices.

Designed Wattage: Conditioned Spaces

01	02	03	04	05	06	07	08	09	10	
Name or Item Tag	Complete Luminaire Description	Modular (Track) Fixture	Small Aperture & Color Changer	Watts per luminaire[1]	How is Wattage determined	Total Number of Luminaires	Excluded per §140.6(a)3	Design Watts	Field Inspector	
									Pass	Fail
P1	P1 - (1) 36W 4' Pendant LED Strip Light	No	No	36	Mfr. Spec	2	No	72	☐	☐

STATE OF CALIFORNIA
Indoor Lighting
NRCC-LTI-E — CALIFORNIA ENERGY COMMISSION

CERTIFICATE OF COMPLIANCE		NRCC-LTI-E
Project Name: Davis Senior High School - New Aquatics Center Pool Mechanical Building	Report Page:	(Page 3 of 10)
Project Address: 315 W 14th ST	Date Prepared:	3/14/2022

F. INDOOR LIGHTING FIXTURE SCHEDULE

R1	R1 - (1) 34W 2'x4' Recessed Direct/Indirect LED	No	No	34	Mfr. Spec	1	No	34	☐	☐
Total Designed Watts: CONDITIONED SPACES								106		

Designed Wattage: Unconditioned Spaces

01	02	03	04	05	06	07	08	09	10	
Name or Item Tag	Complete Luminaire Description	Modular (Track) Fixture	Small Aperture & Color Changer	Watts per luminaire[1]	How is Wattage determined	Total Number of Luminaires	Excluded per §140.6(a)3	Design Watts	Field Inspector	
									Pass	Fail
P1	P1 - (1) 36W 4' Pendant LED Strip Light	No	No	36	Mfr. Spec	22	No	792	☐	☐
P2	P2 - (1) 40W 4' Pendant LED Strip Light	No	No	40	Mfr. Spec	2	No	80	☐	☐
W1	W1 - (1) 21W Wall Mounted LED	No	No	21	Mfr. Spec	1	No	21	☐	☐
Total Designed Watts: UNCONDITIONED SPACES								893		

[1]FOOTNOTE: Design Watts for small aperture and color changing luminaires which qualify per §140.6(a)4B is adjusted to be 75% of their rated wattage. Table F automatically makes this adjustment, the permit applicant should enter full rated wattage in column 05.

[2]Authority Having Jurisdiction may ask for Luminaire cut sheets to confirm wattage used for compliance per §130.0(c). Wattage used must be the maximum rated for the luminaire, not the lamp.

G. MODULAR LIGHTING SYSTEMS

This section does not apply to this project.

H. INDOOR LIGHTING CONTROLS (Not including PAFs)

*This table includes lighting controls for conditioned and unconditioned spaces. When a control having a * is shown, the notes section of this table provides more detail on how compliance is achieved. The lighting controls section of the Compliance Summary Table on the first page will show "DOES NOT COMPLY" if the notes are left blank.*

Building Level Controls

01	02	03	
		Field Inspector	
		Pass	Fail
Mandatory Demand Response §110.12(c)	Shut-off controls §130.1(c)		

STATE OF CALIFORNIA
Indoor Lighting
NRCC-LTI-E — CALIFORNIA ENERGY COMMISSION

CERTIFICATE OF COMPLIANCE		NRCC-LTI-E
Project Name: Davis Senior High School - New Aquatics Center Pool Mechanical Building	Report Page:	(Page 4 of 10)
Project Address: 315 W 14th ST	Date Prepared:	3/14/2022

H. INDOOR LIGHTING CONTROLS (Not including PAFs)

Not Required <= 10,000 SF — See Area/Space Level Controls ☐ ☐

Area Level Controls

04	05	06	07	08	09	10	11	12	
Area Description	Complete Building or Area Category Primary Function Area	Area Controls §130.1(a)	Multi-Level Controls §130.1(b)	Shut-Off Controls §130.1(c)	Primary/Skylight Daylighting §130.1(d)	Secondary Daylighting §140.6(d)	Interlocked Systems §140.6(a)1	Field Inspector	
								Pass	Fail
Pool Mechanical 1001	Electrical Mechanical Telephone Room	Manual ON/OFF	Dimmer	Occupancy Sensor	N/A	N/A	No	☐	☐
Chemical 1002	All Other Space Types	Manual ON/OFF	Dimmer	Occupancy Sensor	N/A	N/A	No	☐	☐
Chemical 1003	All Other Space Types	Manual ON/OFF	Dimmer	Occupancy Sensor	N/A	N/A	No	☐	☐
Electrical 1004	Electrical Mechanical Telephone Room	Manual ON/OFF	Exempt*	Exempt*	N/A	N/A	No	☐	☐
Storage 1005	All Other Space Types	Manual ON/OFF	Dimmer	Occupancy Sensor	N/A	N/A	No	☐	☐
Office 1006	Office 250 square feet or less	Manual ON/OFF	Dimmer	Occupancy Sensor	N/A	N/A	No	☐	☐
Fire Riser 1019	All Other Space Types	Manual ON/OFF	Dimmer	Occupancy Sensor	N/A	N/A	No	☐	☐

*NOTES: Controls with a * require a note in the space below explaining how compliance is achieved.
EX: Conference 1: Primary/Skylight Daylighting: Exempt because less than 120 watts of general lighting; EXCEPTION 1 to §130.1(d)2.

		13
Electrical 1004	Exception 4 to Section 130.1(c)1	Plan Sheet Showing Daylit Zones:

STATE OF CALIFORNIA
Indoor Lighting
NRCC-LTI-E — CALIFORNIA ENERGY COMMISSION

CERTIFICATE OF COMPLIANCE		NRCC-LTI-E
Project Name: Davis Senior High School - New Aquatics Center Pool Mechanical Building	Report Page:	(Page 5 of 10)
Project Address: 315 W 14th ST	Date Prepared:	3/14/2022

J. LIGHTING POWER ALLOWANCE: COMPLETE BUILDING OR AREA CATEGORY METHODS

Each area complying using the Complete Building or Area Category Methods per §140.6(b) are included in this table. Column 06 indicates if additional lighting power allowances per §140.6(c) or adjustments per §140.6(a) are being used.

Conditioned Spaces

01	02	03	04	05	06	
Area Description	Complete Building or Area Category Primary Function Area	Allowed Density (W/ft^2)	Area (ft^2)	Allowed Wattage (Watts)	Additional Allowance / Adjustment	
					Area Category	PAF
FC-1	Electrical Mechanical Telephone Room	0.4	105	42	Yes	No
FC-2	Office 250 square feet or less	0.7	101	70.7	No	No
			TOTALS:	206	112.7	See Tables I, or P for detail

Unconditioned Spaces

01	02	03	04	05	06	
Area Description	Complete Building or Area Category Primary Function Area	Allowed Density (W/ft^2)	Area (ft^2)	Allowed Wattage (Watts)	Additional Allowance / Adjustment	
					Area Category	PAF
Mechanical	Electrical Mechanical Telephone Room	0.4	1,186	474.4	Yes	No
Support:	All Other Space Types	0.4	494	197.6	No	No
			TOTALS:	1,680	672	See Tables I, or P for detail

STATE OF CALIFORNIA
Indoor Lighting
NRCC-LTI-E — CALIFORNIA ENERGY COMMISSION

CERTIFICATE OF COMPLIANCE		NRCC-LTI-E
Project Name: Davis Senior High School - New Aquatics Center Pool Mechanical Building	Report Page:	(Page 6 of 10)
Project Address: 315 W 14th ST	Date Prepared:	3/14/2022

J. ADDITIONAL ALLOWANCE: AREA CATEGORY METHOD QUALIFYING LIGHTING SYSTEM

All areas indicated in Table I as using an additional allowance using the Area Category Method have been included in this table to calculate the additional allowance per Table 140.6-C.

Conditioned Spaces:

01	02	03	04	05	06	07	08	09	10
Area Description	Primary Function Area	Applicable Qualifying Lighting System from Table 140.6-C	Allowed Density (W/ft^2 or W/lf or W/unit)	Ltg Area, Length or ATM/Mirror (ft^2, lf or #)	Extra Allowance (Watts)	Luminaire Name or Item Tag	Watts per Luminaire	Number of Luminaires	Total Design Watts
FC-1	Electrical Mechanical Telephone Room	DetailedTaskLighting	0.20	105	21.00	P1	36	2	72
Total Design Watts	Calculated Allowance (Watts)	Total Additional Allowance for this area:							
72	21.00	21.00							
11									
Total Additional Allowance (Watts) CONDITIONED SPACES		21.00							

STATE OF CALIFORNIA
Indoor Lighting
NRCC-LTI-E — CALIFORNIA ENERGY COMMISSION

CERTIFICATE OF COMPLIANCE		NRCC-LTI-E
Project Name: Davis Senior High School - New Aquatics Center Pool Mechanical Building	Report Page:	(Page 7 of 10)
Project Address: 315 W 14th ST	Date Prepared:	3/14/2022

J. ADDITIONAL ALLOWANCE: AREA CATEGORY METHOD QUALIFYING LIGHTING SYSTEM

Unconditioned Spaces

01	02	03	04	05	06	07	08	09	10
Area Description	Primary Function Area	Applicable Qualifying Lighting System from Table 140.6-C	Allowed Density (W/ft^2 or W/lf or W/unit)	Ltg Area, Length or ATMs (ft^2, lf or #)	Extra Allowance (Watts)	Luminaire Name or Item Tag	Watts per Luminaire	Number of Luminaires	Total Design Watts
Mechanical	ElectricalMechanicalTelephoneRoom	DecorativeLighting			0	W1	21	1	21
		DetailedTaskLighting	0.20	1186	237.20	P1	36	17	612
Total Design Watts	Calculated Allowance (Watts):	Total Additional Allowance for this area:							
633	237.20	237.20							
11									
Total Additional Allowance (Watts) UNCONDITIONED SPACES		237.20							

K. TAILORED METHOD GENERAL LIGHTING POWER ALLOWANCE

This section does not apply to this project.

L. ADDITIONAL LIGHTING ALLOWANCE: TAILORED WALL DISPLAY

This section does not apply to this project.

M. ADDITIONAL LIGHTING ALLOWANCE: TAILORED FLOOR AND TASK LIGHTING

This section does not apply to this project.

N. ADDITIONAL LIGHTING ALLOWANCE: TAILORED ORNAMENTAL/SPECIAL EFFECTS

This section does not apply to this project.

STATE OF CALIFORNIA
Indoor Lighting
NRCC-LTI-E — CALIFORNIA ENERGY COMMISSION

CERTIFICATE OF COMPLIANCE		NRCC-LTI-E
Project Name: Davis Senior High School - New Aquatics Center Pool Mechanical Building	Report Page:	(Page 8 of 10)
Project Address: 315 W 14th ST	Date Prepared:	3/14/2022

O. ADDITIONAL LIGHTING ALLOWANCE: TAILORED VERY VALUABLE MERCHANDISE

This section does not apply to this project.

P.POWER ADJUSTMENT: LIGHTING CONTROL CREDIT (POWER ADJUSTMENT FACTOR (PAF))

This section does not apply to this project.

Q. RATED POWER REDUCTION COMPLIANCE FOR ALTERATIONS

This section does not apply to this project.

R. 80% LIGHTING POWER FOR ALLALTERATIONS - CONTROLS EXCEPTIONS

This section does not apply to this project.

S. DAYLIGHT DESIGN POWER ADJUSTMENT FACTOR (PAF)

This section does not apply to this project.

T. DECLARATION OF REQUIRED CERTIFICATES OF INSTALLATION

Selections have been made based on information provided in this document. If any selection have been changed by permit applicant, an explanation should be included in Table E. Additional Remarks. These documents must be provided to the building inspector during construction and can be found online at https://www.energy.ca.gov/title24/2019standards/2019_compliance_documents/Nonresidential_Documents/NRCI/

Yes	No	Form/Title	Field Inspector	
			Pass	Fail
●	○	NRCI-LTI-01-E - Must be submitted for all buildings	☐	☐
○	●	NRCI-LTI-02-E- Must be submitted for a lighting control system, or for an Energy Management Control System (EMCS), to be recognized for compliance.	☐	☐
○	●	NRCI-LTI-04-E - Must be submitted for two interlocked systems serving an auditorium, a convention center, a conference room, a multipurpose room or a theater to be recognized for compliance.	☐	☐
○	●	NRCI-LTI-05-E- Must be submitted for a Power Adjustment Factor (PAF) to be recognized for compliance.	☐	☐
○	●	NRCI-LTI-06-E- Must be submitted for additional wattage installed in a video conferencing studio to be recognized for compliance.	☐	☐

STATE OF CALIFORNIA
Indoor Lighting
NRCC-LTI-E — CALIFORNIA ENERGY COMMISSION

CERTIFICATE OF COMPLIANCE		NRCC-LTI-E
Project Name: Davis Senior High School - New Aquatics Center Pool Mechanical Building	Report Page:	(Page 9 of 10)
Project Address: 315 W 14th ST	Date Prepared:	3/14/2022

U. DECLARATION OF REQUIRED CERTIFICATES OF ACCEPTANCE

Selections have been made based on information provided in this document. If any selection have been changed by the permit applicant, an explanation should be included in Table E. Additional Remarks. These documents must be provided to the building inspector during construction and any with "-A" in the form name must be completed through an Acceptance Test Technician Certification Provider (ATTCP). For more information visit: https://www.energy.ca.gov/title24/attcp/providers.html

Yes	No	Form/Title	Field Inspector	
			Pass	Fail
●	○	NRCA-LTI-02-A - Must be submitted for occupancy sensors and automatic time switch controls.	☐	☐
○	●	NRCA-LTI-03-A - Must be submitted for automatic daylight controls.	☐	☐
○	●	NRCA-LTI-04-A - Must be submitted for demand responsive lighting controls.	☐	☐
○	●	NRCA-LTI-05-A. - Must be submitted for institutional tuning power adjustment factor (PAF)	☐	☐

STATE OF CALIFORNIA
Indoor Lighting
NRCC-LTI-E — CALIFORNIA ENERGY COMMISSION

CERTIFICATE OF COMPLIANCE		NRCC-LTI-E
Project Name: Davis Senior High School - New Aquatics Center Pool Mechanical Building	Report Page:	(Page 10 of 10)
Project Address: 315 W 14th ST	Date Prepared:	3/14/2022

DOCUMENTATION AUTHOR'S DECLARATION STATEMENT

I certify that this Certificate of Compliance documentation is accurate and complete.

Documentation Author Name: Stephen Bakin	Documentation Author Signature:
Company: LPA Design Studios, Inc.	Signature Date: 2022-03-14
Address: 5301 California Ave Suite #100	CEA/ HERS Certification Identification (If applicable):
City/State/Zip: Irvine CA 92617	Phone: (949) 261-1001

RESPONSIBLE PERSON'S DECLARATION STATEMENT

I certify the following under penalty of perjury, under the laws of the State of California:
1. This information provided on this Certificate of Compliance is true and correct.
2. I am eligible under Division 3 of the Business and Professions Code to accept responsibility for the building design or system design identified on this Certificate of Compliance (responsible designer)
3. The energy features and performance specifications, materials, components, and manufactured devices for the building design or system design identified on this Certificate of Compliance conform to the requirements of Title 24, Part 1 and Part 6 of the California Code of Regulations.
4. The building design features or system design features identified on this Certificate of Compliance are consistent with the information provided on other applicable compliance documents, worksheets, calculations, plans and specifications submitted to the enforcement agency for approval with this building permit application.
5. I will ensure that a completed signed copy of this Certificate of Compliance shall be made available with the building permit(s) issued for the building, and made available to the enforcement agency for all applicable inspections. I understand that a completed signed copy of this Certificate of Compliance is required to be included with the documentation the builder provides to the building owner at occupancy.

Responsible Designer Name: Stephen Bakin	Responsible Designer Signature:
Company: LPA Design Studios, Inc.	Date Signed: 2022-03-14
Address: 5301 California Ave Suite #100	License: E-17415
City/State/Zip: Irvine CA 92617	Phone: (949) 261-1001

STATE OF CALIFORNIA
Outdoor Lighting
NRCC-LTO-E — CALIFORNIA ENERGY COMMISSION

CERTIFICATE OF COMPLIANCE		NRCC-LTO-E
Project Name: Davis Senior High School - New Aquatics Center Pool Mechanical Building	Report Page:	(Page 1 of 8)
Project Address: 315 W 14th ST	Date Prepared:	3/14/2022

A. GENERAL INFORMATION

01 Project Location (city)	Davis	04 Total Illuminated Hardscape Area (ft^2)	664
02 Climate Zone	12		
03 Outdoor Lighting Zone per Title 24 Part 1 §10-114 or as designated by Authority Having Jurisdiction (AHJ):			

☐ LZ-0: Very Low - Undeveloped Parkland ☐ LZ-2: Moderate - Rural Areas ☐ LZ-4: High - Must be reviewed by CA Energy Commission for Approval
☐ LZ-1: Low - Developed Parkland ☒ LZ-3: Moderately High - Urban Areas

B. PROJECT SCOPE

This table includes outdoor lighting systems that are within the scope of the permit application and are demonstrating compliance using the prescriptive path outlined in §140.7 or §141.0(b)2c for alterations.

My Project Consists of:

	01	02
☒	New Lighting System	Must Comply with Allowances from §140.7
☐	Altered Lighting System	Is your alteration increasing the connected lighting load (Watts)? ○ Yes ○ No

03	04	05
% of Existing Luminaires Being Altered[1]	Sum Total of Luminaires Being Added or Altered	Calculation Method
☐ < 10% ☐ >= 10% and < 50% ☐ >= 50%		

Please proceed to Table F. Outdoor Lighting Fixture Schedule to define the project's luminaires.

[1] FOOTNOTES: % of Existing Luminaires Being Altered = (Sum Total of Luminaires Being Added or Altered / Existing Luminaires within the Scope of the Permit Application) x 100.

STATE OF CALIFORNIA
Outdoor Lighting
NRCC-LTO-E — CALIFORNIA ENERGY COMMISSION

CERTIFICATE OF COMPLIANCE		NRCC-LTO-E
Project Name: Davis Senior High School - New Aquatics Center Pool Mechanical Building	Report Page:	(Page 2 of 8)
Project Address: 315 W 14th ST	Date Prepared:	3/14/2022

C. COMPLIANCE RESULTS

Results in this table are automatically calculated from data input and calculations in Tables F through I. Note: If any cell on this table says "COMPLIES with Exceptional Conditions" refer to Table D. Exceptional Conditions for guidance or see applicable Table referenced below.

Calculations of Total Allowed Lighting Power (Watts) §140.7 or §141.0(b)2c												Compliance Results		
01		02		03		04		05		06		07		08	09
General Hardscape Allowance §140.7(d)1 (See Table I)	+	Per Application §140.7(d)2 (See Table I)	+	Sales Frontage §140.7(d)3 (See Table K)	+	Ornamental §140.7(d)4 (See Table L)	+	Per Specific Area §140.7(d)5 (See Table M)	OR	Existing Power Allowance §141.0(b)2a (See Table N)	=	Total Allowed (Watts)	≥	Total Actual (Watts)	07 must be >= 08
395.1	+	—	+	—	+	—	+	45.33	OR	—	+	440.43	≥	90	COMPLIES
Cutoff Compliance (See Table G for Details)															N/A
Controls Compliance (See Table H for Details)															COMPLIES with Exceptional Conditions

D. EXCEPTIONAL CONDITIONS

This table is auto-filled with uneditable comments because of selections made or data entered in tables throughout the form.

E. ADDITIONAL REMARKS

This table includes remarks made by the permit applicant to the Authority Having Jurisdiction.

IDENTIFICATION STAMP
DIV. OF THE STATE ARCHITECT
APP: 02-119490 INC:
REVIEWED FOR
SS ☑ FLS ☑ ACS ☑
DATE: 09/13/2022

LPA
ARCHITECTURE ENGINEERING INTERIORS
LANDSCAPE ARCHITECTURE PLANNING

916-287-2400 Office
916-287-2401 Fax
LPADesignStudios.com
431 I Street,
Suite 107
Sacramento, California 95814

REGISTERED PROFESSIONAL ENGINEER STEPHEN BAKIN E-17415 9/30/23 ELECTRICAL STATE OF CALIFORNIA

This document and all other project documents, ideas, aesthetics and designs incorporated therein are instruments of service. All project documents are copyright protected, are the property of LPA, Inc. (LPA) and cannot be lawfully used in whole or in part for any project or purpose except as set forth in the contractual agreement between LPA and its Client. The unauthorized disclosure and/or use of the project documents (including the creation of derivative works), may give rise to liability for copyright infringement, unlawful disclosure, use or misappropriation of property rights held by LPA. The unauthorized use of the project documents will give rise to the recovery of monetary losses and damages including attorney fees and costs for which the unauthorized user will be held liable.
Project documents describe the design intent of the work and are not a representation of as-built or existing conditions. LPA is not responsible for any discrepancies between the project documents and the existing conditions.

© LPA, Inc.

DAVIS SENIOR HIGH SCHOOL
NEW AQUATICS CENTER
315 W 14TH ST., DAVIS, CA 95616

Developed for
DAVIS JOINT UNIFIED SCHOOL DISTRICT

Revision	Date

Submittal	Date
50% DESIGN DEVELOPMENT	06/15/2021
100% DD SUBMITTAL	07/26/2021
50% CD REVIEW	10/08/2021
100% CD DSA SUBMITTAL	10/22/2021
DSA SUBMITTAL	03/24/2022

Job Number	1904413
Date Published	03/24/2022
Checked By	LPA
Scale	

ENERGY COMPLIANCE FORMS

E8.01

STATE OF CALIFORNIA
Outdoor Lighting
NRCC-LTO-E CALIFORNIA ENERGY COMMISSION

CERTIFICATE OF COMPLIANCE			**NRCC-LTO-E**
Project Name:	Davis Senior High School - New Aquatics Center Pool Mechanical Building	**Report Page:**	**(Page 1 of 9)**
Project Address:	315 W 14th ST.	**Date Prepared:**	3/14/2022

F. OUTDOOR LIGHTING FIXTURE SCHEDULE

For new or altered lighting systems demonstrating compliance with §140.7, all new luminaires being installed and any existing luminaires remaining or being moved within the spaces covered by the permit application are included in the Table below. For altered lighting systems using the Existing Power method per §141.0(b)2I, only new luminaires being installed and replacement luminaires being installed as part of the project scope are included (ie, existing luminaires remaining or existing luminaires being moved are not included).

Designed Wattage:

01	02		03	04	05	06	07	08	09	10	
Name or Item Tag	Complete Luminaire Description		Watts per luminaire[1,2]	How is Wattage determined	Total number luminaires[1]	Luminaire Status[3]	Excluded per §140.7(a)	Design Watts	Cutoff Req. > 6,200 initial lumen output §140.7(b)[4]	Field Inspector	
										Pass	Fail
S2	S2 - [1] 6W Surface LED Square Downlight	☐ Linear	6	Mfr. Spec	8	New	☐	48	NA: < 6200 lumens.	☐	☐
W1	W1 - (1) 21W Wall Mounted LED	☐ Linear	21	Mfr. Spec	2	New	☐	42	NA: < 6200 lumens.	☐	☐
							Total Design Watts:	90			

* NOTES: Selections with a * require a note in the space below explaining how compliance is achieved.
EX: Luminaire is lighting a statue; EXCEPTION 2 to §130.0(L)

[1] FOOTNOTES: Authority Having Jurisdiction may ask for Luminaire cut sheets to confirm wattage used for compliance per §130.0(c)

[2] For linear luminaires, wattage should be indicated as W/lf instead of Watts/luminaire. Total linear feet should be indicated in column 05 instead of number of luminaires.

[3] Select "New" for new luminaires in a new outdoor lighting project, or for added luminaires in an alteration. Select "Altered" for replacement luminaires in an alteration. Select "Existing to Remain" for existing luminaires within the project scope that are not being altered and are remaining. Select "Existing Reinstalled" for existing luminaires which are being removed and reinstalled as part of the project scope.

[4] Compliance with mandatory cutoff requirements is required for luminaires with initial lumen output >= 6,200 unless exempted by §140.6(b)

G. CUTOFF REQUIREMENTS (BUG)

This section does not apply to this project.

Registration Number:	Registration Date/Time:	Registration Provider: Energysoft
CA Building Energy Efficiency Standards - 2019 Nonresidential Compliance	Report Version: 2019.0.001 Schema Version: rev 20190401	Report Generated: 2022-03-14 15:02:54

STATE OF CALIFORNIA
Outdoor Lighting
NRCC-LTO-E CALIFORNIA ENERGY COMMISSION

CERTIFICATE OF COMPLIANCE			**NRCC-LTO-E**
Project Name:	Davis Senior High School - New Aquatics Center Pool Mechanical Building	**Report Page:**	**(Page 4 of 9)**
Project Address:	315 W 14th ST.	**Date Prepared:**	3/14/2022

H. OUTDOOR LIGHTING CONTROLS

This table demonstrates compliance with controls requirements for all new or altered luminaires installed as part of the permit application. For alteration projects, luminaires which are existing to remain (ie untouched) and luminaires which are removed and reinstalled (wiring only) do not need to be included in this table even if they are within the spaces covered by the permit application.
*When an option having a * is selected, the notes section of this table must be completed. The lighting controls section of the Compliance Summary Table on the first page will show "DOES NOT COMPLY" if the notes are left blank.*

Mandatory Controls

01	02	03	04	05	
Area Description	Shut-Off §130.2(c)1	Auto Schedule §130.2(c)2	Motion Sensor §130.2(c)3	Field Inspector	
				Pass	Fail
Non Sales Canopy (North Side Bldg.) - Fix. Type "S2"	Astronomical Timer	Yes	Exempt*	☐	☐
Non Sales Canopy (North Side Bldg.) - Fix. Type "S2"	Astronomical Timer	Yes	Exempt*	☐	☐
Pedestrian Hardscape - Fix. Type "W1"	Astronomical Timer	Yes	Exempt*	☐	☐

** NOTES: Controls with a * require a note in the space below explaining how compliance is achieved.*
EX: Not permitted by health & safety to be turned off; EXCEPTION 1 to §130.2(c)

Non Sales Canopy (North Side Bldg.) - Fix. Type "S2"	Exception 1 to Section 130.2(c)3
Non Sales Canopy (North Side Bldg.) - Fix. Type "S2"	Exception 1 to Section 130.2(c)3
Pedestrian Hardscape - Fix. Type "W1".	Exception 1 to Section 130.2(c)3

Registration Number:	Registration Date/Time:	Registration Provider: Energysoft
CA Building Energy Efficiency Standards - 2019 Nonresidential Compliance	Report Version: 2019.0.001 Schema Version: rev 20190401	Report Generated: 2022-03-14 15:02:54

STATE OF CALIFORNIA
Outdoor Lighting
NRCC-LTO-E CALIFORNIA ENERGY COMMISSION

CERTIFICATE OF COMPLIANCE			**NRCC-LTO-E**
Project Name:	Davis Senior High School - New Aquatics Center Pool Mechanical Building	**Report Page:**	**(Page 5 of 9)**
Project Address:	315 W 14th ST.	**Date Prepared:**	3/14/2022

I. LIGHTING POWER ALLOWANCE (per §140.7)

This table includes areas using allowance calculations per §140.7. General Hardscape Allowance is per Table 140.7-A while "Use it or lose it" Allowances are per Table 140.7-B . Indicate which allowances are being used to expand sections for user input. Luminaires that qualify for one of the "Use it or lose it" allowances shall not qualify for another "Use it or lose it" allowance.

01				
☒ General Hardscape Allowance Table I (below)	"Use it or lose it" Allowance (select all that apply) (select all that apply)			
	☐ Per Application Table J	☐ Sales Frontage Table K	☐ Ornamental Table L	☒ Per Specific Area Table M

Calculated General Hardscape Lighting Power Allowance per Table 140.7-A (LZ 0, 1 & 4) .

This section does not apply to this project.

Calculated General Hardscape Lighting Power Allowance per Table 140.7-A (LZ 2 & 3)

02	03	04	05	06	07	08	09	10
Area Description	Surface Type	Area Wattage Allowance (AWA)			Area Wattage Allowance (AWA)			Total General AWA + LWA (Watts)
		Illuminated Area (ft²)	Allowed Density (W/ft²)	Area Allowance (Watts)	Perimeter Length (lf)	Allowed Density (W/lf)	Linear Allowance (Watts)	
Pedestrian Hardscape	Asphalt	664	0.03	16.6	114	0.4	28.5	45.1
							Initial Wattage Allowance for Entire Site (Watts):	350
							Total General Hardscape Allowance (Watts):	395.1

J. LIGHTING ALLOWANCE: PER APPLICATION

This section does not apply to this project.

K. LIGHTING ALLOWANCE: SALES FRONTAGE

This section does not apply to this project.

L. LIGHTING ALLOWANCE: ORNAMENTAL

This section does not apply to this project.

Registration Number:	Registration Date/Time:	Registration Provider: Energysoft
CA Building Energy Efficiency Standards - 2019 Nonresidential Compliance	Report Version: 2019.0.001 Schema Version: rev 20190401	Report Generated: 2022-03-14 15:02:54

STATE OF CALIFORNIA
Outdoor Lighting
NRCC-LTO-E CALIFORNIA ENERGY COMMISSION

CERTIFICATE OF COMPLIANCE			**NRCC-LTO-E**
Project Name:	Davis Senior High School - New Aquatics Center Pool Mechanical Building	**Report Page:**	**(Page 6 of 9)**
Project Address:	315 W 14th ST.	**Date Prepared:**	3/14/2022

M. LIGHTING ALLOWANCE: PER SPECIFIC AREA

This table includes areas using the wattage allowance per specific area from Table 140.7-B . More than one specific area allowance may be taken in a single project, if applicable. However, multiple specific area allowances may not be taken for the exact same area on the site.

01.		02	03	04	05	06	07	08	09	10
Area Description		Specific Area Type per Table 140.7-B	CALCULATED ALLOWANCE (Watts)			DESIGN WATTS				Additional Allowance (Watts)
			Specific Area (ft²)[1]	Allowed Density (W/ft²)	Extra Allowance (Watts)	Luminaire Name or Item Tag	Watts per Luminaire	# of Luminaires	Design Watts	
Non Sales Canopy (North Side Bldg.)		NonSalesCanopy	94	0.27	25.38	S2	6	4	24	24
								Total Design Watts for this Area:	24	
Non Sales Canopy (West Side Bldg.)		NonSalesCanopy	79	0.27	21.33	S2	6	4	24	21.33
								Total Design Watts for this Area:	24	
								Total Allowance (Watts) All Areas:		45.33

[1] FOOTNOTES: See Table 140.7-B for rules for calculating the specific areas (ft²) for these additional lighting allowances.

[2] For luminaires indicated in Table F as linear, wattage in column 07 is W/lf instead of Watts/luminaire. Total linear feet should be indicated in column 08 instead of number of luminaires.

N. EXISTING CONDITIONS POWER ALLOWANCE (alterations only)

This section does not apply to this project.

O. DECLARATION OF REQUIRED CERTIFICATES OF INSTALLATION

Selections have been made based on information provided in this document. If any selection have been changed by permit applicant, an explanation should be included in Table E. Additional Remarks. These documents must be provided to the building inspector during construction and can be found online at https://www.energy.ca.gov/title24/2019standards/2019_compliance_documents/Nonresidential_Documents/NRCI/

Yes	No	Form/Title	Field Inspector	
			Pass	Fail
●	○	NRCI-LTO-01-E - Must be submitted for all buildings	☐	☐
●	○	NRCI-LTO-02-E- Must be submitted for a lighting control system, or for an Energy Management Control System (EMCS), to be recognized for compliance.	☐	☐

Registration Number:	Registration Date/Time:	Registration Provider: Energysoft
CA Building Energy Efficiency Standards - 2019 Nonresidential Compliance	Report Version: 2019.0.001 Schema Version: rev 20190401	Report Generated: 2022-03-14 15:02:54

STATE OF CALIFORNIA
Outdoor Lighting
NRCC-LTO-E CALIFORNIA ENERGY COMMISSION

CERTIFICATE OF COMPLIANCE			**NRCC-LTO-E**
Project Name:	Davis Senior High School - New Aquatics Center Pool Mechanical Building	**Report Page:**	**(Page 7 of 8)**
Project Address:	315 W 14th ST.	**Date Prepared:**	3/14/2022

P. DECLARATION OF REQUIRED CERTIFICATES OF ACCEPTANCE

Selections have been made based on information provided in this document. If any selection have been changed by permit applicant, an explanation should be included in Table E. Additional Remarks. These documents must be provided to the building inspector during construction and must be completed through an Acceptance Test Technician Certification Provider (ATTCP). For more information visit: http://www.energy.ca.gov/title24/attcp/providers.html

Yes	No	Form/Title	Field Inspector	
			Pass	Fail
●	○	NRCA-LTO-02-A - Must be submitted for all outdoor lighting controls except for alterations where controls are added to <= 20 luminaires.	☐	☐

Registration Number:	Registration Date/Time:	Registration Provider: Energysoft
CA Building Energy Efficiency Standards - 2019 Nonresidential Compliance	Report Version: 2019.0.001 Schema Version: rev 20190401	Report Generated: 2022-03-14 15:02:54

STATE OF CALIFORNIA
Outdoor Lighting
NRCC-LTO-E CALIFORNIA ENERGY COMMISSION

CERTIFICATE OF COMPLIANCE			**NRCC-LTO-E**
Project Name:	Davis Senior High School - New Aquatics Center Pool Mechanical Building	**Report Page:**	**(Page 8 of 9)**
Project Address:	315 W 14th ST.	**Date Prepared:**	3/14/2022

DOCUMENTATION AUTHOR'S DECLARATION STATEMENT

I certify that this Certificate of Compliance documentation is accurate and complete.

Documentation Author Name: Stephen Bakin	Documentation Author Signature:
Company: LPA Design Studios, Inc.	Signature Date: 2022-03-14
Address: 5301 California Ave Suite #100	CEA/ HERS Certification Identification (if applicable):
City/State/Zip: Irvine CA 92617	Phone: (949) 261-1001

RESPONSIBLE PERSON'S DECLARATION STATEMENT

I certify the following under penalty of perjury, under the laws of the State of California:

1. The information provided on this Certificate of Compliance is true and correct .
2. I am eligible under Division 3 of the Business and Professions Code to accept responsibility for the building design or system design identified on this Certificate of Compliance (responsible designer)
3. The energy features and performance specifications, materials, components, and manufactured devices for the building design or system design identified on this Certificate of Compliance conform to the requirements of Title 24, Part 1 and Part 6 of the California Code of Regulations.
4. The building design features or system design features identified on this Certificate of Compliance are consistent with the information provided on other applicable compliance documents, worksheets, calculations, plans and specifications submitted to the enforcement agency for approval with this building permit application.
5. I will ensure that a completed signed copy of this Certificate of Compliance shall be made available with the building permit(s) issued for the building, and made available to the enforcement agency for all applicable inspections. I understand that a completed signed copy of this Certificate of Compliance is required to be included with the documentation the builder provides to the building owner at occupancy.

Responsible Designer Name: Stephen Bakin	Responsible Designer Signature:
Company: LPA Design Studios, Inc.	Date Signed: 2022-03-14
Address: 5301 California Ave Suite #100	License: E-17415
City/State/Zip: Irvine CA 92617	Phone: (949) 261-1001

Registration Number:	Registration Date/Time:	Registration Provider: Energysoft
CA Building Energy Efficiency Standards - 2019 Nonresidential Compliance	Report Version: 2019.0.001 Schema Version: rev 20190401	Report Generated: 2022-03-14 15:02:54

STATE OF CALIFORNIA
Indoor Lighting
NRCC-LTI-E CALIFORNIA ENERGY COMMISSION

CERTIFICATE OF COMPLIANCE			**NRCC-LTI-E**
Project Name:	Davis Senior High School - New Aquatics Center Restroom Building	**Report Page:**	**(Page 1 of 9)**
Project Address:	315 W 14th ST.	**Date Prepared:**	3/14/2022

This document is used to demonstrate compliance with requirements in §110.9, §110.12(c), §130.0, §130.1, §140.6 and §141.0(b)2I for indoor lighting scopes using the prescriptive path.

A. GENERAL INFORMATION

01	Project Location (city)	Davis	04	Total Conditioned Floor Area (ft²)	50
02	Climate Zone	12	05	Total Unconditioned Floor Area (ft²)	1,448
03	Occupancy Types Within Project (select all that apply):		06	# of Stories (Habitable Above Grade)	1

☐ Office ☐ Retail ☐ Warehouse ☐ Hotel/Motel ☒ School ☐ Support Areas
☐ Parking Garage ☐ High-Rise Residential ☐ Relocatable ☐ Healthcare ☐ Other (Write in)

B. PROJECT SCOPE

This table includes any lighting systems that are within the scope of the permit application and are demonstrating compliance using the prescriptive path outlined in §140.6 or §141.0(b)2 for alterations.

Scope of Work	Conditioned Spaces		Unconditioned Spaces	
01	02	03	04	05
My Project Consists of (check all that apply):	Calculation Method	Area (ft²)	Calculation Method	Area (ft²)
☒ New Lighting System	Complete Building Method	50	Complete Building Method	1448
☐ New Lighting System - Parking Garage				
Total Area of Work (ft²)	50		1448	

Registration Number:	Registration Date/Time:	Registration Provider: Energysoft
CA Building Energy Efficiency Standards - 2019 Nonresidential Compliance	Report Version: 2019.0.001 Schema Version: rev 20190401	Report Generated: 2022-03-14 15:03:51

STATE OF CALIFORNIA
Indoor Lighting
NRCC-LTI-E CALIFORNIA ENERGY COMMISSION

CERTIFICATE OF COMPLIANCE			**NRCC-LTI-E**
Project Name:	Davis Senior High School - New Aquatics Center Restroom Building	**Report Page:**	**(Page 2 of 9)**
Project Address:	315 W 14th ST.	**Date Prepared:**	3/14/2022

C. COMPLIANCE RESULTS

If any cell on this table says "DOES NOT COMPLY" or "COMPLIES with Exceptional Conditions" refer to Table D. for guidance.

Lighting in conditioned and unconditioned spaces must be combined for compliance per §140.6(b)1	Allowed Lighting Power per §140.6(b) (Watts)						Adjusted Lighting Power per §140.6(a) (Watts)				Compliance Results
	01	02	03	04		05	06	07		08	09
	Complete Building §140.6(c)1	Area Category §140.6(c)2	Area Category Additional §140.6(c)2D (+)	Tailored §140.6(c)3 (+)	=	Total Allowed (Watts)	Total Designed (Watts)	Adjustments: PAF Lighting Control Credits §140.6(a)2 (-)	=	Total Adjusted (Watts) *Includes Adjustments	05 must be >= 08 §140.6
	[See Table I]	[See Table I]	[See Table J]	[See Table K]			[See Table F]	[See Table P]			
Conditioned	32.5				=	32.5	≥ 31	0	=	31	COMPLIES
Unconditioned	941.2				=	941.2	≥ 873	0	=	873	COMPLIES
								Controls Compliance [See Table H for Details]			COMPLIES
								Rated Power Reduction Compliance [See Table Q for Details]			

D. EXCEPTIONAL CONDITIONS

This table is auto-filled with uneditable comments because of selections made or data entered in tables throughout the form.

E. ADDITIONAL REMARKS

This table includes remarks made by the permit applicant to the Authority Having Jurisdiction.

F. INDOOR LIGHTING FIXTURE SCHEDULE

This table includes all permanent designed lighting and all portable lighting in offices.

Designed Wattage: Conditioned Spaces

01	02	03	04	05	06	07	08	09	10	
Name or Item Tag	Complete Luminaire Description	Modular (Track) Fixture	Small Aperture & Color Change[1]	Watts per luminaire[1]	How is Wattage determined	Total Number of Luminaires	Excluded per §140.6(a)3	Design Watts	Field Inspector	
									Pass	Fail

Registration Number:	Registration Date/Time:	Registration Provider: Energysoft
CA Building Energy Efficiency Standards - 2019 Nonresidential Compliance	Report Version: 2019.0.001 Schema Version: rev 20190401	Report Generated: 2022-03-14 15:03:51

STATE OF CALIFORNIA
Indoor Lighting
NRCC-LTI-E CALIFORNIA ENERGY COMMISSION

CERTIFICATE OF COMPLIANCE			**NRCC-LTI-E**
Project Name:	Davis Senior High School - New Aquatics Center Restroom Building	**Report Page:**	**(Page 3 of 9)**
Project Address:	315 W 14th ST.	**Date Prepared:**	3/14/2022

Designed Wattage: Unconditioned Spaces

01	02	03	04	05	06	07	08	09	10	
Name or Item Tag	Complete Luminaire Description	Modular (Track) Fixture	Small Aperture & Color Change[1]	Watts per luminaire[1]	How is Wattage determined	Total Number of Luminaires	Excluded per §140.6(a)3	Design Watts	Field Inspector	
									Pass	Fail
P1-120	P1-120 - (1) 31W 4' Pendant LED Strip Light	No	No	31	Mfr. Spec	2	No	62	☐	☐
R2	R2 - (1) 11W 4" Square Recessed LED Downlight	No	No	11	Mfr. Spec	17	No	187	☐	☐
R3-14	R3-14 - (1) 56W 14FT Recessed LED Perimeter Wall Slot	No	No	56	Mfr. Spec	2	No	112	☐	☐
R3-6	R3-6 - (1) 24W 6FT Recessed LED Perimeter Wall Slot	No	No	24	Mfr. Spec	1	No	24	☐	☐
R3-7	R3-7 - (1) 28W 7FT Recessed LED Perimeter Wall Slot	No	No	28	Mfr. Spec	4	No	112	☐	☐
R3-8	R3-8 - (1) 32W 7'-4" Recessed LED Perimeter Wall Slot	No	No	32	Mfr. Spec	2	No	64	☐	☐
R3-L1	R3-L1 - (1) 160W L-Shape Recessed LED Perimeter Wall Slot	No	No	160	Mfr. Spec	1	No	160	☐	☐
R3-L2	R3-L2 - (1) 152W L-Shape Recessed LED Perimeter Wall Slot	No	No	152	Mfr. Spec	1	No	152	☐	☐
							Total Designed Watts: UNCONDITIONED SPACES	873		

[1] FOOTNOTE: Design Watts for small aperture and color changing luminaires which qualify per §140.6(a)4B is adjusted to be 75% of their rated wattage. Table F automatically makes this adjustment, the permit applicant should enter full rated wattage in column 05.

Registration Number:	Registration Date/Time:	Registration Provider: Energysoft
CA Building Energy Efficiency Standards - 2019 Nonresidential Compliance	Report Version: 2019.0.001 Schema Version: rev 20190401	Report Generated: 2022-03-14 15:03:51

STATE OF CALIFORNIA
Indoor Lighting
NRCC-LTI-E CALIFORNIA ENERGY COMMISSION

CERTIFICATE OF COMPLIANCE			**NRCC-LTI-E**
Project Name:	Davis Senior High School - New Aquatics Center Restroom Building	**Report Page:**	**(Page 4 of 9)**
Project Address:	315 W 14th ST.	**Date Prepared:**	3/14/2022

F. INDOOR LIGHTING FIXTURE SCHEDULE

[1] Authority Having Jurisdiction may ask for Luminaire cut sheets to confirm wattage used for compliance per §130.0(c). Wattage used must be the maximum rated for the luminaire, not the lamp.

G. MODULAR LIGHTING SYSTEMS

This section does not apply to this project.

H. INDOOR LIGHTING CONTROLS (Not including PAFs)

*This table includes lighting controls for conditioned and unconditioned spaces. When a control having a * is shown, the notes section of this table provides more detail on how compliance is achieved. The lighting controls section of the Compliance Summary Table on the first page will show 'DOES NOT COMPLY" if the notes are left blank.*

Building Level Controls

01	02	03	
		Field Inspector	
Mandatory Demand Response §110.12(c)	Shut-off controls §140.1(c)	Pass	Fail
Not Required <= 10,000 SF	See Area/Space Level Controls	☐	☐

Registration Number:	Registration Date/Time:	Registration Provider: Energysoft
CA Building Energy Efficiency Standards - 2019 Nonresidential Compliance	Report Version: 2019.0.001 Schema Version: rev 20190401	Report Generated: 2022-03-14 15:03:51

STATE OF CALIFORNIA
Indoor Lighting
NRCC-LTI-E CALIFORNIA ENERGY COMMISSION

CERTIFICATE OF COMPLIANCE			**NRCC-LTI-E**
Project Name:	Davis Senior High School - New Aquatics Center Restroom Building	**Report Page:**	**(Page 5 of 9)**
Project Address:	315 W 14th ST.	**Date Prepared:**	3/14/2022

H. INDOOR LIGHTING CONTROLS (Not including PAFs)

Area Level Controls

04	05	06	07	08	09	10	11	12	
Area Description	Complete Building or Area Category Primary Function Area	Area Controls §130.1(a)	Multi-Level Controls §130.1(b)	Shut-Off Controls §130.1(c)	Primary/Skylit Daylighting §130.1(d)	Secondary Daylighting §140.6(d)	Interlocked Systems §140.0(b)1	Field Inspector	
								Pass	Fail
Pool Mechanical 1001	All Others Buildings	Manual ON/OFF	Dimmer	Occupancy Sensor	N/A	N/A	No	☐	☐
Chemical 1002	All Others Buildings	Manual ON/OFF	Dimmer	Occupancy Sensor	N/A	N/A	No	☐	☐
Chemical 1003	All Others Buildings	Manual ON/OFF	Dimmer	Occupancy Sensor	N/A	N/A	No	☐	☐
Electrical 1004	All Others Buildings	Manual ON/OFF	Exempt*	Exempt*	N/A	N/A	No	☐	☐
Storage 1005	All Others Buildings	Manual ON/OFF	Dimmer	Occupancy Sensor	N/A	N/A	No	☐	☐
Office 1006	All Others Buildings	Manual ON/OFF	Dimmer	Occupancy Sensor	N/A	N/A	No	☐	☐
Fire Riser 1019	All Others Buildings	Manual ON/OFF	Dimmer	Occupancy Sensor	N/A	N/A	No	☐	☐

**NOTES: Controls with a * require a note in the space below explaining how compliance is achieved.*
EX: Conference 1: Primary/Skylight Daylighting: Exempt because less than 120 watts of general lighting; EXCEPTION 1 to §130.1(d)2

Electrical 1004	Exception 4 to Section 130.1(c)1	13 Plan Sheet Showing Daylit Zones:

Registration Number:	Registration Date/Time:	Registration Provider: Energysoft
CA Building Energy Efficiency Standards - 2019 Nonresidential Compliance	Report Version: 2019.0.001 Schema Version: rev 20190401	Report Generated: 2022-03-14 15:03:51

STATE OF CALIFORNIA
Indoor Lighting
NRCC-LTI-E CALIFORNIA ENERGY COMMISSION

CERTIFICATE OF COMPLIANCE			**NRCC-LTI-E**
Project Name:	Davis Senior High School - New Aquatics Center Restroom Building	**Report Page:**	**(Page 6 of 9)**
Project Address:	315 W 14th ST.	**Date Prepared:**	3/14/2022

I. LIGHTING POWER ALLOWANCE: COMPLETE BUILDING OR AREA CATEGORY METHODS

Each area complying using the Complete Building or Area Category Methods per §140.6(b), are included in this table. Column 06 indicates if additional lighting power allowances per §140.6(c) or adjustments per §140.6(a) are being used .

Conditioned Spaces

01	02	03	04	05	06	
Area Description	Complete Building or Area Category Primary Function Area	Allowed Density (W/ft²)	Area (ft²)	Allowed Wattage (Watts)	Additional Allowance / Adjustment	
					Area Category	PAF
Whole Building	School Building	0.65	50	32.5	No	No
			TOTALS:	32.5	See Tables J, or P for detail	

Unconditioned Spaces

01	02	03	04	05	06	
Area Description	Complete Building or Area Category Primary Function Area	Allowed Density (W/ft²)	Area (ft²)	Allowed Wattage (Watts)	Additional Allowance / Adjustment	
					Area Category	PAF
Whole Building	School Building	0.65	1,448	941.2	No	No
			TOTALS:	1,448	941.2	See Tables J, or P for detail

J. ADDITIONAL ALLOWANCE: AREA CATEGORY METHOD QUALIFYING LIGHTING SYSTEM

This section does not apply to this project.

K. TAILORED METHOD GENERAL LIGHTING POWER ALLOWANCE

This section does not apply to this project.

L. ADDITIONAL LIGHTING ALLOWANCE: TAILORED WALL DISPLAY

This section does not apply to this project.

M. ADDITIONAL LIGHTING ALLOWANCE: TAILORED FLOOR AND TASK LIGHTING

This section does not apply to this project.

Registration Number:	Registration Date/Time:	Registration Provider: Energysoft
CA Building Energy Efficiency Standards - 2019 Nonresidential Compliance	Report Version: 2019.0.001 Schema Version: rev 20190401	Report Generated: 2022-03-14 15:03:51

IDENTIFICATION STAMP
DIV. OF THE STATE ARCHITECT
APP: 02-119490 INC:
REVIEWED FOR
SS ☑ FLS ☑ ACS ☑
DATE: 09/13/2022

LPA
ARCHITECTURE ENGINEERING INTERIORS
LANDSCAPE ARCHITECTURE PLANNING

916-287-2400 Office
916-287-2401 Fax
LPADesignStudios.com
431 I Street,
Suite 107
Sacramento, California 95814

REGISTERED PROFESSIONAL ENGINEER
STEPHEN BAKIN
E-17415
9/30/23
ELECTRICAL
STATE OF CALIFORNIA

This document and all other project documents, ideas, aesthetics and designs incorporated therein are instruments of service. All project documents are copyright protected, are the property of LPA, Inc. (LPA) and cannot be lawfully used in whole or in part for any project or purpose except as set forth in the contractual agreement between LPA and its Client. The unauthorized disclosure and/or use of the project documents (including the creation of derivative works), may give rise to liability for copyright infringement, unlawful disclosure, use or misappropriation of property rights held by LPA. The unauthorized use of the project documents will give rise to the recovery of monetary losses and damages including attorney fees and costs for which the unauthorized user will be held liable.
Project documents describe the design intent of the work and are not a representation of as-built or existing conditions. LPA is not responsible for any discrepancies between the project documents and the existing conditions.

© LPA, Inc.

DAVIS SENIOR HIGH SCHOOL
NEW AQUATICS CENTER
315 W 14TH ST., DAVIS, CA 95616

Developed for
DAVIS JOINT UNIFIED SCHOOL DISTRICT

Revision	Date

Submittal	Date
50% DESIGN DEVELOPMENT	06/15/2021
100% DD SUBMITTAL	07/26/2021
50% CD REVIEW	10/08/2021
100% CD DSA SUBMITTAL	10/22/2021
DSA SUBMITTAL	03/24/2022

Job Number	1904413
Date Published	03/24/2022
Checked By	LPA
Scale	

ENERGY COMPLIANCE FORMS

E8.02

STATE OF CALIFORNIA
Indoor Lighting
NRCC-ITI-E — CALIFORNIA ENERGY COMMISSION

CERTIFICATE OF COMPLIANCE			**NRCC-LTI-E**
Project Name:	Davis Senior High School - New Aquatics Center Restroom Building	**Report Page:**	**(Page 7 of 9)**
Project Address:	315 W 14th ST	**Date Prepared:**	3/14/2022

N. ADDITIONAL LIGHTING ALLOWANCE: TAILORED ORNAMENTAL/SPECIAL EFFECTS
This section does not apply to this project.

O. ADDITIONAL LIGHTING ALLOWANCE: TAILORED VERY VALUABLE MERCHANDISE
This section does not apply to this project.

P.POWER ADJUSTMENT: LIGHTING CONTROL CREDIT (POWER ADJUSTMENT FACTOR (PAF))
This section does not apply to this project.

Q. RATED POWER REDUCTION COMPLIANCE FOR ALTERATIONS
This section does not apply to this project.

R. 80% LIGHTING POWER FOR ALLATERATIONS - CONTROLS EXCEPTIONS
This section does not apply to this project.

S. DAYLIGHT DESIGN POWER ADJUSTMENT FACTOR (PAF)
This section does not apply to this project.

Registration Number: | Registration Date/Time: | Registration Provider: Energysoft
CA Building Energy Efficiency Standards - 2019 Nonresidential Compliance | Report Version: 2019.0.001 Schema Version: rev 20190401 | Report Generated: 2022-03-14 15:03:51

STATE OF CALIFORNIA
Indoor Lighting
NRCC-ITI-E — CALIFORNIA ENERGY COMMISSION

CERTIFICATE OF COMPLIANCE			**NRCC-LTI-E**
Project Name:	Davis Senior High School - New Aquatics Center Restroom Building	**Report Page:**	**(Page 8 of 9)**
Project Address:	315 W 14th ST	**Date Prepared:**	3/14/2022

T. DECLARATION OF REQUIRED CERTIFICATES OF INSTALLATION
Selections have been made based on information provided in this document. If any selection have been changed by permit applicant, an explanation should be included in Table E. Additional Remarks. These documents must be provided to the building inspector during construction and can be found online at https://www.energy.ca.gov/title24/2019standards/2019_compliance_documents/Nonresidential_Documents/NRCI/

Yes	No.	Form/Title	Field Inspector Pass	Field Inspector Fail
●	○	NRCI-LTI-01-E - Must be submitted for all buildings	☐	☐
○	●	NRCI-LTI-02-E- Must be submitted for a lighting control system, or for an Energy Management Control System (EMCS), to be recognized for compliance.	☐	☐
○	●	NRCI-LTI-04-E - Must be submitted for two interlocked systems serving an auditorium, a convention center, a conference room, a multipurpose room or a theater to be recognized for compliance.	☐	☐
○	●	NRCI-LTI-05-E- Must be submitted for a Power Adjustment Factor (PAF) to be recognized for compliance.	☐	☐
○	●	NRCI-LTI-06-E- Must be submitted for additional wattage installed in a video conferencing studio to be recognized for compliance.	☐	☐

U. DECLARATION OF REQUIRED CERTIFICATES OF ACCEPTANCE
Selections have been made based on information provided in this document. If any selection have been changed by the permit applicant, an explanation should be included in Table E. Additional Remarks. These documents must be provided to the building inspector during construction and any with "A" in the form name must be completed through an Acceptance Test Technician Certification Provider (ATTCP). For more information visit: http://www.energy.ca.gov/title24/attcp/providers.html

Yes	No	Form/Title	Field Inspector Pass	Field Inspector Fail
●	○	NRCA-LTI-02-A - Must be submitted for occupancy sensors and automatic time switch controls.	☐	☐
○	●	NRCA-LTI-03-A - Must be submitted for automatic daylight controls.	☐	☐
○	●	NRCA-LTI-04-A - Must be submitted for demand responsive lighting controls.	☐	☐
○	●	NRCA-LTI-05-A. - Must be submitted for institutional tuning power adjustment factor (PAF)	☐	☐

Registration Number: | Registration Date/Time: | Registration Provider: Energysoft
CA Building Energy Efficiency Standards - 2019 Nonresidential Compliance | Report Version: 2019.0.001 Schema Version: rev 20190401 | Report Generated: 2022-03-14 15:03:51

STATE OF CALIFORNIA
Indoor Lighting
NRCC-ITI-E — CALIFORNIA ENERGY COMMISSION

CERTIFICATE OF COMPLIANCE			**NRCC-LTI-E**
Project Name:	Davis Senior High School - New Aquatics Center Restroom Building	**Report Page:**	**(Page 9 of 9)**
Project Address:	315 W 14th ST	**Date Prepared:**	3/14/2022

DOCUMENTATION AUTHOR'S DECLARATION STATEMENT
I certify that this Certificate of Compliance documentation is accurate and complete.

Documentation Author Name: Stephen Bakin	Documentation Author Signature:
Company: LPA Design Studios, Inc.	Signature Date: 2022-03-14
Address: 5301 California Ave Suite #100	CEA/ HERS Certification Identification (if applicable):
City/State/Zip: Irvine CA 92617	Phone: (949) 261-1001

RESPONSIBLE PERSON'S DECLARATION STATEMENT
I certify the following under penalty of perjury, under the laws of the State of California:
1. The information provided on this Certificate of Compliance is true and correct.
2. I am eligible under Division 3 of the Business and Professions Code to accept responsibility for the building design or system design identified on this Certificate of Compliance (responsible designer)
3. The energy features and performance specifications, materials, components, and manufactured devices for the building design or system design identified on this Certificate of Compliance conform to the requirements of Title 24, Part 1 and Part 6 of the California Code of Regulations.
4. The building design features or system design features identified on this Certificate of Compliance are consistent with the information provided on other applicable compliance documents, worksheets, calculations, plans and specifications submitted to the enforcement agency for approval with this building permit application.
5. I will ensure that a completed signed copy of this Certificate of Compliance shall be made available with the building permit(s) issued for the building, and made available to the enforcement agency for all applicable inspections. I understand that a completed signed copy of this Certificate of Compliance is required to be included with the documentation the builder provides to the building owner at occupancy.

Responsible Designer Name: Stephen Bakin	Responsible Designer Signature:
Company: LPA Design Studios, Inc.	Date Signed: 2022-03-14
Address: 5301 California Ave Suite #100	License: E-17415
City/State/Zip: Irvine CA 92617	Phone: (949) 261-1001

Registration Number: | Registration Date/Time: | Registration Provider: Energysoft
CA Building Energy Efficiency Standards - 2019 Nonresidential Compliance | Report Version: 2019.0.001 Schema Version: rev 20190401 | Report Generated: 2022-03-14 15:03:51

STATE OF CALIFORNIA
Outdoor Lighting
NRCC-LTO-E — CALIFORNIA ENERGY COMMISSION

CERTIFICATE OF COMPLIANCE			**NRCC-LTO-E**
Project Name:	Davis Senior High School - New Aquatics Center Restroom Building	**Report Page:**	**(Page 1 of 8)**
Project Address:	315 W 14th ST	**Date Prepared:**	3/14/2022

A. GENERAL INFORMATION

01	Project Location (city)	Davis	04	Total Illuminated Hardscape Area (ft^2)	2839
02	Climate Zone	12			
03	Outdoor Lighting Zone per Title 24 Part 1 §10.114 or as designated by Authority Having Jurisdiction (AHJ):				
☐	LZ-0: Very Low - Undeveloped Parkland	☐	LZ-2: Moderate - Rural Areas	☐	LZ-4: High - Must be reviewed by CA Energy Commission for Approval
☐	LZ-1: Low - Developed Parkland	☒	LZ-3: Moderately High - Urban Areas		

B. PROJECT SCOPE
This table includes outdoor lighting systems that are within the scope of the permit application and are demonstrating compliance using the prescriptive path outlined in §140.7 or §141.0(b)2i for alterations.

My Project Consists of:

01		02	
☒	New Lighting System	Must Comply with Allowances from §140.7	
☐	Altered Lighting System	Is your alteration increasing the connected lighting load (Watts)?	○ Yes ○ No
03		04	05
% of Existing Luminaires Being Altered[1]		Sum Total of Luminaires Being Added or Altered	Calculation Method
☐ < 10%	☐ >= 10% and < 50% ☐ >= 50%		

Please proceed to Table F. Outdoor Lighting Fixture Schedule to define the project's luminaires.

[1] *FOOTNOTES: % of Existing Luminaires Being Altered = (Sum Total of Luminaires Being Added or Altered / Existing Luminaires within the Scope of the Permit Application) x 100.*

Registration Number: | Registration Date/Time: | Registration Provider: Energysoft
CA Building Energy Efficiency Standards - 2019 Nonresidential Compliance | Report Version: 2019.0.001 Schema Version: rev 20190401 | Report Generated: 2022-03-14 15:04:21

STATE OF CALIFORNIA
Outdoor Lighting
NRCC-LTO-E — CALIFORNIA ENERGY COMMISSION

CERTIFICATE OF COMPLIANCE			**NRCC-LTO-E**
Project Name:	Davis Senior High School - New Aquatics Center Restroom Building	**Report Page:**	**(Page 2 of 8)**
Project Address:	315 W 14th ST	**Date Prepared:**	3/14/2022

C. COMPLIANCE RESULTS
Results in this table are automatically calculated from data input and calculations in Tables F through I. Note: If any cell on this table says "COMPLIES with Exceptional Conditions" refer to Table D. Exceptional Conditions for guidance or see applicable Table referenced below.

Calculations of Total Allowed Lighting Power (Watts) §140.7 or §141.0(b)2i.												Compliance Results			
01		02		03		04		05		06		07		08	09
General Hardscape Allowance §140.7(d)1 (See Table I)	+	Per Application §140.7(d)2 (See Table J)	+	Sales Frontage §140.7(d)3 (See Table K)	+	Ornamental §140.7(d)4 (See Table L)	+	Per Specific Area §140.7(c)1 (See Table M)	OR	Existing Power Allowance §141.0(b)2i1 (See Table N)	+	**Total Allowed** (Watts)	≥	**Total Actual** (Watts)	**07 must be >= 08**
496.23	+	—	+	—	+	—	+	70.47	OR	—	+	566.7	≥	160	COMPLIES
Cutoff Compliance (See Table G for Details)															N/A
Controls Compliance (See Table H for Details)															COMPLIES with Exceptional Conditions

D. EXCEPTIONAL CONDITIONS
This table is auto-filled with uneditable comments because of selections made or data entered in tables throughout the form.

E. ADDITIONAL REMARKS
This table includes remarks made by the permit applicant to the Authority Having Jurisdiction.

Registration Number: | Registration Date/Time: | Registration Provider: Energysoft
CA Building Energy Efficiency Standards - 2019 Nonresidential Compliance | Report Version: 2019.0.001 Schema Version: rev 20190401 | Report Generated: 2022-03-14 15:04:21

STATE OF CALIFORNIA
Outdoor Lighting
NRCC-LTO-E — CALIFORNIA ENERGY COMMISSION

CERTIFICATE OF COMPLIANCE			**NRCC-LTO-E**
Project Name:	Davis Senior High School - New Aquatics Center Restroom Building	**Report Page:**	**(Page 3 of 8)**
Project Address:	315 W 14th ST	**Date Prepared:**	3/14/2022

F. OUTDOOR LIGHTING FIXTURE SCHEDULE
For new or altered lighting systems demonstrating compliance with §140.7, all new luminaires being installed and any existing luminaires remaining or being moved within the spaces covered by the permit application are included in the Table below. For altered lighting systems using the Existing Power method per §141.0(b)2i, only new luminaires being installed and replacement luminaires being installed as part of the project scope are included (ie, existing luminaires remaining or existing luminaires being moved are not included).

Designed Wattage:

01	02	03	04	05	06	07	08	09	10		
Name or Item Tag	Complete Luminaire Description	Watts per luminaire[2, 3]	How is Wattage determined	Total number luminaires[4]	Luminaire Status[5]	Excluded per §140.7(a)	Design Watts	Cutoff Req. >= 6,200 initial lumen output §130.2(b)[4]	Field Inspector Pass	Field Inspector Fail
S2-120	S2-120 - (1) 6W Surface LED Square Downlight	☐ Linear	6	Mfr. Spec	12	New	☐	72	NA: < 6200 lumens	☐	☐
W1-120	W1-120 - (1) 21W Wall Mounted LED	☐ Linear	21	Mfr. Spec	2	New	☐	42	NA: < 6200 lumens.	☐	☐
W2-120	W2-120 - (1) 23W Wall Mounted LED	☐ Linear	23	Mfr. Spec	2	New	☐	46	NA: < 6200 lumens.	☐	☐
						Total Design Watts:		160			

* NOTES: Selections with a * require a note in the space below explaining how compliance is achieved:
EX. Luminaire is lighting a statue; EXCEPTION 2 to §130.0(b)

[2] *FOOTNOTES: Authority Having Jurisdiction may ask for luminaire cut sheets to confirm wattage used for compliance per §130.0(b)*
[3] *For linear luminaires, wattage should be indicated as W/ft instead of Watts/luminaire. Total linear feet should be indicated in column 05 instead of number of luminaires.*
[4] *Select "New" for new luminaires in a new outdoor lighting project, or for added luminaires in an alteration. Select "Altered" for replacement luminaires in an alteration. Select "Existing to Remain" for existing luminaires within the project scope that are not being altered and are remaining. Select "Existing Reinstalled" for existing luminaires which are being removed and reinstalled as part of the project scope.*
[4] *Compliance with mandatory cutoff requirements is required for luminaires with initial lumen output >= 6,200 unless exempted by §130.2(b)*

G. CUTOFF REQUIREMENTS (BUG)
This section does not apply to this project..

Registration Number: | Registration Date/Time: | Registration Provider: Energysoft
CA Building Energy Efficiency Standards - 2019 Nonresidential Compliance | Report Version: 2019.0.001 Schema Version: rev 20190401 | Report Generated: 2022-03-14 15:04:21

STATE OF CALIFORNIA
Outdoor Lighting
NRCC-LTO-E — CALIFORNIA ENERGY COMMISSION

CERTIFICATE OF COMPLIANCE			**NRCC-LTO-E**
Project Name:	Davis Senior High School - New Aquatics Center Restroom Building	**Report Page:**	**(Page 4 of 8)**
Project Address:	315 W 14th ST	**Date Prepared:**	3/14/2022

H. OUTDOOR LIGHTING CONTROLS
This table demonstrates compliance with controls requirements for all new or altered luminaires installed as part of the permit application. For alteration projects, luminaires which are existing to remain (ie untouched) and luminaires which are removed and reinstalled (wiring only) do not need to be included in this table even if they are within the spaces covered by the permit application.
*When an option having a * is selected, the notes section of this table must be completed. The lighting controls section of the Compliance Summary Table on the first page will show "DOES NOT COMPLY" if the notes are left blank.*

Mandatory Controls

01	02	03	04	05	
Area Description	Shut-Off §130.2(c)1	Auto Schedule §130.2(c)2	Motion Sensor §130.2(c)3	Field Inspector Pass	Field Inspector Fail
Pedestrian Hardscape - Fix. Type "W1"	Astronomical Timer	Yes	Exempt*	☐	☐
Non Sales Canopy - Fix. Type "S2-120"	Astronomical Timer	Yes	Exempt*	☐	☐

* NOTES: Controls with a * require a note in the space below explaining how compliance is achieved:
EX. Not permitted by health & safety to be turned off; EXCEPTION 1 to §140.7(c)

Pedestrian Hardscape - Fix. Type "W1"	Exception 1 to Section 130.2(c)3
Non Sales Canopy - Fix. Type "S2-120"	Exception 1 to Section 130.2(c)3

Registration Number: | Registration Date/Time: | Registration Provider: Energysoft
CA Building Energy Efficiency Standards - 2019 Nonresidential Compliance | Report Version: 2019.0.001 Schema Version: rev 20190401 | Report Generated: 2022-03-14 15:04:21

STATE OF CALIFORNIA
Outdoor Lighting
NRCC-LTO-E — CALIFORNIA ENERGY COMMISSION

CERTIFICATE OF COMPLIANCE			**NRCC-LTO-E**
Project Name:	Davis Senior High School - New Aquatics Center Restroom Building	**Report Page:**	**(Page 5 of 8)**
Project Address:	315 W 14th ST	**Date Prepared:**	3/14/2022

I. LIGHTING POWER ALLOWANCE (per §140.7)
This table includes areas using allowance calculations per §140.7. General Hardscape Allowance is per Table 140.7-A while "Use it or lose it" Allowances are per Table 140.7-B. Indicate which allowances are being used to expand sections for user input. Luminaires that qualify for one of the "Use it or lose it" allowances shall not qualify for another "Use it or lose it" allowance.

01				
☒ General Hardscape Allowance Table I (below)	"Use it or lose it" Allowance (select all that apply) (select all that apply)			
	☐ Per Application Table J	☐ Sales Frontage Table K	☐ Ornamental Table L	☒ Per Specific Area Table M

Calculated General Hardscape Lighting Power Allowance per Table 140.7-A (LZ 0, 1 & 4)
This section does not apply to this project.
Calculated General Hardscape Lighting Power Allowance per Table 140.7-A (LZ 2 & 3)

02	03	04	05	06	07	08	9	10
Area Description	Surface Type	Area Wattage Allowance (AWA)			Area Wattage Allowance (AWA)			Total General AWA + LWA (Watts)
		Illuminated Area (ft^2)	Allowed Density (W/ft^2)	Area Allowance (Watts)	Perimeter Length (ft)	Allowed Density (W/ft)	Linear Allowance (Watts)	
Pedestrian Hardscape	Asphalt	2839	0.03	70.975	301	0.4	75.25	146.225
Initial Wattage Allowance for Entire Site (Watts):								350
Total General Hardscape Allowance (Watts):								496.225

J. LIGHTING ALLOWANCE: PER APPLICATION
This section does not apply to this project.

K. LIGHTING ALLOWANCE: SALES FRONTAGE
This section does not apply to this project.

L. LIGHTING ALLOWANCE: ORNAMENTAL
This section does not apply to this project.

Registration Number: | Registration Date/Time: | Registration Provider: Energysoft
CA Building Energy Efficiency Standards - 2019 Nonresidential Compliance | Report Version: 2019.0.001 Schema Version: rev 20190401 | Report Generated: 2022-03-14 15:04:21

STATE OF CALIFORNIA
Outdoor Lighting
NRCC-LTO-E — CALIFORNIA ENERGY COMMISSION

CERTIFICATE OF COMPLIANCE			**NRCC-LTO-E**
Project Name:	Davis Senior High School - New Aquatics Center Restroom Building	**Report Page:**	**(Page 6 of 8)**
Project Address:	315 W 14th ST	**Date Prepared:**	3/14/2022

M. LIGHTING ALLOWANCE: PER SPECIFIC AREA
This table includes areas using the wattage allowance per specific area from Table 140.7-B . More than one specific area allowance may be taken in a single project, if applicable. However, multiple specific area allowances may not be taken for the exact same area on the site.

01	02	03	04	05	06	07	08	09	10
Area Description	Specific Area Type per Table 140.7-B	CALCULATED ALLOWANCE (Watts)			DESIGN WATTS				Additional Allowance (Watts)
		Specific Area (ft^2)[1]	Allowed Density (W/ft^2)	Extra Allowance (Watts)	Luminaire Name or Item Tag	Watts per Luminaire	# of Luminaires	Design Watts	
Non Sales Canopy	NonSalesCanopy	261	0.27	70.47	S2-120	6	12	72	70.47
Total Design Watts for this Area:								72	
Total Allowance (Watts) All Areas:									70.47

[1] *FOOTNOTES: See Table 140.7-B for rules for calculating the specific areas (ft^2 for these additional lighting allowances.*
[2] *For luminaires indicated in Table F as linear, wattage in column 07 is W/ft instead of Watts/luminaire. Total linear feet should be indicated in column 08 instead of number of luminaires.*

N. EXISTING CONDITIONS POWER ALLOWANCE (alterations only)
This section does not apply to this project.

O. DECLARATION OF REQUIRED CERTIFICATES OF INSTALLATION
Selections have been made based on information provided in this document. If any selection have been changed by permit applicant, an explanation should be included in Table E.. Additional Remarks. These documents must be provided to the building inspector during construction and can be found online at https://www.energy.ca.gov/title24/2019standards/2019_compliance_documents/Nonresidential_Documents/NRCI/

Yes	No	Form/Title	Field Inspector Pass	Field Inspector Fail
●	○	NRCI-LTO-01-E - Must be submitted for all buildings	☐	☐
●	○	NRCI-LTO-02-E- Must be submitted for a lighting control system, or for an Energy Management Control System (EMCS), to be recognized for compliance.	☐	☐

Registration Number: | Registration Date/Time: | Registration Provider: Energysoft
CA Building Energy Efficiency Standards - 2019 Nonresidential Compliance | Report Version: 2019.0.001 Schema Version: rev 20190401 | Report Generated: 2022-03-14 15:04:21

STATE OF CALIFORNIA
Outdoor Lighting
NRCC-LTO-E — CALIFORNIA ENERGY COMMISSION

CERTIFICATE OF COMPLIANCE			**NRCC-LTO-E**
Project Name:	Davis Senior High School - New Aquatics Center Restroom Building	**Report Page:**	**(Page 7 of 8)**
Project Address:	315 W 14th ST	**Date Prepared:**	3/14/2022

P. DECLARATION OF REQUIRED CERTIFICATES OF ACCEPTANCE
Selections have been made based on information provided in this document. If any selection have been changed by permit applicant, an explanation should be included in Table E. Additional Remarks. These documents must be provided to the building inspector during construction and must be completed through an Acceptance Test Technician Certification Provider (ATTCP). For more information visit: http://www.energy.ca.gov/title24/attcp/providers.html

Yes	No	Form/Title	Field Inspector Pass	Field Inspector Fail
●	○	NRCA-LTO-02-A - Must be submitted for all outdoor lighting controls except for alterations where controls are added to <= 20 luminaires.	☐	☐

Registration Number: | Registration Date/Time: | Registration Provider: Energysoft
CA Building Energy Efficiency Standards - 2019 Nonresidential Compliance | Report Version: 2019.0.001 Schema Version: rev 20190401 | Report Generated: 2022-03-14 15:04:21

STATE OF CALIFORNIA
Outdoor Lighting
NRCC-LTO-E — CALIFORNIA ENERGY COMMISSION

CERTIFICATE OF COMPLIANCE			**NRCC-LTO-E**
Project Name:	Davis Senior High School - New Aquatics Center Restroom Building	**Report Page:**	**(Page 8 of 8)**
Project Address:	315 W 14th ST	**Date Prepared:**	3/14/2022

DOCUMENTATION AUTHOR'S DECLARATION STATEMENT
I certify that this Certificate of Compliance documentation is accurate and complete.

Documentation Author Name: Stephen Bakin	Documentation Author Signature:
Company: LPA Design Studios, Inc.	Signature Date: 2022-03-14
Address: 5301 California Ave Suite #100	CEA/ HERS Certification Identification (if applicable):
City/State/Zip: Irvine CA 92617	Phone: (949) 261-1001

RESPONSIBLE PERSON'S DECLARATION STATEMENT
I certify the following under penalty of perjury, under the laws of the State of California:
1. The information provided on this Certificate of Compliance is true and correct.
2. I am eligible under Division 3 of the Business and Professions Code to accept responsibility for the building design or system design identified on this Certificate of Compliance (responsible designer)
3. The energy features and performance specifications, materials, components, and manufactured devices for the building design or system design identified on this Certificate of Compliance conform to the requirements of Title 24, Part 1 and Part 6 of the California Code of Regulations.
4. The building design features or system design features identified on this Certificate of Compliance are consistent with the information provided on other applicable compliance documents, worksheets, calculations, plans and specifications submitted to the enforcement agency for approval with this building permit application.
5. I will ensure that a completed signed copy of this Certificate of Compliance shall be made available with the building permit(s) issued for the building, and made available to the enforcement agency for all applicable inspections. I understand that a completed signed copy of this Certificate of Compliance is required to be included with the documentation the builder provides to the building owner at occupancy.

Responsible Designer Name: Stephen Bakin	Responsible Designer Signature:
Company: LPA Design Studios, Inc.	Date Signed: 2022-03-14
Address: 5301 California Ave Suite #100	License: E-17415
City/State/Zip: Irvine CA 92617	Phone: (949) 261-1001

Registration Number: | Registration Date/Time: | Registration Provider: Energysoft
CA Building Energy Efficiency Standards - 2019 Nonresidential Compliance | Report Version: 2019.0.001 Schema Version: rev 20190401 | Report Generated: 2022-03-14 15:04:21

STATE OF CALIFORNIA
Outdoor Lighting
NRCC-LTO-E — CALIFORNIA ENERGY COMMISSION

CERTIFICATE OF COMPLIANCE			**NRCC-LTO-E**
Project Name:	Davis Senior High School - New Aquatics Center Stru	**Report Page:**	**(Page 1 of 8)**
Project Address:	315 W 14th ST	**Date Prepared:**	3/14/2022

A. GENERAL INFORMATION

01	Project Location (city)	Davis	04	Total Illuminated Hardscape Area (ft^2)	23020
02	Climate Zone	12			
03	Outdoor Lighting Zone per Title 24 Part 1 §10.114 or as designated by Authority Having Jurisdiction (AHJ):				
☐	LZ-0: Very Low - Undeveloped Parkland	☐	LZ-2: Moderate - Rural Areas	☐	LZ-4: High - Must be reviewed by CA Energy Commission for Approval
☐	LZ-1: Low - Developed Parkland	☒	LZ-3: Moderately High - Urban Areas		

B. PROJECT SCOPE
This table includes outdoor lighting systems that are within the scope of the permit application and are demonstrating compliance using the prescriptive path outlined in §140.7 or §141.0(b)2i for alterations.

My Project Consists of:

01		02	
☒	New Lighting System	Must Comply with Allowances from §140.7	
☐	Altered Lighting System	Is your alteration increasing the connected lighting load (Watts)?	○ Yes ○ No
03		04	05
% of Existing Luminaires Being Altered[1]		Sum Total of Luminaires Being Added or Altered	Calculation Method
☐ < 10%	☐ >= 10% and < 50% ☐ >= 50%		

Please proceed to Table F. Outdoor Lighting Fixture Schedule to define the project's luminaires.

[1] *FOOTNOTES: % of Existing Luminaires Being Altered = (Sum Total of Luminaires Being Added or Altered / Existing Luminaires within the Scope of the Permit Application) x 100.*

Registration Number: | Registration Date/Time: | Registration Provider: Energysoft
CA Building Energy Efficiency Standards - 2019 Nonresidential Compliance | Report Version: 2019.0.001 Schema Version: rev 20190401 | Report Generated: 2022-03-14 15:05:40

IDENTIFICATION STAMP
DIV. OF THE STATE ARCHITECT
APP: 02-119490 INC:
REVIEWED FOR
SS ☑ FLS ☑ ACS ☑
DATE: 09/13/2022

LPA
ARCHITECTURE ENGINEERING INTERIORS
LANDSCAPE ARCHITECTURE PLANNING

916-287-2400 Office
916-287-2401 Fax
LPADesignStudios.com
431 I Street,
Suite 107
Sacramento, California 95814

REGISTERED PROFESSIONAL ENGINEER
STEPHEN BAKIN
E-17415
09/30/23
ELECTRICAL
STATE OF CALIFORNIA

This document and all other project documents, ideas, aesthetics and designs incorporated therein are instruments of service. All project documents are copyright protected, are the property of LPA, Inc. (LPA) and cannot be lawfully used in whole or in part for any purpose or purpose except as set forth in the contractual agreement between LPA and its Client. The unauthorized disclosure and/or use of the project documents (including the creation of derivative works), may give rise to liability for copyright infringement, unlawful disclosure, use or misappropriation of property rights held by LPA. The unauthorized use of the project documents will give rise to the recovery of monetary losses and damages including attorney fees and costs for which the unauthorized user will be held liable. Project documents describe the design intent of the work and are not a representation of as-built or existing conditions. LPA is not responsible for any discrepancies between the project documents and the existing conditions.

© LPA, Inc.

DAVIS SENIOR HIGH SCHOOL
NEW AQUATICS CENTER
315 W 14TH ST., DAVIS, CA 95616

Developed for
DAVIS JOINT UNIFIED SCHOOL DISTRICT

Revision	Date

Submittal	Date
50% DESIGN DEVELOPMENT	06/15/2021
100% DD SUBMITTAL	07/26/2021
50% CD REVIEW	10/08/2021
100% CD DSA SUBMITTAL	10/22/2021
DSA SUBMITTAL	03/24/2022

Job Number	1904413
Date Published	03/24/2022
Checked By	LPA
Scale	

ENERGY COMPLIANCE FORMS

E8.03

C. COMPLIANCE RESULTS

Results in this table are automatically calculated from data input and calculations in Tables F through I. Note: If any cell on this table says "COMPLIES with Exceptional Conditions" refer to Table D. Exceptional Conditions for guidance or see applicable Table referenced below.

Calculations of Total Allowed Lighting Power (Watts) §140.7 or §141.0(b)2L												Compliance Results		
01		02		03		04		05		06		07		08	09
General Hardscape Allowance §140.7(d)2 (See Table I)	+	Per Application §140.7(d)2 (See Table J)	+	Sales Frontage §140.7(d)2 (See Table K)	+	Ornamental §140.7(d)2 (See Table L)	+	Per Specific Area §140.7(d)2 (See Table M)	OR	Existing Power Allowance §141.0(b)2L (See Table N)	=	Total Allowed (Watts)	≥	Total Actual (Watts)	07 must be >= 08
1,134.25	+	—	+	—	+	—	+	404	OR	—	=	1,538.25	≥	974	COMPLIES
Cutoff Compliance (See Table G for Details)															N/A
Controls Compliance (See Table H for Details)															COMPLIES with Exceptional Conditions

D. EXCEPTIONAL CONDITIONS

This table is auto-filled with uneditable comments because of selections made or data entered in tables throughout the form.

E. ADDITIONAL REMARKS

This table includes remarks made by the permit applicant to the Authority Having Jurisdiction.

F. OUTDOOR LIGHTING FIXTURE SCHEDULE

For new or altered lighting systems demonstrating compliance with §140.7 all new luminaires being installed and any existing luminaires remaining or being moved within the spaces covered by the permit application are included in the Table below. For altered lighting systems using the Existing Power method per §141.0(b)2J, only new luminaires being installed and replacement luminaires being installed as part of the project scope are included (ie, existing luminaires remaining or existing luminaires being moved are not included).

Designed Wattage:

01	02		03	04	05	06	07	08	09	10	
Name or Item Tag	Complete Luminaire Description		Watts per luminaire[1,2]	How is Wattage determined	Total number luminaires[1]	Luminaire Status[3]	Excluded per §140.7(a)	Design Watts	Cutoff Req. > 6,200 initial lumen output §140.7(b)[4]	Field Inspector Pass	Fail
S1	S1 - (1) 32W 4FT Surface Linear LED	☐ Linear	32	Mfr. Spec	10	New	☐	320	NA: < 6200 lumens	☐	☐
W1	W1 - (1) 21W Wall Mounted LED	☐ Linear	21	Mfr. Spec	4	New	☐	84	NA: < 6200 lumens	☐	☐
W1-C	W1-C - (1) 21W Wall Mounted Area LED	☐ Linear	21	Mfr. Spec	4	New	☐	84	NA: < 6200 lumens	☐	☐
ZN1-2	ZN1-2 - (1) 108W 2-Head 30' Event Pole LED	☐ Linear	108	Mfr. Spec	3	New	☐	324	NA: < 6200 lumens	☐	☐
ZN1-3	ZN1-3 - (1) 162W 3-Head 30' Event Pole LED	☐ Linear	162	Mfr. Spec	1	New	☐	162	NA: < 6200 lumens	☐	☐
							Total Design Watts:	974			

* NOTES: Selections with a * require a note in the space below explaining how compliance is achieved:
EX: Luminaire is lighting a statue; EXCEPTION 2 to §130.0(b)

[1] FOOTNOTES: Authority Having Jurisdiction may ask for Luminaire cut sheets to confirm wattage used for compliance per §130.0(c)
[2] For linear luminaires, wattage should be indicated as W/ft instead of Watts/luminaire. Total linear feet should be indicated in column 05 instead of number of luminaires.
[3] Select "New" for new luminaires in a new outdoor lighting project, or for added luminaires in an alteration. Select "Altered" for replacement luminaires in an alteration. Select "Existing to Remain" for existing luminaires within the project scope that are not being altered and are remaining. Select "Existing Reinstalled" for existing luminaires which are being removed and reinstalled as part of the project scope.
[4] Compliance with mandatory cutoff requirements is required for luminaires with initial lumen output >= 6,200 unless exempted by §140.7(b)

G. CUTOFF REQUIREMENTS (BUG)

This section does not apply to this project.

H. OUTDOOR LIGHTING CONTROLS

This table demonstrates compliance with controls requirements for all new or altered luminaires installed as part of the permit application. For alteration projects, luminaires which are existing to remain (ie untouched) and luminaires which are removed and reinstalled (wiring only) do not need to be included in this table even if they are within the spaces covered by the permit application.
*When an option having a * is selected, the notes section of this table must be completed. The lighting controls section of the Compliance Summary Table on the first page will show "DOES NOT COMPLY" if the notes are left blank.*

Mandatory Controls

01	02	03	04	05	
Area Description	Shut-Off §130.2(c)1	Auto Schedule §130.2(c)2	Motion Sensor §130.2(c)3	Field Inspector Pass	Fail
Bleacher Canopy	Astronomical Timer	Yes	Exempt*	☐	☐
Pedestrian Hardscape (Open Storage Area)	Astronomical Timer	Yes	Exempt*	☐	☐
Pedestrian Hardscape (Pool Deck)	Astronomical Timer	Yes	Yes	☐	☐

** NOTES: Controls with a * require a note in the space below explaining how compliance is achieved.*
EX: Not permitted by health & safety to be turned off; EXCEPTION 1 to §130.2(c)

Bleacher Canopy	Exception 1 to Section 130.2(c)3
Pedestrian Hardscape (Open Storage Area)	Exception 1 to Section 130.2(c)3

I. LIGHTING POWER ALLOWANCE (per §140.7)

This table includes areas using allowance calculations per §140.7. General Hardscape Allowance is per Table 140.7-A while "Use it or lose it" Allowances are per Table 140.7-B. Indicate which allowances are being used to expand sections for user input. Luminaires that qualify for one of the "Use it or lose it" allowances shall not qualify for another "Use it or lose it" allowance.

01
☒ General Hardscape Allowance Table I (below)

01 "Use it or lose it" Allowance (select all that apply)		
☐ Per Application Table J	☐ Sales Frontage Table K	☐ Ornamental Table L

☒ Per Specific Area Table M

Calculated General Hardscape Lighting Power Allowance per Table 140.7-A (L2 0; 1 & 4)
This section does not apply to this project.
Calculated General Hardscape Lighting Power Allowance per Table 140.7-A (L2 2 & 3)

02	03	04	05	06	07	08	9	10
Area Description	Surface Type	Area Wattage Allowance (AWA) Illuminated Area (ft²)	Allowed Density (W/ft²)	Area Allowance (Watts)	Area Wattage Allowance (AWA) Perimeter Length (ft)	Allowed Density (W/ft)	Linear Allowance (Watts)	Total General AWA = LWA (Watts)
Pedestrian Hardscape (Open Storage Area)	Asphalt	607	0.03	15.175	141	0.4	35.25	50.425
Pedestrian Hardscape (Pool Deck)	Asphalt	22413	0.03	560.325	694	0.4	173.5	733.825
							Initial Wattage Allowance for Entire Site (Watts):	350
							Total General Hardscape Allowance (Watts):	1134.25

J. LIGHTING ALLOWANCE: PER APPLICATION

This section does not apply to this project.

K. LIGHTING ALLOWANCE: SALES FRONTAGE

This section does not apply to this project.

L. LIGHTING ALLOWANCE: ORNAMENTAL

This section does not apply to this project.

M. LIGHTING ALLOWANCE: PER SPECIFIC AREA

This table includes areas using the wattage allowance per specific area from Table 140.7-B . More than one specific area allowance may be taken in a single project, if applicable. However, multiple specific area allowances may not be taken for the exact same area on the site.

01	02	03	04	05	06	07	08	09	10
Area Description	Specific Area Type per Table 140.7-B	CALCULATED ALLOWANCE (Watts) Specific Area (ft²)[1]	Allowed Density (W/ft²)	Extra Allowance (Watts)	DESIGN WATTS Luminaire Name or Item Tag	Watts per Luminaire	# of Luminaires	Design Watts	Additional Allowance (Watts)
Bleacher Canopy	NonSalesCanopy	1642	0.27	443.34	S1	32	10	320	404
					W1-C	21	4	84	
							Total Design Watts for this Area:	404	
							Total Allowance (Watts) All Areas:		404

[1] FOOTNOTES: See Table 140.7-B for rules for calculating the specific area (ft²) for these additional lighting allowances.
[2] For luminaires indicated in Table F as linear, wattage in column D7 is W/ft instead of Watts/luminaire. Total linear feet should be indicated in column D8 instead of number of luminaires.

N. EXISTING CONDITIONS POWER ALLOWANCE (alterations only)

This section does not apply to this project.

O. DECLARATION OF REQUIRED CERTIFICATES OF INSTALLATION

Selections have been made based on information provided in this document. If any selection have been changed by permit applicant, an explanation should be included in Table E. Additional Remarks. These documents must be provided to the building inspector during construction and can be found online at https://www.energy.ca.gov/title24/2019standards/2019_compliance_documents/Nonresidential_Documents/NRCI/

Yes	No	Form/Title	Field Inspector Pass	Fail
●	○	NRCI-LTO-01-E - Must be submitted for all buildings	☐	☐
●	○	NRCI-LTO-02-E- Must be submitted for a lighting control system, or for an Energy Management Control System (EMCS), to be recognized for compliance.	☐	☐

P. DECLARATION OF REQUIRED CERTIFICATES OF ACCEPTANCE

Selections have been made based on information provided in this document. If any selection have been changed by permit applicant, an explanation should be included in Table E. Additional Remarks. These documents must be provided to the building inspector during construction and must be completed through an Acceptance Test Technician Certification Provider (ATTCP). For more information visit: http://www.energy.ca.gov/title24/attcp/providers.html

Yes	No	Form/Title	Field Inspector Pass	Fail
●	○	NRCA-LTO-02-A - Must be submitted for all outdoor lighting controls except for alterations where controls are added to <= 20 luminaires.	☐	☐

DOCUMENTATION AUTHOR'S DECLARATION STATEMENT

I certify that this Certificate of Compliance documentation is accurate and complete.

Documentation Author Name: Stephen Bakin	Documentation Author Signature:
Company: LPA Design Studios, Inc.	Signature Date: 2022-03-14
Address: 5301 California Ave Suite #100	CEA/ HERS Certification Identification (if applicable):
City/State/Zip: Irvine CA 92617	Phone: (949) 261-1001

RESPONSIBLE PERSON'S DECLARATION STATEMENT

I certify the following under penalty of perjury, under the laws of the State of California:
1. The information provided on this Certificate of Compliance is true and correct.
2. I am eligible under Division 3 of the Business and Professions Code to accept responsibility for the building design or system design identified on this Certificate of Compliance (responsible designer)
3. The energy features and performance specifications, materials, components, and manufactured devices for the building design or system design identified on this Certificate of Compliance conform to the requirements of Title 24, Part 1 and Part 6 of the California Code of Regulations.
4. The building design features or system design features identified on this Certificate of Compliance are consistent with the information provided on other applicable compliance documents, worksheets, calculations, plans and specifications submitted to the enforcement agency for approval with this building permit application.
5. I will ensure that a completed signed copy of this Certificate of Compliance shall be made available with the building permit(s) issued for the building, and made available to the enforcement agency for all applicable inspections. I understand that a completed signed copy of this Certificate of Compliance is required to be included with the documentation the builder provides to the building owner at occupancy.

Responsible Designer Name: Stephen Bakin	Responsible Designer Signature:
Company: LPA Design Studios, Inc.	Date Signed: 2022-03-14
Address: 5301 California Ave Suite #100	License: E-17415
City/State/Zip: Irvine CA 92617	Phone: (949) 261-1001

This document is used to demonstrate compliance with requirements in §110.9, §110.12, §130.0, §130.3, §140.8, and §141.0(b)2M for sign lighting scopes using the prescriptive path. Exit signs and traffic signs are not required to comply with prescriptive requirements per exceptions to §140.8 and do not need to complete this compliance document.

A. GENERAL INFORMATION

01	Project Location (city)	Davis
02	Climate Zone	12
03	Building is a healthcare facility	No

B. PROJECT SCOPE

This table includes illuminated signs that are within the scope of the permit application and are demonstrating compliance using the prescriptive path outlined in §140.8 or §141.0(b)2M for alterations. Exit signs and traffic signs are not required to comply with prescriptive requirements per exceptions to §140.8 and do not need to complete this compliance document.

01	02	03	04	05
Name or Item Tag	Complete Sign Description	Sign Status[1]	Sign Type	Compliance Method[2]
S	Davis HS Aquatics Center Sign	New	Outdoor	Max Allowed Lighting Power

[1] FOOTNOTE: Sign alterations that increase the connected lighting load, replace and rewire more that 50% of the ballasts, or relocate the sign to a different location must comply with §140.8. See §141.0(b)2M for more details.
[2] The ENERGY VERIFIED Label compliance method is only applicable if the sign has a permanent, factory-installed, ENERGY VERIFIED label certified by UL or comparable, confirming the sign complies with §140.8. Note that using an ENERGY VERIFIED label is an optional compliance path, not a mandatory requirement. See the tooltips for this table for more details.

C. COMPLIANCE RESULTS

Results in this table are automatically calculated from data input and calculations in Tables B through H. Note: If any cell on this table says "COMPLIES with Exceptional Conditions" refer to Table D. Exceptional Conditions for guidance or see applicable Table referenced below.

01	02	03		04		05		06		07
Name or Item Tag (See Table B)	Complete Sign Description (See Table B)	Total Allowed (Watts) (See Table F)	≥	Total Designed (Watts) (See Table F)	OR	Compliant Light Sources (See Table G)	OR	ENERGY VERIFIED Label (See Table H)		Compliance Results
S	Davis HS Aquatics Center Sign	185.04	≥	144	OR		OR			COMPLIES
						Controls Compliance (See Table F/G/H for Details)				COMPLIES

D. EXCEPTIONAL CONDITIONS

This table is auto-filled with uneditable comments because of selections made or data entered in tables throughout the form.

E. ADDITIONAL REMARKS

This table is includes remarks made by the permit applicant to the Authority Having Jurisdiction.

F. MAXIMUM ALLOWED LIGHTING POWER AND CONTROLS

This table includes illuminated signs using the Maximum Allowed Lighting Power compliance method per §140.8(a) as indicated on Table B of this compliance document. It also demonstrates compliance with mandatory controls requirements from §130.3 by indicating control types for each sign.

01	02	03	04	05	06	07	08			09	
Name or Item Tag	Complete Sign Description	Illumination Method	Sign Area (ft²)	Allowed Density (W/ft²)	Allowance (Watts)	Design Watts	Mandatory Controls Shut-Off	Dimming	Demand Response[1]	Field Inspector Pass	Fail
S	Davis HS Aquatics Center Sign	Internally	15.42	12	185.04	144	Automatic Time Switch + Photocontrol	Exempt*	NA	☐	☐

** NOTES: Controls with a * require a note in the space below explaining how compliance is achieved. EX: Sign within tunnel illuminated day and night; EXCEPTION to 130.3(a)2A.*

[1] FOOTNOTE: Demand response controls are only required for an Electronic Message Center having a new connected lighting power load greater than 15 kW per §110.12(d)

G. LIGHT SOURCES AND CONTROLS

This section does not apply to this project.

H. ENERGY VERIFIED LABELED SIGNS AND CONTROLS

This section does not apply to this project.

I. DECLARATION OF REQUIRED CERTIFICATES OF INSTALLATION

Selections have been made based on information provided in this document. If any selection have been changed by permit applicant, an explanation should be included in Table E. Additional Remarks. These documents must be provided to the building inspector during construction and can be found online at https://www.energy.ca.gov/title24/2019standards/2019_compliance_documents/Nonresidential_Documents/NRCI/

Yes	No	Form/Title	Field Inspector Pass	Fail
●	○	NRCI-LTS-01-E - Must be submitted for all buildings	☐	☐

J. DECLARATION OF REQUIRED CERTIFICATES OF ACCEPTANCE

There are no Certificates of Acceptance applicable to sign lighting requirements.

DOCUMENTATION AUTHOR'S DECLARATION STATEMENT

I certify that this Certificate of Compliance documentation is accurate and complete.

Documentation Author Name: Stephen Bakin	Documentation Author Signature:
Company: LPA Design Studios, Inc.	Signature Date: 2022-05-24
Address: 5301 California Ave Suite #100	CEA/ HERS Certification Identification (if applicable):
City/State/Zip: Irvine CA 92617	Phone: (949) 261-1001

RESPONSIBLE PERSON'S DECLARATION STATEMENT

I certify the following under penalty of perjury, under the laws of the State of California:
1. The information provided on this Certificate of Compliance is true and correct.
2. I am eligible under Division 3 of the Business and Professions Code to accept responsibility for the building design or system design identified on this Certificate of Compliance (responsible designer)
3. The energy features and performance specifications, materials, components, and manufactured devices for the building design or system design identified on this Certificate of Compliance conform to the requirements of Title 24, Part 1 and Part 6 of the California Code of Regulations.
4. The building design features or system design features identified on this Certificate of Compliance are consistent with the information provided on other applicable compliance documents, worksheets, calculations, plans and specifications submitted to the enforcement agency for approval with this building permit application.
5. I will ensure that a completed signed copy of this Certificate of Compliance shall be made available with the building permit(s) issued for the building, and made available to the enforcement agency for all applicable inspections. I understand that a completed signed copy of this Certificate of Compliance is required to be included with the documentation the builder provides to the building owner at occupancy.

Responsible Designer Name: Stephen Bakin	Responsible Designer Signature:
Company: LPA Design Studios, Inc.	Date Signed: 2022-05-24
Address: 5301 California Ave Suite #100	License: E-17415
City/State/Zip: Irvine CA 92617	Phone: (949) 261-1001

This document is used to demonstrate compliance with mandatory requirements in §110.10 for newly constructed buildings which are either high-rise multifamily ten stories or fewer, hotel/motel ten stories or fewer or all other nonresidential buildings three stories or fewer. It is also used to demonstrate compliance with additions to these building types which add more than 2,000 ft² of roof area. Alterations or additions of less than 2,000ft² are not required to comply with §110.10.

A. GENERAL INFORMATION

01	Project Location (city)	Davis	04	Building Type	Building with total roof area ≥33 ft2
02	Climate Zone	12	05	Construction Type	New Construction
03	☐ Roof is designed for vehicle traffic, parking or for heliport				
03a	Plan sheet showing roof design for vehicle traffic, parking or heliport exception:				

B. PROJECT SCOPE

The compliance path the project is using to comply per §110.10(b)1B is indicated below.

My project consists of (check one):

		1
☒	Provide Solar Ready Area no exceptions	The project has allocated a solar zone on the roof plan per requirements in §110.10(b), as documented in Table F.
☐	Exception to Solar Ready Area: Installed Solar Photovoltaic System	The project includes a permanently installed solar electric system having a nameplate DC power rating, measured under Standard Test Conditions, of no less than one watt per square foot of roof area as documented in Table G.
	Exception to Solar Ready Area: Installed Solar Water Heating System	The project is a hotel/motel or high-rise multifamily occupancy and includes a permanently installed domestic solar water-heating system complying with §150.1(c)8Biii and Reference Residential Appendix RA4, as documented in Table H.
	Exception to Solar Ready Area: Smart Thermostat and Alternative Energy Efficiency Measure	The project is a high-rise multifamily occupancy where all thermostats in each dwelling unit comply with §110.12(c), AND at least one additional measure listed in Exception 4 to §110.10(b)1B is installed, as documented in Table I.

IDENTIFICATION STAMP
DIV. OF THE STATE ARCHITECT
APP: 02-119490 INC:
REVIEWED FOR
SS ☑ FLS ☑ ACS ☑
DATE: 09/13/2022

LPA
ARCHITECTURE ENGINEERING INTERIORS
LANDSCAPE ARCHITECTURE PLANNING
916-287-2400 Office
916-287-2401 Fax
LPADesignStudios.com
431 I Street,
Suite 107
Sacramento, California 95814

REGISTERED PROFESSIONAL ENGINEER STEPHEN BAKIN E-17415 9/30/23 ELECTRICAL STATE OF CALIFORNIA

This document and all other project documents, ideas, aesthetics and designs incorporated therein are instruments of service. All project documents are copyright protected, are the property of LPA, Inc. (LPA) and cannot be lawfully used in whole or in part for any project or purpose except as set forth in the contractual agreement between LPA and its Client. The unauthorized disclosure and/or use of the project documents (including the creation of derivative works), may give rise to liability for copyright infringement, unlawful disclosure, use or misappropriation of property rights held by LPA. The unauthorized use of the project documents will give rise to the recovery of monetary losses and damages including attorney fees and costs for which the unauthorized user will be held liable.
Project documents describe the design intent of the work and are not a representation of as-built or existing conditions. LPA is not responsible for any discrepancies between the project documents and the existing conditions.
© LPA, Inc.

DAVIS SENIOR HIGH SCHOOL
NEW AQUATICS CENTER
315 W 14TH ST., DAVIS, CA 95616

Developed for
DAVIS JOINT UNIFIED SCHOOL DISTRICT

Revision	Date

Submittal	Date
50% DESIGN DEVELOPMENT	06/15/2021
100% DD SUBMITTAL	07/26/2021
50% CD REVIEW	10/08/2021
100% CD DSA SUBMITTAL	10/22/2021
DSA SUBMITTAL	03/24/2022

Job Number	1904413
Date Published	03/24/2022
Checked By	LPA
Scale	

ENERGY COMPLIANCE FORMS

E8.04

STATE OF CALIFORNIA

Solar Ready Areas

NRCC-SRA-E

CALIFORNIA ENERGY COMMISSION

CERTIFICATE OF COMPLIANCE			NRCC-SRA-E
Project Name:	Davis Senior High School - New Aquatics Center Pool Mechanical Building	**Report Page:**	**(Page 2 of 5)**
Project Address:	315 W 14th ST.	**Date Prepared:**	5/24/2022

C. COMPLIANCE RESULTS

Results in this table are automatically calculated from data input and calculations in Tables F through I. Note: If any cell on this table says "DOES NOT COMPLY" or "COMPLIES with Exceptional Conditions" refer to Table D. for guidance or see the applicable Table referenced below.

Allocated Solar Zone				Installed PV System				Installed SWH System				Smart Tstat and Alternative EE Measure		
01		02		03		04		05		06		07	08	09
Required Minimum Area (ft^2)	<=	Designated Area (ft^2)	OR	Required Minimum DC Power Rating (Watts)	<=	Designed DC Power Rating (Watts)	OR	Required Minimum Solar Savings Fraction	<=	Designed/Rated Solar Savings Fraction	OR	JA5 Compliant Thermostat Specified?	Alternative Energy Efficiency Measure	
(See Table F)				(See Table G)				(See Table H)				(See Table I)		COMPLIES
30.6	<=	1480.1	OR		<=		OR		<=		OR			
E8.06				Location within the construction documents showing the location for inverters and metering equipment and a pathway for the routing of conduit/plumbing to the electrical service/ water heating system per §110.10(c).										COMPLIES

D. EXCEPTIONAL CONDITIONS

This table is auto-filled with uneditable comments because of selections made or data entered in tables throughout the form.

E. ADDITIONAL REMARKS

This table is includes remarks made by the permit applicant to the Authority Having Jurisdiction.

Registration Number:	Registration Date/Time:	Registration Provider: Energysoft
CA Building Energy Efficiency Standards - 2019 Nonresidential Compliance	Report Version: 2019.0.001 Schema Version: rev 20190401	Report Generated: 2022-05-24 16:24:18

STATE OF CALIFORNIA

Solar Ready Areas

NRCC-SRA-E

CALIFORNIA ENERGY COMMISSION

CERTIFICATE OF COMPLIANCE			NRCC-SRA-E
Project Name:	Davis Senior High School - New Aquatics Center Pool Mechanical Building	**Report Page:**	**(Page 3 of 5)**
Project Address:	315 W 14th ST.	**Date Prepared:**	5/24/2022

F. ALLOCATED SOLAR ZONE

This table is completed if the project is designating a solar zone to comply with §110.10(b)1B. New construction consider the total roof area; Additions consider newly added roof area. This table demonstrates that the project has designated the minimum area required for the Allocated Solar Zone, and also that the requirements for Solar Zone Subareas have been met. Each subarea must be shown on a roof plan or documented in construction documents. The solar zones must also comply with fire code requirements, including, but not limited to, setback and pathway requirements. Requirements for interconnection pathways must also be included in construction documents, and the location is specified in this table.

Required Minimum Solar Zone

01	02	03	04	05	06			07	08
					Potential Solar Zone Areas: Roof areas with >= 70% Solar Access				
Minimum Solar Zone Area Calculation Method	Total New or Added Roof Area (ft^2)	Total New or Added Roof Area Covered with Skylights (ft^2)	Minimum Solar Zone Based on Total or Added Roof Area (0.15 x (Roof-Skylt)) (ft^2)	Method/ Tools Used to Determine Annual Solar Access for Potential Zones[1]	Low-Sloped Area (<= 2:12 pitch) (ft^2)	Steep-Sloped Area (> 2:12 pitch) Oriented 90 ° - 300 ° (ft^2)	Total Potential Solar Zone Area (ft^2)	Minimum Solar Zone Based on Potential Zone (0.5 x (Total Potential Zone)) (ft^2)	Required Minimum Solar Zone Area (ft^2)
Total New or Added Roof Area	204	0	30.6						30.6

Designated Solar Zone Subareas

09	10	11	12	13	14	15	16	17	18	19
Subarea Name or Tag	Building Plan Reference	Roof or Overhang Slope (Low <= 2:12 pitch) (Steep > 2:12 pitch)	Is Steep-Sloped Roof or Overhang between 90 and 300 degrees?	Subarea Complies with Title 24, Part 9	Solar Zone Subarea Free of Obstructions per §110.10(b)3A	Subarea is Required Distance from Potential Obstructions per §110.10(b)3B	Is the Smallest Dimension 5 feet or greater?	Min. Area Required per Subarea (ft^2)	Designated Area (ft^2)	Subarea Complies?
Pool Mech. Building Roof	E2.22	LowSlope	No	Yes	Yes	Yes	Yes	80	1480.1	COMPLIES
								Total Designated Solar Zone Area (ft^2):	1480.1	

Registration Number:	Registration Date/Time:	Registration Provider: Energysoft
CA Building Energy Efficiency Standards - 2019 Nonresidential Compliance	Report Version: 2019.0.001 Schema Version: rev 20190401	Report Generated: 2022-05-24 16:24:18

STATE OF CALIFORNIA

Solar Ready Areas

NRCC-SRA-E

CALIFORNIA ENERGY COMMISSION

CERTIFICATE OF COMPLIANCE			NRCC-SRA-E
Project Name:	Davis Senior High School - New Aquatics Center Pool Mechanical Building	**Report Page:**	**(Page 4 of 5)**
Project Address:	315 W 14th ST.	**Date Prepared:**	5/24/2022

Interconnection Pathways

Location in construction documents showing the location for inverters and metering equipment and a pathway for the routing of conduit/ plumbing to the electrical service/ water heating system per §110.10(c).	E8.06

FOOTNOTE: This field is used to document how the percentage of annual solar access was determined per §110.10(b)1B. Solar access is the ratio of solar insolation including shade to the solar insolation without shade. Shading from obstructions located on the roof or any other part of the building shall not be included in the determination of annual solar access.

G. PERMANENTLY INSTALLED SOLAR PHOTOVOLTAIC (PV) SYSTEM

This section does not apply to this project.

H. PERMANENTLY INSTALLED SOLAR HOT WATER SYSTEMS

This section does not apply to this project.

I. SMART THERMOSTATS AND ALTERNATIVE EFFICIENCY MEASURE

This section does not apply to this project.

J. DECLARATION OF REQUIRED CERTIFICATES OF INSTALLATION

Selections have been made based on information provided in this document. If any selections have been changed by the permit applicant, an explanation should be included Table E. Additional Remarks. These documents must be provided to the building inspector during construction and can be found online at https://www.energy.ca.gov/title24/2019standards/2019_compliance_documents/Nonresidential_Documents/NRCI/

Yes	No	Form/Title	Field Inspector	
			Pass	Fail
	●	NRCI-SPV-01-E - Must be submitted for all newly installed Photovoltaic Systems (PV) being used to comply with §110.10(b)1B for high-rise multifamily, Hotel/Motel buildings less than 10 stories and nonresidential buildings less than 4 stories.	☐	☐
	●	NRCI-STH-01-E - Must be submitted for all newly installed Solar Water Heating systems being used to comply with §110.10(b)1B for high-rise multifamily, Hotel/Motel buildings less than 10 stories and nonresidential buildings less than 4 stories.	☐	☐

K. DECLARATION OF REQUIRED CERTIFICATES OF ACCEPTANCE

There are no Certificates of Acceptance applicable to solar ready requirements.

Registration Number:	Registration Date/Time:	Registration Provider: Energysoft
CA Building Energy Efficiency Standards - 2019 Nonresidential Compliance	Report Version: 2019.0.001 Schema Version: rev 20190401	Report Generated: 2022-05-24 16:24:18

STATE OF CALIFORNIA

Solar Ready Areas

NRCC-SRA-E

CALIFORNIA ENERGY COMMISSION

CERTIFICATE OF COMPLIANCE			NRCC-SRA-E
Project Name:	Davis Senior High School - New Aquatics Center Pool Mechanical Building	**Report Page:**	**(Page 5 of 5)**
Project Address:	315 W 14th ST.	**Date Prepared:**	5/24/2022

DOCUMENTATION AUTHOR'S DECLARATION STATEMENT

I certify that this Certificate of Compliance documentation is accurate and complete.

Documentation Author Name: Stephen Bakin	Documentation Author Signature:
Company: LPA Design Studios, Inc.	Signature Date: 2022-05-24
Address: 5301 California Ave Suite #100	CEA/ HERS Certification Identification (if applicable):
City/State/Zip: Irvine CA 92617	Phone: (949) 261-1001

RESPONSIBLE PERSON'S DECLARATION STATEMENT

I certify the following under penalty of perjury, under the laws of the State of California:

1. The information provided on this Certificate of Compliance is true and correct.
2. I am eligible under Division 3 of the Business and Professions Code to accept responsibility for the building design or system design identified on this Certificate of Compliance (responsible designer)
3. The energy features and performance specifications, materials, components, and manufactured devices for the building design or system design identified on this Certificate of Compliance conform to the requirements of Title 24, Part 1 and Part 6 of the California Code of Regulations.
4. The building design features or system design features identified on this Certificate of Compliance are consistent with the information provided on other applicable compliance documents, worksheets, calculations, plans and specifications submitted to the enforcement agency for approval with this building permit application.
5. I will ensure that a completed signed copy of this Certificate of Compliance shall be made available with the building permit(s) issued for the building, and made available to the enforcement agency for all applicable inspections. I understand that a completed signed copy of this Certificate of Compliance is required to be included with the documentation the builder provides to the building owner at occupancy.

Responsible Designer Name: Stephen Bakin	Responsible Designer Signature:
Company: LPA Design Studios, Inc.	Date Signed: 2022-05-24
Address: 5301 California Ave Suite #100	License: E-17415
City/State/Zip: Irvine CA 92617	Phone: (949) 261-1001

Registration Number:	Registration Date/Time:	Registration Provider: Energysoft
CA Building Energy Efficiency Standards - 2019 Nonresidential Compliance	Report Version: 2019.0.001 Schema Version: rev 20190401	Report Generated: 2022-05-24 16:24:18

IDENTIFICATION STAMP
DIV. OF THE STATE ARCHITECT
APP: 02-119490 INC:
REVIEWED FOR
SS ☑ FLS ☑ ACS ☑
DATE: 09/13/2022

LPA

ARCHITECTURE ENGINEERING INTERIORS
LANDSCAPE ARCHITECTURE PLANNING

916-287-2400 Office

916-287-2401 Fax

LPADesignStudios.com

431 I Street,
Suite 107
Sacramento, California 95814

REGISTERED PROFESSIONAL ENGINEER
STEPHEN BAKIN
E-17415
9/30/23
ELECTRICAL
STATE OF CALIFORNIA

This document and all other project documents, ideas, aesthetics and designs incorporated therein are instruments of service. All project documents are copyright protected, are the property of LPA, Inc. (LPA) and cannot be lawfully used in whole or in part for any project or purpose except as set forth in the contractual agreement between LPA and its Client. The unauthorized disclosure and/or use of the project documents (including the creation of derivative works), may give rise to liability for copyright infringement, unlawful disclosure, use or misappropriation of property rights held by LPA. The unauthorized use of the project documents will give rise to the recovery of monetary losses and damages including attorney fees and costs for which the unauthorized user will be held liable.
Project documents describe the design intent of the work and are not a representation of as-built or existing conditions. LPA is not responsible for any discrepancies between the project documents and the existing conditions.

© LPA, Inc.

DAVIS SENIOR HIGH SCHOOL
NEW AQUATICS CENTER
315 W 14TH ST., DAVIS, CA 95616

Developed for
DAVIS JOINT UNIFIED SCHOOL DISTRICT

Revision	Date

Submittal	Date
50% DESIGN DEVELOPMENT	06/15/2021
100% DD SUBMITTAL	07/26/2021
50% CD REVIEW	10/08/2021
100% CD DSA SUBMITTAL	10/22/2021
DSA SUBMITTAL	03/24/2022

Job Number	1904413
Date Published	03/24/2022
Checked By	LPA
Scale	

ENERGY COMPLIANCE FORMS

E8.05

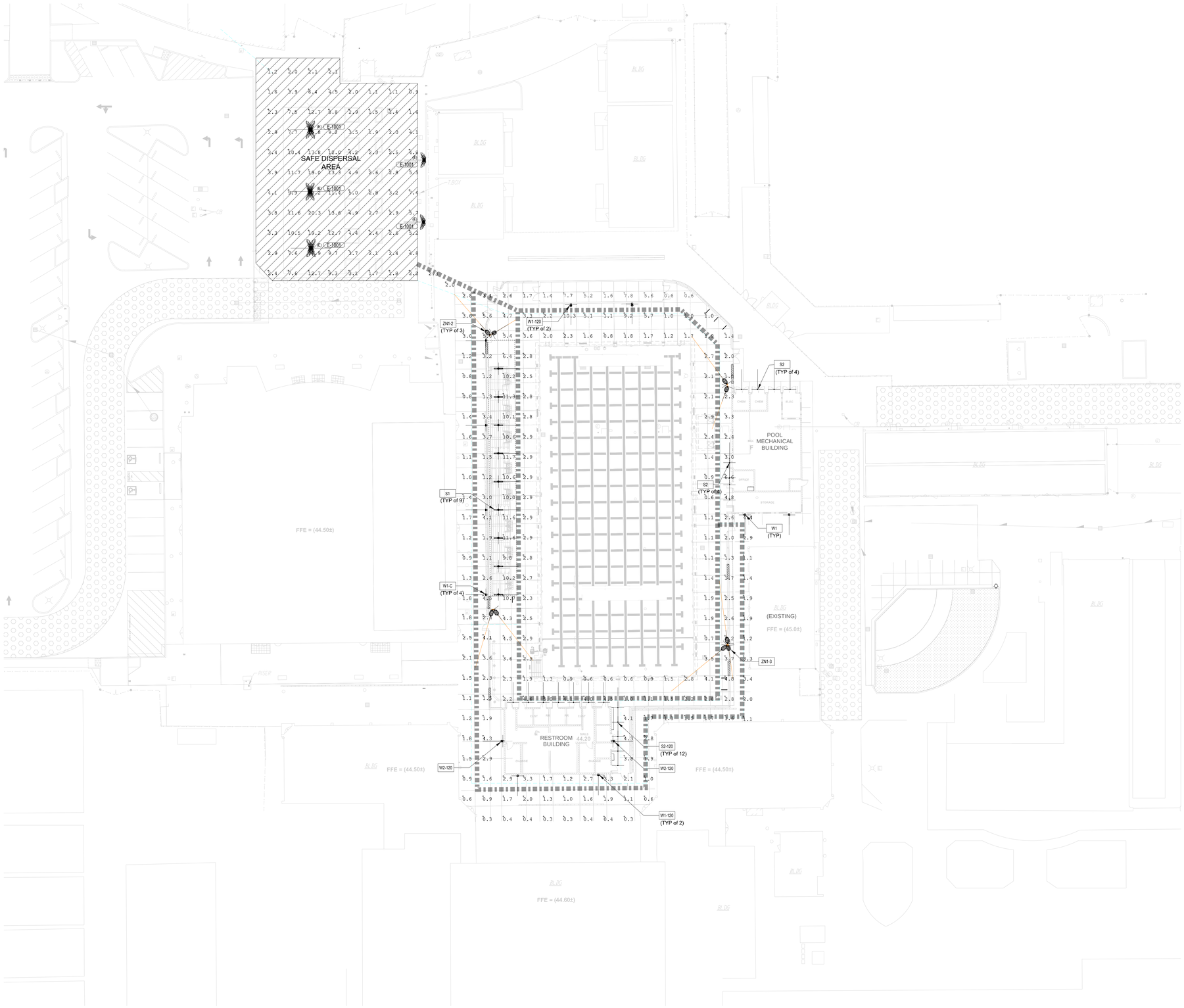

KEYNOTES

E-1001 EXISTING SITE FIXTURE TO REMAIN. FIXTURES TO CONTRIBUTE TO EMERGENCY EGRESS LAYOUT.

IDENTIFICATION STAMP
DIV. OF THE STATE ARCHITECT
APP: 02-119490 INC:
REVIEWED FOR
SS ☑ FLS ☑ ACS ☑
DATE: 09/13/2022

ARCHITECTURE ENGINEERING INTERIORS
LANDSCAPE ARCHITECTURE PLANNING

916-287-2400 Office

916-287-2401 Fax

LPADesignStudios.com

431 I Street,
Suite 107
Sacramento, California 95814

REGISTERED PROFESSIONAL ENGINEER
STEPHEN BARR
E-17415
9/30/23
ELECTRICAL
STATE OF CALIFORNIA

This document and all other project documents, ideas, aesthetics and designs incorporated therein are instruments of service. All project documents are copyright protected, are the property of LPA, Inc. (LPA) and cannot be lawfully used in whole or in part for any project or purpose except as set forth in the contractual agreement between LPA and its Client. The unauthorized disclosure and/or use of the project documents (including the creation of derivative works), may give rise to liability for copyright infringement, unlawful disclosure, use or misappropriation of property rights held by LPA. The unauthorized use of the project documents will give rise to the recovery of monetary losses and damages including attorney fees and costs for which the unauthorized user will be held liable.
Project documents describe the design intent of the work and are not a representation of as-built or existing conditions. LPA is not responsible for any discrepancies between the project documents and the existing conditions.

© LPA, Inc.

DAVIS SR HIGH SCHOOL
AQUATICS CENTER
315 W 14TH ST., DAVIS, CA 95616

Developed for
DAVIS JOINT UNIFIED SCHOOL DISTRICT

Revision	Date

Submittal	Date
50% DD REVIEW	06/15/2021
100% DD SUBMITTAL	07/26/2021
50% CD REVIEW	10/08/2021
100% CD DSA SUBMITTAL	10/22/2021
DSA SUBMITTAL	03/24/2022

Job Number	1904413
Date Published	03/24/2022
Checked By	Checker
Scale	AS SHOWN

ELECTRICAL SITE PHOTOMETRIC PLAN

E9.11

ELECTRICAL SITE PHOTOMETRIC PLAN | 1" = 20'-0" | 05

IDENTIFICATION STAMP
DIV. OF THE STATE ARCHITECT
APP: 02-119490 INC:
REVIEWED FOR
SS ☑ FLS ☑ ACS ☑
DATE: 09/13/2022

FIRE ALARM PLAN REQUIREMENTS

1. ALL WALL-MOUNTED VISUAL SIGNALING APPLIANCES AND COMBINATION AUDIBLE/VISUAL SIGNALING APPLIANCES SHALL BE MOUNTED SUCH THAT THE ENTIRE LENS IS NOT LESS THEN 80 INCHES AND NO GREATER THEN 96 INCHES ABOVE THE FINISHED FLOOR. ALL WALL MOUNTED AUDIBLE SIGNALING APPLIANCES SHALL HAVE THEIR TOPS ABOVE FINISHED FLOOR AT HEIGHTS NOT LESS THEN 90 INCHES AND BELOW FINISHED CEILING ON NOT LESS THEN 6 INCHES (WHICHEVER IS LOWER).
2. ALL EQUIPMENT SHALL BE U.L. AND C.S.F.M. LISTED.
3. ALL WIRING SHALL BE IN ACCORDANCE WITH THE C.E.C. AND AUTHORITIES HAVING JURISDICTION.
4. ALL JUNCTION BOXES AND CONDUITS SHALL BE SIZED IN ACCORDANCE WITH THE C.E.C. AND SHALL HAVE THEIR COVERS PAINTED RED WHERE APPLICABLE.
5. ELECTRICAL CONTRACTOR SHALL FURNISH ACCESS PANELS TO AREAS THAT REQUIRE SERVICING, TROUBLE SHOOTING, ETC.
6. DO NOT DEVIATE FROM CONDUIT RUNS AS SHOWN ON FLOOR PLANS WITHOUT PRIOR APPROVAL FROM ELECTRICAL ENGINEER. FACTORS SUCH AS EXCESSIVE VOLTAGE DROP, ADDITIONAL PARTS, ENGINEERING, ETC., THAT ARE A RESULT OF CONDUIT RUN DEVIATIONS SHALL BE THE SOLE RESPONSIBILITY OF THE ELECTRICAL CONTRACTOR.
7. DETECTORS SHALL NOT BE LOCATED IN A DIRECT AIR-FLOW, NOR CLOSER THEN 3 FEET (915mm) FROM AN AIR SUPPLY DIFFUSER.
8. ALL FAN SHUTDOWN FUNCTIONS, DAMPER CLOSURES AND ASSOCIATED MECHANICAL SYSTEM FIRE ALARM INTERFACE SHALL BE BY MECHANICAL CONTRACTOR, AND SHALL BE COORDINATED WITH FIRE ALARM SYSTEM.
9. ALL DUCT SMOKE DETECTORS SHALL BE MOUNTED BY THE MECHANICAL CONTRACTOR. DUCT SMOKE DETECTORS EXPOSED TO THE WEATHER SHALL BE C.S.F.M. LISTED FOR OUTDOOR INSTALLATION, AND WEATHER PROTECTED BY THE MECHANICAL CONTRACTOR. ALL AIR VELOCITY TESTING SHALL BE PERFORMED BY THE MECHANICAL CONTRACTOR.
10. ALL 120VAC POWER REQUIREMENTS FOR THE FIRE ALARM SYSTEM SHALL BE FURNISHED BY THE ELECTRICAL CONTRACTOR AND SHALL MEET ALL REQUIREMENTS OF THE AUTHORITIES HAVING JURISDICTION.
11. ALL FIRE ALARM DEVICE BACKBOXES, FIRE ALARM TERMINAL CABINETS, GUTTERS, JUNCTION BOXES, AND ASSOCIATED CONDUITS SHALL BE FURNISHED AND INSTALLED BY ELECTRICAL CONTRACTOR UNLESS OTHERWISE NOTED. REFER TO FIRE ALARM SYMBOL LIST AND/OR MOUNTING DETAILS FOR ADDITIONAL INFORMATION. SYSTEM SUPPLIER PROVIDED BACKBOXES SHALL BE INSTALLED BY ELECTRICAL CONTRACTOR UNLESS OTHERWISE NOTED. FIRE ALARM PANEL, REMOTES AND COMPONENTS SHALL BE SECURED TO MOUNTING SURFACES PER MANUFACTURER'S SPECIFICATIONS. NO SINGLE DEVICE SHALL EXCEED THE WEIGHT OF 20 LBS. WITHOUT SPECIAL MOUNTING DETAILS.
12. SMOKE DETECTOR TESTING SHALL BE CONDUCTED IN ACCORDANCE WITH NFPA 72, ALL APPLICABLE CODES AND THE MANUFACTURER'S INSTRUCTIONS.
13. ALL WIRING, INITIATING DEVICES AND ANNUNCIATOR PANEL SHALL BE SUPERVISED TO THE PRINCIPAL POINT OF ANNUNCIATION. THE FIRE ALARM CONTROL PANEL TO SUPERVISE THE ANNUNCIATOR PANEL, ALL INITIATING AND INDICATING DEVICE CIRCUITS.
14. ALL WIRING SHALL BE CUT FOR IN AND OUT. WIRING SHALL NOT BE LOOPED THROUGH DEVICES PER CEC STANDARDS, ALL WIRING IS TO BE PULLED THROUGH EACH JUNCTION BOX AND CONNECTED DIRECTLY TO EACH FIRE DEVICE. DO NOT SPLICE THE WIRE. THERE MUST BE AT LEAST 6' OF LEAD WIRE FROM THE BOX TO THE DEVICE.
15. POINT AND COMMON ANNUNCIATION IS PROHIBITED. SLC MAY BE T-TAPED ONLY AT BUILDING FATC IF NECESSARY. INSTALL SLC LOOPED WITHIN ALL BUILDINGS AS SHOWN ON THE FLOOR PLANS.
16. PROVIDE 3/4" CONDUIT FROM FIRE ALARM CONTROL PANEL TO TELEPHONE BACKBOARD FOR OWNER PROVIDED CENTRAL STATION MONITORING.
17. CONTRACTOR TO FIELD VERIFY AND PROVIDE DECIBEL METER FOR TESTING OF AMBIENT NOISE LEVELS (MINIMUM 15db ABOVE AVERAGE AMBIENT NOISE LEVEL BUT NOT LESS 75 DBA AT 10 FEET OR MORE THAN 110 DBA AT THE MINIMUM HEARING DISTANCE - SEE NFPA 72 APPENDIX A.7.4.2.1.) INSTALL ADDITIONAL AUDIBLE DEVICES AS NEEDED TO ATTAIN REQUIRED NOISE LEVELS IN ALL REQUIRED AREAS. PROVIDE UPDATED PLANS AND CALCULATIONS THROUGH THE "CHANGE ORDER" PROCESS WHEN INSTALLING ADDITIONAL DEVICES. INSPECTOR OF RECORD (IOR) TO WITNESS FINAL TEST OF SYSTEM. CONTRACTOR(S) TO PROVIDE FINAL TEST RESULT AND "RECORD OF COMPLETION" TO ARCHITECT OF RECORD, OWNER, DIVISION OF THE STATE ARCHITECT, IOR AND LOCAL FIRE AUTHORITY.
18. ALL CONDUITS ARE 3/4" U.O.N. ALL FIRE ALARM CIRCUITS SHALL BE IN CONDUIT, SURFACE RACEWAY OR OPEN RUN ABOVE CEILINGS, UNDER FLOORS AND IN WALLS IN A NEAT AND PROTECTED MANOR AS INDICATED ON DESIGN DOCUMENTS. EXPOSED CIRCUITS ARE ONLY PERMITTED WHEN NOTED AS EXPOSED ON DESIGN DOCUMENTS.
19. ALL FLOW SWITCHES SHALL BE 2 WIRE WITH NON-ELECTRONIC RETARD TYPE SIMILAR TO THE SYSTEM SENSOR MODEL "WFD SERIES" ONLY.
20. ALL DEVICES IN THE ALARM SYSTEM SHALL BE COMPATIBLE AND INSTALLED PER MANUFACTURER'S SPECIFICATIONS.
21. SYSTEM SHALL BE FURNISHED AND INSTALLED BY A MANUFACTURER'S AFFILIATE AND AUTHORIZED DISTRIBUTOR. FIRE ALARM SYSTEM INSTALLATION COMPANY SHALL BE UL LISTED (UUJS). INSTALLING CONTRACTOR SHALL PROVIDE SYSTEM PROGRAMMING FOR SUPERVISORY MONITORING PER CBC SECTION 901.6.2. SUPERVISORY MONITORING SHALL BE TESTED AND VERIFIED AS SENDING CORRECT SIGNALS IN CONJUNCTION WITH FINAL ACCEPTANCE TEST. OWNER SHALL BE RESPONSIBLE FOR ESTABLISHING A FIRE SYSTEM MONITORING CONTRACT OR PROVISIONS.
22. DETECTORS SHALL NOT BE INSTALLED UNTIL AFTER THE CONSTRUCTION CLEAN-UP OF ALL TRADES IS COMPETE AND FINAL. DETECTORS THAT HAVE BEEN INSTALLED PRIOR TO FINAL CLEAN-UP BY ALL TRADES SHALL BE CLEANED OR REPLACED IN ACCORDANCE WITH CHAPTER 7. CLEANING OR REPLACEMENT OF DEVICES THAT WERE MOUNTED AT THE REQUEST OF THE CONTRACTOR WILL NOT BE PERFORMED WITHOUT WRITTEN AUTHORIZATION THAT ASSUMES FINANCIAL RESPONSIBILITY FOR COSTS INCURRED. SEE THE LATEST VERSION OF NFPA 72.
23. PER CBC 2019, SECTION 11B-3094, CONTROLS AND OPERATING MECHANISMS AT INITIATING DEVICE "SHALL BE OPERABLE WITH ONE HAND AND SHALL NOT REQUIRE TIGHT GRASPING, PINCHING, OR TWISTING OF THE WRIST. THE FORCE REQUIRED TO ACTIVATE CONTROLS SHALL BE NO GREATER THAN 5lbf (22.2N). OPERABLE PARTS SHALL BE PLACED WITHIN THE REACH RANGES SPECIFIED IN SECTION 11B-308".
24. FIRE ALARM SYSTEM SHALL HAVE A MEANS FOR TURNING OFF ACTIVATED ALARM NOTIFICATION APPLIANCES, WHEN OCCUPANT NOTIFICATION ALARM SIGNAL DEACTIVATION IS ACTIVATED, BOTH AUDIBLE AND VISIBLE NOTIFICATION APPLIANCES SHALL BE SIMULTANEOUSLY DEACTIVATED. THE DECTIVATION MEANS SHALL BE KEY-OPERATED.
25. THE SYSTEM SHALL CONFORM TO CALIFORNIA CODE OF REGULATIONS (CCR) TITLES 19 AND 24 AS APPLICABLE TO THIS PROJECT.
26. SPEAKER COVERAGE SHALL COMPLY WITH 2016 NFPA 72 AND 2019 CBC. PROVIDE 2W SPEAKER COVERAGE IN EXTERIOR & CLASSROOMS AND 1/4W IN SMALL SPACES (OFFICES, RESTROOMS AND STORAGE/SUPPORT).
27. ALL FIRE ALARM SYSTEM VISUAL SIGNAL BE SYNCHRONIZED THROUGHOUT THE SITE.
28. WHERE SPEAKER/STROBE OCCUR AT WHITEBOARDS, LOCATE DEVICE(S) +4" ABOVE TOP OF WHITEBOARD, NOT TO EXCEED 96" TO TOP OF LENS.
29. PROVIDE A LABEL WITHIN THE FACP AND EACH POWER SUPPLY WITH THE PANEL NUMBER AND CIRCUIT NUMBER OF THE 120 VOLT POWER SOURCE.
30. WHERE A DETECTOR IS INSTALLED ABOVE THE CEILING, THE DETECTOR SHALL BE EASILY ACCESSIBLE AND THE LOCATION OF THE DETECTOR SHALL BE CLEARLY MARKED. FOR DUCT SMOKE DETECTORS A REMOTE TEST STATION SHALL BE PROVIDED.
31. TEMPERATURE SETTINGS OF HEAT DETECTOR DEVICES ARE TO BE SET AT A MINIMUM OF 20°F. ABOVE THE MAXIMUM EXPECTED TEMPERATURE OF THE SPACE INSTALLED PER NFPA 72, 2-23.
32. MECHANICAL UNIT (HVAC) SHUT DOWN SHALL UTILIZE FULLY AUTOMATIC FIRE ALARM SYSTEM AREA SMOKE COVERAGE TO TRIGGER RELAY FOR HVAC UNIT SHUT DOWN (PER CMC 608).
33. UPON COMPLETION OF SYSTEM INSTALLATION, THE SYSTEM SHALL BE TESTED IN THE PRESENCE OF AND IN A MANNER ACCEPTABLE TO DSA/I.O.R. CONTRACTOR SHALL SUPPLY NECESSARY TESTING EQUIPMENT, INCLUDING A "SOUND LEVEL METER" TO CHECK ACCEPTABLE NOISE LEVELS OF AUDIBLE DEVICES. PROVIDE TEST RESULTS PER NFPA 72 TO ARCHITECT, D.S.A., I.O.R. AND TO LOCAL FIRE AUTHORITY. THE INSTALLING CONTRACTOR SHALL PROVIDE A RECORD OF COMPLETION PER NFPA72, FIGURE 7.8.2(a) THRU. 7.8.2(f).
34. THE "END OF LINE RESISTANCE" OF EACH CIRCUIT SHALL BE TESTED IN THE PRESENCE OF THE I.O.R. AND SHALL NOT EXCEED A MAXIMUM OF 10% VOLTAGE DROP, OR LISTED MANUFACTURER'S MINIMUM OPERATING VOLTAGE.
35. REFER TO INSTALLATION INSTRUCTION SHEETS FOR EXTERIOR SPEAKER MOUNTING.
36. ALL WIRING USED IN UNDERGROUND CONDUIT SHALL BE LISTED FOR WET AREA APPLICATION, IN ACCORDANCE WITH CEC 760.
37. ALL UNDERGROUND FIRE ALARM SYSTEM CONDUCTORS SHALL BE CONTINUOUS FROM END TO END. NO UNDERGROUND SPLICES WILL BE PERMITTED, NOR ACCEPTABLE.
38. FIRE ALARM SYSTEM IS FULLY AUTOMATIC SYSTEM.
39. APPLICABLE STANDARD 2016 NFPA 72.
40. INSTALLATION OF THE SYSTEM SHALL NOT BE STARTED UNTIL DETAILED DESIGN DOCUMENTS AND SPECIFICATION, INCLUDING STATE FIRE MARSHAL LISTING NUMBERS FOR EACH COMPONENT OF THE SYSTEM HAS BEEN APPROVED BY DSA.
41. A STAMPED SET OF APPROVED FIRE ALARM DESIGN DOCUMENTS SHALL BE ON THE JOB SITE AND USED FOR INSTALLATION.
42. ANY DISCREPANCIES BETWEEN THE DRAWINGS AND THE CODE OR RECOGNIZED STANDARDS SHALL BE BROUGHT TO THE ATTENTION OF DSA AND THE ARCHITECT/ENGINEER OF THE PROJECT.
43. DSA, ARCHITECT/ENGINEER AND OWNER SHALL BE NOTIFIED A MINIMUM OF 48 HOURS PRIOR TO THE FINAL INSPECTION AND/OR TESTING.
44. ALL PENETRATIONS THROUGH RATED ASSEMBLIES, REQUIRING OPENING PROTECTION SHALL BE PROVIDED WITH A PENETRATION FIRE STOP SYSTEM AS IDENTIFIED IN CBC CHAPTER 7, UL OR OTHER LAB TESTING CRITERIA. APPROVED TYPE OF MATERIALS SHALL BE IDENTIFIED WITHIN THE SPECIFICATION WITHIN THE FIRE ALARM SECTION.
45. PROVIDE COMPLETE VOICE EVACUATION SYSTEM. PROVIDE ALL COMPONENTS, DEVICES AND PANELS FOR A COMPLETE SYSTEM.
46. THE CONTRACTOR SHALL ADJUST/INSTALL ALL DEVICES TO MAXIMIZE PERFORMANCE AND TO MINIMIZE FALSE ALARMS.
47. VISUAL DEVICES SHOULD NOT EXCEED 2 FLASHES PER SECOND AND SHOULD NOT BE SLOWER THAN 1 FLASH EVERY SECOND. THE DEVICE SHALL HAVE A PULSING LIGHT SOURCE NOT LESS THAN 15 CANDELLA. VISUAL DEVICES WITHIN 55' FROM EACH OTHER SHALL BE SYNCHRONIZED.
48. UNDERGROUND AND EXTERIOR CONDUITS TO HAVE WATERTIGHT FITTINGS AND WIRE TO BE APPROVED FOR WET LOCATIONS.
49. ALL FIRE ALARM WIRING SHALL BE FLP OR FPLP (FIRE POWER LIMITED OR FIRE POWER LIMITED PLENUM) AS REQUIRED FOR APPLICATION. WIRING IN CONDUIT ABOVE GROUND MAY BE THHN OR THWN.
50. ALL LED REMOTE INDICATORS FOR DUCT DETECTORS AND FIRE/SMOKE DAMPERS REQUIRED BY THE LOCAL AHJ SHALL BE LOCATED IN CEILINGS IN COORDINATION WITH ARCHITECT PRIOR TO ANY ROUGH-IN.

PARTIAL LIST OF APPLICABLE CODES AS OF January 1, 2020*

2019 California Administrative Code (CAC), Part 1, Title 24 CCR*
2019 California Building Code (CBC), Part 2, Title 24 CCR
(2018 International Building Code, Vol. 1 & 2, and 2019 California amendments)
2019 California Electrical Code (CEC), Part 3, Title 24 CCR
(2017 National Electrical Code and 2019 California Amendments)
2019 California Mechanical Code (CMC), Part 4, Title 24 CCR
(2018 IAPMO Uniform Mechanical Code and 2019 California amendments)
2019 California Plumbing Code (CPC), Part 5, Title 24 CCR
(2018 IAPMO Uniform Plumbing Code and 2019 California amendments)
2019 California Energy Code (CEC), Part 6, Title 24 CCR
2019 California Fire Code (CFC), Part 9, Title 24 CCR
(2018 International Fire Code and 2019 California Amendments)
2019 California Existing Building Code (CEBC), Part 10, Title 24 CCR
(2018 International Existing Building Code and 2019 California Amendments)
2019 California Green Building Standards Code (CALGreen), Part 11, Title 24 CCR
2019 California Referenced Standards Code, Part 12, Title 24 CCR
Title 19 CCR, Public Safety, State Fire Marshal Regulations
2016 ASME A17.1/CSA B44-13 Safety Code for Elevators and Escalators *(per 2019 CBC Part 2 Ch 35)*
Note: Cal/OSHA Elevator Unit enforces CCR Title 8 and uses the 2004 ASME A17.1 by adoption

PARTIAL LIST OF APPLICABLE STANDARDS

NFPA 13 - Standard for the Installation of Sprinkler Systems (CA amended).....2016 Edition
NFPA 14 - Standard for the Installation of Standpipe and Hose Systems (CA amended)....2016 Edition
NFPA 17 - Standard for Dry Chemical Extinguishing Systems.....2017 Edition
NFPA 17A - Standard for Wet Chemical Extinguishing Systems.....2017 Edition
NFPA 20 - Standard for the Installation of Stationary Pumps for Fire Protection.....2016 Edition
NFPA 22 - Standard for Water Tanks for Private Fire Protection.....2018 Edition
NFPA 24 - Standard for the Installation of Private Fire Service Mains and
Their Appurtenances (CA amended).....2016 Edition
NFPA 72 - National Fire Alarm and Signaling Code (CA amended).....2016 Edition
NFPA 80 - Standard for Fire Doors and Other Opening Protectives.....2016 Edition
NFPA 2001 - Standard on Clean Agent Fire Extinguishing Systems (CA amended).....2015 Edition
UL 300 - Standard for Fire Testing of Fire Extinguishing Systems for
Protection of Commercial Cooking Equipment.....2005 (R2010)
UL 464 - Audible Signaling Devices for Fire Alarm and Signaling Systems,
Including Accessories.....2003 Edition
UL 521 - Standard for Heat Detectors for Fire Protective Signaling Systems.....1999 Edition
UL 1971 - Standard for Signaling Devices for the Hearing Impaired.....2002 (R2010)
ICC 300 - Standard for Bleachers, Folding and Telescopic Seating, and Grandstands.....2017 Edition

For a complete list of applicable NFPA standards refer to 2019 CBC (SFM) Chapter 35 and California Fire Code Chapter 80.

See California Building Code Chapter 35 for State of California amendments to the NFPA Standards.

*All parts of the 2019 California Building Code become effective January 1, 2020 except the effective date for the use of the 2019 Building Energy Efficiency Standards (Title 24, Part 1, Chapter 10) is January 8, 2019 and the effective date for the use of the California Administrative Code (Title 24, Part 1, Chapter 4) is January 8, 2019.

MEP SYSTEMS COMPONENT ANCHORAGE AND BRACING NOTES

1. ALL MECHANICAL, PLUMBING, AND ELECTRICAL COMPONENTS SHALL BE ANCHORED AND INSTALLED PER THE DETAILS ON THE DSA APPROVED CONSTRUCTION DOCUMENTS. THE FOLLOWING COMPONENTS SHALL BE ANCHORED OR BRACED TO MEET THE FORCE AND DISPLACEMENT REQUIREMENTS PRESCRIBED IN THE 2019 CBC, SECTIONS 1617A.1.18 THROUGH 1617A.1.26 AND ASCE 7-16 CHAPTERS 13, 26 AND 30:
   1. ALL PERMANENT EQUIPMENT AND COMPONENTS.
   2. TEMPORARY, MOVEABLE OR MOBILE EQUIPMENT THAT IS PERMANENTLY ATTACHED (e.g. HARD WIRED) TO THE BUILDING UTILITY SERVICES SUCH AS ELECTRICITY, GAS OR WATER. "PERMANENTLY ATTACHED" SHALL INCLUDE ALL ELECTRICAL CONNECTIONS EXCEPT PLUGS FOR 110/220 VOLT RECEPTACLES HAVING A FLEXIBLE CABLE.
   3. TEMPORARY, MOVABLE OR MOBILE EQUIPMENT WHICH IS HEAVIER THAN 400 POUNDS OR HAS A CENTER OF MASS LOCATED 4 FEET OR MORE ABOVE THE ADJACENT FLOOR OR ROOF LEVEL THAT DIRECTLY SUPPORT THE COMPONENT IS REQUIRED TO BE RESTRAINED IN A MANNER APPROVED BY DSA.
2. THE FOLLOWING MECHANICAL AND ELECTRICAL COMPONENTS SHALL BE POSITIVELY ATTACHED TO THE STRUCTURE, BUT NEED NOT DEMONSTRATE DESIGN COMPLIANCE WITH THE REFERENCES NOTED ABOVE. THESE COMPONENTS SHALL HAVE FLEXIBLE CONNECTIONS PROVIDED BETWEEN THE COMPONENT AND ASSOCIATED DUCTWORK, PIPING, AND CONDUIT. FLEXIBLE CONNECTIONS MUST ALLOW MOVEMENT IN BOTH TRANSVERSE AND LONGITUDINAL DIRECTIONS:
   A. COMPONENTS WEIGHING LESS THAN 400 POUNDS AND HAVE A CENTER MASS LOCATED 4 FEET OR LESS ABOVE THE ADJACENT FLOOR OR ROOF LEVEL THAT DIRECTLY SUPPORT THE COMPONENT.
   B. COMPONENTS WEIGHING LESS THAN 20 POUNDS, OR IN THE CASE OF DISTRIBUTED SYSTEMS, LESS THAN 5 POUNDS PER FOOT, WHICH ARE SUSPENDED FROM A ROOF OR FLOOR OR HUNG FROM A WALL.
3. THE ANCHORAGE OF ALL MECHANICAL, ELECTRICAL AND PLUMBING COMPONENTS SHALL BE SUBJECT TO THE APPROVAL OF THE DESIGN PROFESSIONAL IN GENERAL RESPONSIBLE CHARGE OR STRUCTURAL ENGINEER DELEGATED RESPONSIBILITY AND ACCEPTANCE BY DSA. THE PROJECT INSPECTOR WILL VERIFY THAT ALL COMPONENTS AND EQUIPMENT HAVE BEEN ANCHORED IN ACCORDANCE WITH ABOVE REQUIREMENTS.

PIPING DUCTWORK AND ELECTRICAL DISTRIBUTION SYSTEM BRACING NOTE

PIPING, DUCTWORK, AND ELECTRICAL DISTRIBUTION SYSTEMS SHALL BE BRACED TO COMPLY WITH THE FORCES AND DISPLACEMENTS PRESCRIBED IN ASCE 7-16 SECTION 13.3 AS DEFINED IN ASCE 7-16 SECTIONS 13.6.5, 13.6.6, 13.6.7, 13.6.8; AND 2019 CBC, SECTIONS 1617A.1.24, 1617A.1.25 AND 1617A.1.26.

THE METHOD OF SHOWING BRACING AND ATTACHMENTS TO THE STRUCTURE FOR THE IDENTIFIED DISTRIBUTION SYSTEM ARE AS NOTED BELOW. WHEN BRACING AND ATTACHMENTS ARE BASED ON A PREAPPROVED INSTALLATION GUIDE (e.g. OSHPD OPM FOR 2013 CBC OR LATER), COPIES OF THE BRACING SYSTEM INSTALLATION GUIDE OR MANUAL SHALL BE AVAILABLE ON THE JOBSITE PRIOR TO THE START OF AND DURING THE HANGING AND BRACING OF THE DISTRIBUTION SYSTEMS. THE STRUCTURAL ENGINEER OF RECORD SHALL VERIFY THE ADEQUACY OF THE STRUCTURE TO SUPPORT THE HANGER AND BRACE LOADS.

MECHANICAL PIPING (MP), MECHANICAL DUCTS (MD), PLUMBING PIPING (PP),
ELECTRICAL DISTRIBUTION SYSTEMS (E):

MP	MD	PP	E	
☐	☐	☐	☐	OPTION 1: DETAILED ON THE APPROVED DRAWINGS WITH PROJECT SPECIFIC NOTES AND DETAILS.
☐	☐	☐	■	OPTION 2: SHALL COMPLY WITH THE APPLICABLE PRE-APPROVAL (OPM#): MASON WEST 0043-13 OR MW SAUSSE 0203-13

SYMBOL LEGEND

SYMBOL	MODEL	MFGR	DESCRIPTION	C.S.F.M. #
FACP	E3 SERIES	GAMEWELL-FCI	FIRE ALARM CONTROL PANEL W/EMERGENCY VOICE SYSTEM	7165-1703:0125
FAPS	GFPS-6	GAMEWELL-FCI	FIRE ALARM POWER SUPPLY PANEL	7300-1703:0167
ANN	E3-LOC	GAMEWELL-FCI	REMOTE NETWORK ANNUNCIATOR W/MICROPHONE	7165-1703:0125
FADC	ACE-11	SPACE AGE	FIRE ALARM DOCUMENT CABINET	7300-0553:0110
	XP95-P	GAMEWELL-FCI	PHOTOELECTRIC SMOKE DETECTOR	7272-1703:0155
	XP95-B4	GAMEWELL-FCI	DETETCTOR BASE	7300-1394:0114
	RCE-95	GAMEWELL-FCI	ADDRESSABLE RELAY MODULE	7300-1703:0135
	PID-95P	GAMEWELL-FCI	ADDRESABLE MONITOR MODULE	7300-1703:0135
WP	302-AW-194	THERMOTECH	WP HEAT DETECTOR, 194° F	7270-0021:0001
	PID-95	GAMEWELL-FCI	ADDRESSABLE MONITOR MODULE	7300-1703:0135
	5602	SYSTEM SENSOR	HEAT DETECTOR, 194° F (ABOVE ACCESSIBLE CEILING U.N.O.)	7270-1653:0167
	PID-95	GAMEWELL-FCI	ADDRESSABLE MONITOR MODULE	7300-1703:0135
	SPSCWL	SYSTEM SENSOR	CEILING MOUNT SPEAKER/STROBE	7320-1653:0505
	SPSWL	SYSTEM SENSOR	WALL MOUNT SPEAKER/STROBE	7320-1653:0505
WP	STH-15SR	WHEELOCK-EATON	WALL MOUNT SPEAKER (EXTERIOR)	7320-0785:0144
W	--	--	WATERFLOW (BY FIRE SPRINKLER CONSULTANT)	---
	PID-95	GAMEWELL-FCI	ADDRESSABLE MONITOR MODULE	7300-1703:0135
T	--	--	TAMPER SWITCH (BY FIRE SPRINKLER CONSULTANT)	---
	PID-95	GAMEWELL-FCI	ADDRESSABLE MONITOR MODULE	7300-1703:0135
	MS-95L	GAMEWELL-FCI	ADDRESSABLE MANUAL PULL STATION	7150-1703:0136
B	--	--	120VAC BELL (BY FIRE SPRINKLER CONSULTANT)	---

CONDUCTOR DESIGNATION	WIRE IN CONDUIT	CONDUCTOR DESIGNATION	WIRE IN CONDUIT UNDERGROUND / WET LOCATION	CIRCUIT TYPE
Z	2 #16 UNSHIELDED (WEST PENN #D990)	ZU	2 #16 FPL UNSHIELDED (WEST PENN #AQ-225)	INITIATING CIRCUIT
N	2 #12 THHN STRANDED	NU	2 #12 THWN STRANDED	STROBE CIRCUIT
P	2 #12 THHN STRANDED	PU	2 #12 THWN STRANDED	POWER CIRCUIT
C	2 #12 THHN STRANDED	CU	2 #12 THWN STRANDED	NETWORK CONTROL
S	2 #16 SHIELDED (WEST PENN #D991)	SU	2 #16 FPL SHIELDED (WEST PENN #AQ-291	SPEAKER CIRCUIT

EXAMPLE:
2C — NUMBER OF CONDUCTOR PAIRS
C — CONDUCTOR DESIGNATION
ABOVE EXAMPLE "2N" MEANS "2 PAIRS OF #12 WIRE"

NOTE:

1. ALL WIRE MODEL NUMBERS ARE WEST PENN. EQUIVALENT BY OTHER MANUFACTURER IS ACCEPTABLE.
2. COLOR CODE ALL FIRE ALARM CONDUCTORS PER DISTRICT STANDARDS. VERIFY COLOR SCHEMES PRIOR TO ORDERING FIRE ALARM CONDUCTORS.
3. ALL WIRING SHALL BE CLASS "B", U.O.N.
4. ALL WIRING SHALL BE IN MINIMUM 3/4" CONDUIT, U.O.N. CONTRACTOR SHALL BE RESPONSIBLE FOR ALL SLEEVES, LOCATION AND SIZE OF CONDUITS TO COMPLY WITH CODES AND STANDARDS.
5. UNDERGROUND CABLES SHALL BE LISTED AS UNDERGROUND BURIAL TYPE AND EXTERIOR CONDUITS SHALL HAVE WATERTIGHT FITTINGS.

FIRE ALARM SEQUENCE OF OPERATIONS

DEVICE \ ACTION	ACTIVATE NOTIFICATION ALARM SIGNALS	ACTIVATE REMOTE ANNUNCIATOR	ACTIVATE TROUBLE OR SUPERVISORY SIGNAL	SEND SIGNAL TO UL LISTED CENTRAL STATION	CLOSE CSFD	SHUT DOWN AH-UNIT
MANUAL PULL STATION	YES	YES	NO	YES	YES	YES
SMOKE DETECTOR	YES	YES	NO	YES	YES	YES
HEAT DETECTOR	YES	YES	NO	YES	YES	YES
A/C POWER FAILURE	NO	YES	YES	YES	NO	NO
WIRING FAULTS	NO	YES	YES	YES	NO	NO
LOW BATTERY	NO	YES	YES	YES	NO	NO
WATERFLOW	YES	YES	NO	YES	YES	YES
TAMPER	NO	YES	YES	YES	NO	NO

CENTRAL STATION INFORMATION

SIERRA BUILDING SYSTEMS, INC.
UL # TBD
6131 PACIFIC STREET
ROCKLIN, CA 95677
PHONE #: 1-866-216-9292
CUSTOMER ACCT #: 838-4763

FIRE ALARM SCOPE OF WORK

TO PROVIDE AND INSTALL A NEW ANALOG ADDRESSABLE, VOICE EVAC, AUTOMATIC, POWER LIMITED 24V DC SUPERVISED FIRE ALARM SYSTEM WITHIN THE AQUATICS CENTER AND TO NETWORK/INTERFACE THE EXISTING SCHOOL FIRE ALARM SYSTEM AS INDICATED ON PLANS.

COMPLETE FIRE ALARM SUBMITTAL

AUTOMATIC FIRE ALARM VOICE COMMUNICATION SYSTEM

LPA
ARCHITECTURE ENGINEERING INTERIORS
LANDSCAPE ARCHITECTURE PLANNING

916-287-2400 Office
916-287-2401 Fax
LPADesignStudios.com
431 I Street,
Suite 107
Sacramento, California 95814

REGISTERED PROFESSIONAL ENGINEER STEPHEN BANG E-17415 09/30/23 ELECTRICAL STATE OF CALIFORNIA

This document and all other project documents, ideas, aesthetics and designs incorporated therein are instruments of service. All project documents are copyright protected, are the property of LPA, Inc. (LPA) and cannot be lawfully used in whole or in part for any project or purpose except as set forth in the contractual agreement between LPA and its Client. The unauthorized disclosure and/or use of the project documents (including the creation of derivative works), may give rise to liability for copyright infringement, unlawful disclosure, use or misappropriation of property rights held by LPA. The unauthorized use of the project documents will give rise to the recovery of monetary losses and damages including attorney fees and costs for which the unauthorized user will be held liable.
Project documents describe the design intent of the work and are not a representation of as-built or existing conditions. LPA is not responsible for any discrepancies between the project documents and the existing conditions.

© LPA, Inc.

DAVIS SENIOR HIGH SCHOOL
NEW AQUATICS CENTER
315 W 14TH ST., DAVIS, CA 95616

Developed for
DAVIS JOINT UNIFIED SCHOOL DISTRICT

Revision	Date

Submittal	Date
50% DESIGN DEVELOPMENT	06/15/2021
100% DD SUBMITTAL	07/26/2021
50% CD REVIEW	10/08/2021
100% CD DSA SUBMITTAL	10/22/2021
DSA SUBMITTAL	03/24/2022

Job Number	1904413
Date Published	03/24/2022
Checked By	LPA
Scale	

FIRE ALARM LEAD SHEET

FA0.01

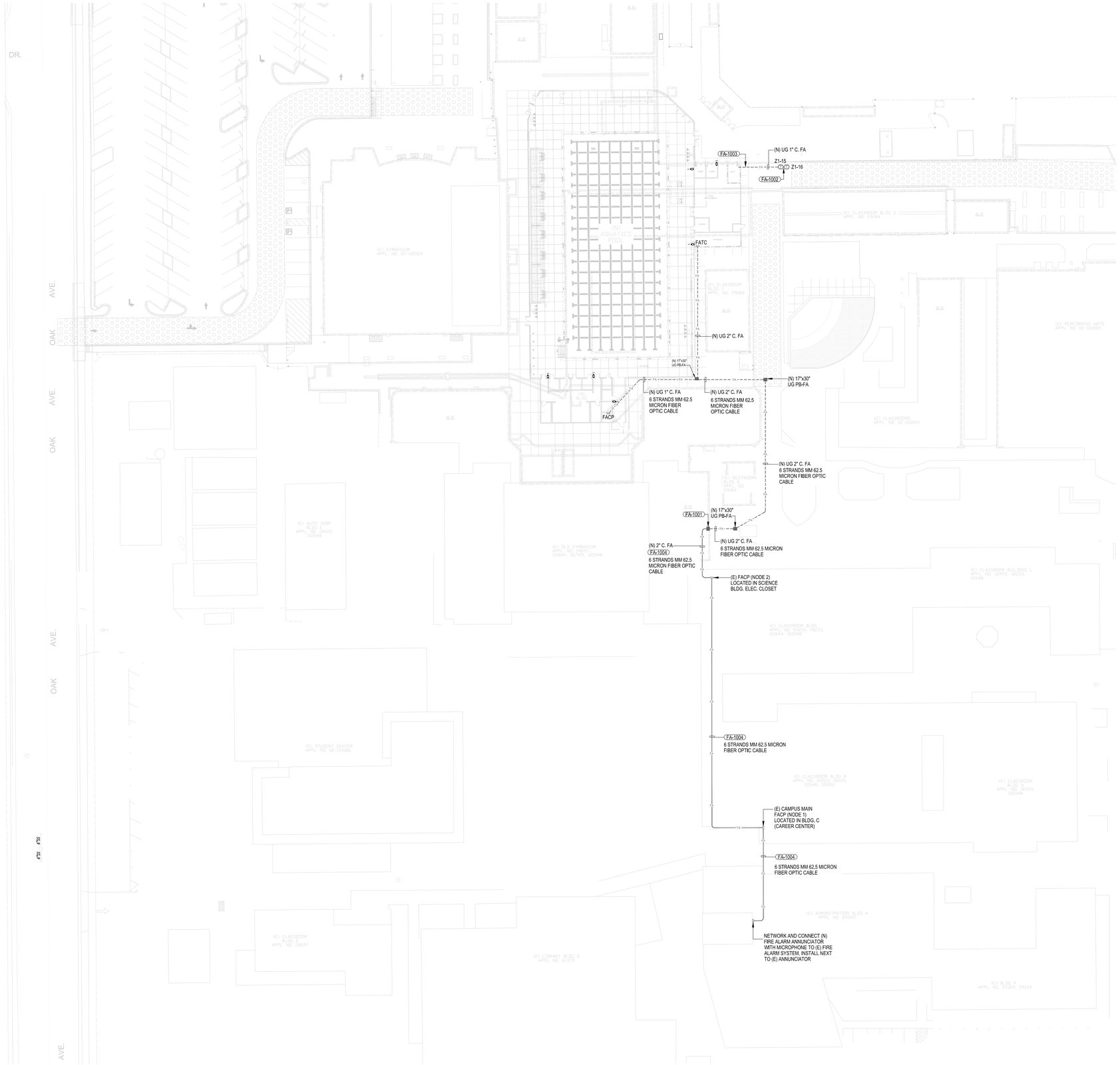

KEYNOTES

FA-1001 (N) ROOF MOUNTED NEMA-4 PULL BOX TO TRANSITION TO UNDERGROUND CONDUIT. SIZE AS REQUIRED.

FA-1002 STUB-UP (N) 1" CONDUIT TO CONTROL VALVE MONITOR MODULES, SEE CIVIL DRAWINGS FOR EXACT LOCATION. SEE SHEET C4.02 FOR MORE INFORMATION.

FA-1003 STUB-UP INSIDE ELECTRICAL ROOM, EXTEND FIRE WIRING TO SLC LOOP.

FA-1004 ROUTE (N) EXPOSED FIRE ALARM 2" CONDUIT OVER COVERED WALKWAY. SEE CONDUIT SUPPORT DETAIL 14/FA4.00.

REMODEL FIRE ALARM SITE PLAN | 1" = 30'-0" | 05

IDENTIFICATION STAMP
DIV. OF THE STATE ARCHITECT
APP: 02-119490 INC:
REVIEWED FOR
SS ☑ FLS ☑ ACS ☑
DATE: 09/13/2022

LPA
ARCHITECTURE ENGINEERING INTERIORS
LANDSCAPE ARCHITECTURE PLANNING

916-287-2400 Office
916-287-2401 Fax
LPADesignStudios.com
431 I Street,
Suite 107
Sacramento, California 95814

REGISTERED PROFESSIONAL ENGINEER
STEPHEN BAKER
E-17415
09/30/23
ELECTRICAL
STATE OF CALIFORNIA

This document and all other project documents, ideas, aesthetics and designs incorporated therein are instruments of service. All project documents are copyright protected, are the property of LPA, Inc. (LPA) and cannot be lawfully used in whole or in part for any project or purpose except as set forth in the contractual agreement between LPA and its Client. The unauthorized disclosure and/or use of the project documents (including the creation of derivative works), may give rise to liability for copyright infringement, unlawful disclosure, use or misappropriation of property rights held by LPA. The unauthorized use of the project documents will give rise to the recovery of monetary losses and damages including attorney fees and costs for which the unauthorized user will be held liable.
Project documents describe the design intent of the work and are not a representation of as-built or existing conditions. LPA is not responsible for any discrepancies between the project documents and the existing conditions.

© LPA, Inc.

DAVIS SENIOR HIGH SCHOOL
NEW AQUATICS CENTER
315 W 14TH ST., DAVIS, CA 95616

Developed for
DAVIS JOINT UNIFIED SCHOOL DISTRICT

Revision	Date

Submittal	Date
50% DESIGN DEVELOPMENT	06/15/2021
100% DD SUBMITTAL	07/26/2021
50% CD REVIEW	10/08/2021
100% CD DSA SUBMITTAL	10/22/2021
DSA SUBMITTAL	03/24/2022

Job Number	1904413
Date Published	03/24/2022
Checked By	LPA
Scale	

FIRE ALARM SITE PLAN

FA1.01

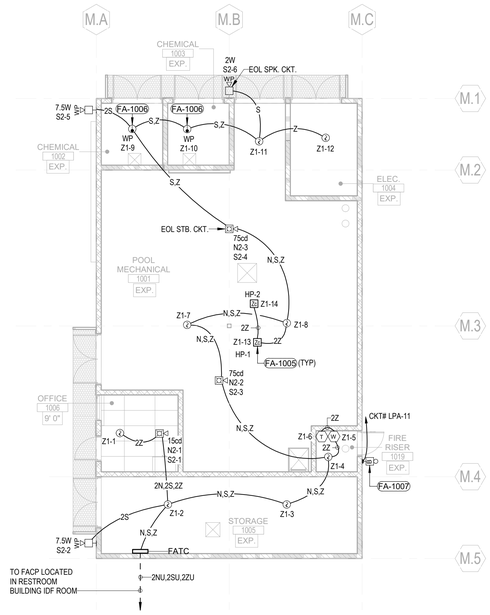

1 - FIRE ALARM - POOL MECHANICAL BUILDING RCP | 1/8" = 1'-0" | 06

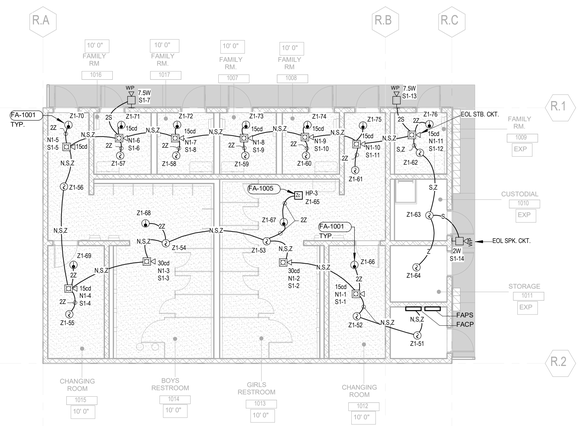

1 - FIRE ALARM - POOL RESTROOM BUILDING RCP | 1/8" = 1'-0" | 09

KEYNOTES

ITEM	DESCRIPTION
FA-1001	PROVIDE 24"X24" ACCESS PANEL, LISTED FOR THE INTENDED APPLICATION, TO ACCESS HEAT DETECTOR ABOVE CEILING WHEREVER OCCURS IN HARD LID CEILING AREAS.
FA-1005	PROVIDE FIRE ALARM RELAY MODULE WITH INTERPOSING RELAY FOR MECHANICAL EQUIPMENT AUTO SHUTDOWN (HVAC UNITS, FIRE SMOKE DAMPERS, FANS). VERIFY EXACT LOCATION AND QUANTITY ON MECHANICAL DRAWINGS.
FA-1006	MOUNT HEAT DETECTORS BELOW CEILING.
FA-1007	SPRINKLER BELL PROVIDED BY FIRE PROTECTION CONTRACTOR. PROVIDE 120VAC TO ENERGIZE SPRINKLER BELL. CONNECT BELL DIRECTLY TO WATER FLOW SWITCH. SEE FIRE ALARM RISER DIAGRAM SHEET FA5.00 FOR CIRCUIT INFORMATION.

LEGEND

- METAL STUD WALL CONSTRUCTION
- 1 HOUR RATED METAL STUD WALL CONSTRUCTION
- 1 HOUR RATED METAL STUD WALL CONSTRUCTION
- MASONRY WALL CONSTRUCTION

PLAN NOTES

1. DO NOT DEVIATE FROM CONDUIT RUNS AS SHOWN ON FLOOR PLANS WITHOUT PRIOR APROVAL FROM SYSTEM SUPPLIER/ENGINEER. FACTORS SUCH AS EXCESSIVE VOLTAGE DROP, ADDITIONAL PARTS, ENGINEERING, ETC. THAT ARE A RESULT OF CONDUIT RUN DEVIATIONS SHALL BE THE SOLE RESPONSIBILITY OF THE CONTRACTOR.
2. DETECTORS SHALL NOT BE LOCATED IN A DIRECT AIR-FLOW, NOT CLOSER THAN 3 FEE FROM ANY SUPPLY DIFFUSER.
3. FIRE ALARM EVACUATION SIGNAL SHALL BE CLEARLY HEARD AND COMPLY WITH 2016 NFPA 72 18.4.3.1.
4. REFER TO ARCHITECTURAL EXTERIOR ELEVATIONS FOR PRECISE OUTLET LOCATIONS.
5. REFER TO ARCHITECTURAL REFELECTED CEILING PLAN FOR EXACT LOCATION OF ALL CEILING MOUNTED DEVICES AND CEILING HEIGHTS.
6. IF SHIELDED WIRE IS USED, THE FOLLOWING MUST BE OBSERVED:
   A. METALLIC CONTINUITY OF THE SHIELD MUST BE MAINTAINED AND INSULATED THROUGHOUT THE ENTIRE LENGTH OF THE CABLE.
   B. THE ENTIRE LENGTH OF THE CABLE MUST HAVE A RESISTANCE GREATER THAN 1 MEGAOHM TO EARTH.
7. ALL PENETRATIONS THOUGH FIRE RATED WALL SHALL BE PROTECTED FROM THE SPREAD OF FIRE WITH AN APPROVED FIRE STOP SYSTEM EQUAL TO OR GREATER THAN THE FIRE RATING OF THE STRUCTURE/SURFACE BEING PENETRATED.
8. A SYSTEM GROUND MUST BE PROVIDED FOR EARTH DETECTION AND LIGHTNING PROTECTION DEVICES. THIS CONNECTION SHALL BE MADE TO AN APPROVED DEDICATED EATHER CONNECTION PER CEC ARTICLE 250.
9. WIRING IN DUCTS, PLENUMS, AND OTHER AIR HANDLING SPACES MUST BE INSTALLED IN ACCORDANCE WITH THE 2019 CEC.
10. UNDERGROUND WIRING MUST BE FREE OF ALL WATER.
11. ALL FIRE ALARM SYSTEM CONDUCTORS SHALL BE RUN IN A DEDICATED FIRE ALARM CONDUIT SYSTEM.

KEY PLAN

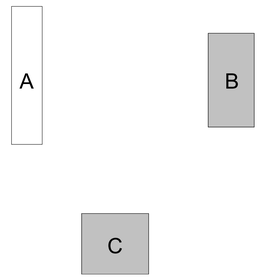

IDENTIFICATION STAMP
DIV. OF THE STATE ARCHITECT
APP: 02-119490 INC:
REVIEWED FOR
SS ☑ FLS ☑ ACS ☑
DATE: 09/13/2022

LPA
ARCHITECTURE ENGINEERING INTERIORS
LANDSCAPE ARCHITECTURE PLANNING

916-287-2400 Office
916-287-2401 Fax
LPADesignStudios.com
431 I Street,
Suite 107
Sacramento, California 95814

REGISTERED PROFESSIONAL ENGINEER
STEPHEN BANKS
E-17415
09/30/23
ELECTRICAL
STATE OF CALIFORNIA

This document and all other project documents, ideas, aesthetics and designs incorporated therein are instruments of service. All project documents are copyright protected, are the property of LPA, Inc. (LPA) and cannot be lawfully used in whole or in part for any project or purpose except as set forth in the contractual agreement between LPA and its Client. The unauthorized disclosure and/or use of the project documents (including the creation of derivative works), may give rise to liability for copyright infringement, unlawful disclosure, use or misappropriation of property rights held by LPA. The unauthorized use of the project documents will give rise to the recovery of monetary losses and damages including attorney fees and costs for which the unauthorized user will be held liable.
Project documents describe the design intent of the work and are not a representation of as-built or existing conditions. LPA is not responsible for any discrepancies between the project documents and the existing conditions.

© LPA, Inc.

DAVIS SENIOR HIGH SCHOOL
NEW AQUATICS CENTER
315 W 14TH ST., DAVIS, CA 95616

Developed for
DAVIS JOINT UNIFIED SCHOOL DISTRICT

Revision	Date

Submittal	Date
50% DESIGN DEVELOPMENT	06/15/2021
100% DD SUBMITTAL	07/26/2021
50% CD REVIEW	10/08/2021
100% CD DSA SUBMITTAL	10/22/2021
DSA SUBMITTAL	03/24/2022

Job Number	1904413
Date Published	03/24/2022
Checked By	LPA
Scale	1/8" = 1'-0"

FIRE ALARM - POOL MECHANICAL & RESTROOM BUILDING RCP

FA2.11

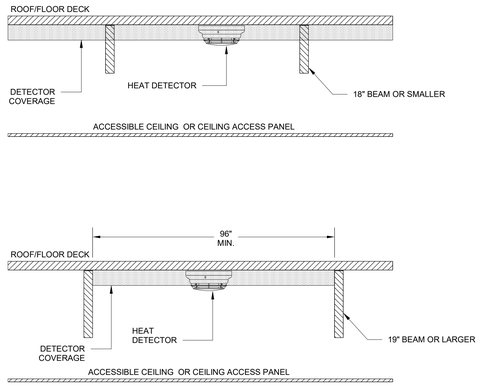

HEAT DETECTOR MOUNTING DETAIL | 1" = 1'-0" | 15

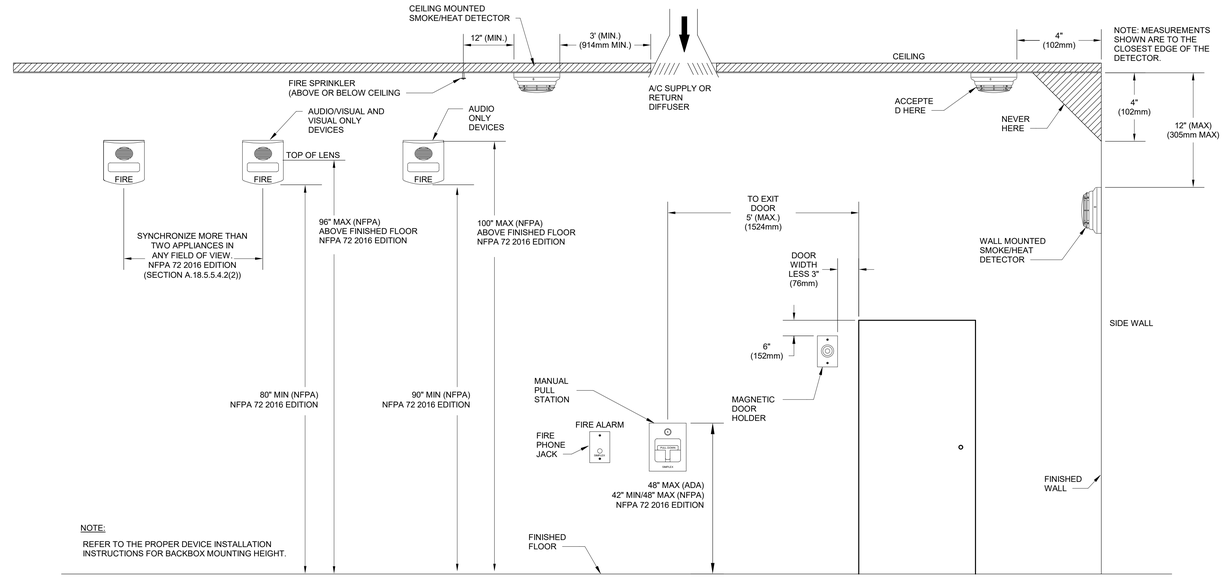

NOTE:

REFER TO THE PROPER DEVICE INSTALLATION INSTRUCTIONS FOR BACKBOX MOUNTING HEIGHT.

DEVICE MOUNTING DETAIL | 1" = 1'-0" | 03

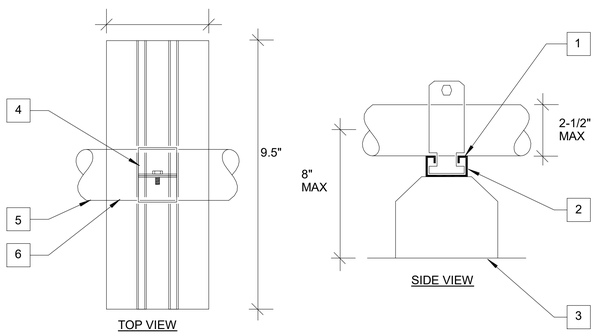

1. COOPER B-LINE DURA-BLOCK WITH INTEGRAL CHANNEL AND CONDUIT BRACKETS
2. PROVIDE GAP BETWEEN INTEGRAL STRUT CHANNEL AND HARDWARE USED TO SECURE CONDUIT TO ALLOW FOR MOVEMENT OF SYSTEM
3. SECURE COOPER N-LINE DURA-BLOCK TO ROOFING MATERIAL
4. PROVIDE STANDARD STRUT CLAMPS
5. MAXIMUM 2 CONDUITS PER BLOCK
6. CONDUIT

NOTES

PROVIDE A MAXIMUM OF 6'-0" BETWEEN SUPPORT BLOCKS. ADDITIONALLY PROVIDE BLOCK WITHIN 2'-0" OF ANY CHANGE OF DIRECTION. REFER TO MANUFACTURE'S DATA FOR BLOCK SPACING OF MULTIPLE CONDUITS

CONDUIT SUPPORT DETAIL | N.T.S | 14

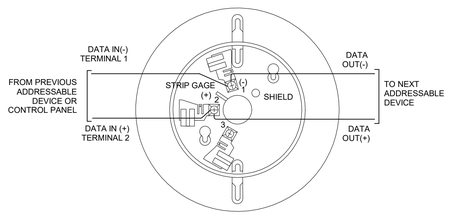

STANDARD DETECTOR BASE

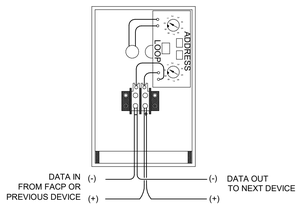

MANUAL PULL STATION

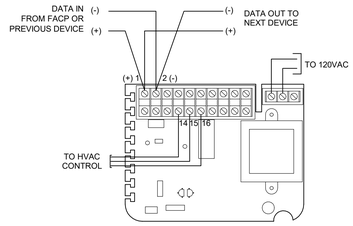

A/C UNIT SHUT-DOWN

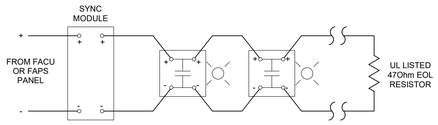

VISUAL APPLIANCE

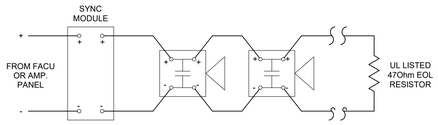

AUDIBLE APPLIANCE

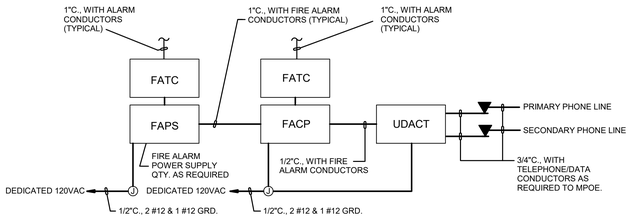

FIRE ALARM SYSTEM SCHEMATIC | 1" = 1'-0" | 13

TYPICAL DEVICE WIRING DIAGRAMS | 1" = 1'-0" | 01

IDENTIFICATION STAMP
DIV. OF THE STATE ARCHITECT
APP: 02-119490 INC:
REVIEWED FOR
SS ☑ FLS ☑ ACS ☑
DATE: 09/13/2022

LPA
ARCHITECTURE ENGINEERING INTERIORS
LANDSCAPE ARCHITECTURE PLANNING

916-287-2400 Office
916-287-2401 Fax
LPADesignStudios.com
431 I Street,
Suite 107
Sacramento, California 95814

REGISTERED PROFESSIONAL ENGINEER STEPHEN BANN E-17415 09/30/23 ELECTRICAL STATE OF CALIFORNIA

This document and all other project documents, ideas, aesthetics and designs incorporated therein are instruments of service. All project documents are copyright protected, are the property of LPA, Inc. (LPA) and cannot be lawfully used in whole or in part for any project or purpose except as set forth in the contractual agreement between LPA and its Client. The unauthorized disclosure and/or use of the project documents (including the creation of derivative works), may give rise to liability for copyright infringement, unlawful disclosure, use or misappropriation of property rights held by LPA. The unauthorized use of the project documents will give rise to the recovery of monetary losses and damages including attorney fees and costs for which the unauthorized user will be held liable.
Project documents describe the design intent of the work and are not a representation of as-built or existing conditions. LPA is not responsible for any discrepancies between the project documents and the existing conditions.

© LPA, Inc.

DAVIS SENIOR HIGH SCHOOL
NEW AQUATICS CENTER
315 W 14TH ST., DAVIS, CA 95616

Developed for
DAVIS JOINT UNIFIED SCHOOL DISTRICT

Revision	Date

Submittal	Date
50% DESIGN DEVELOPMENT	06/15/2021
100% DD SUBMITTAL	07/26/2021
50% CD REVIEW	10/08/2021
100% CD DSA SUBMITTAL	10/22/2021
DSA SUBMITTAL	09/24/2022

Job Number	1904413
Date Published	03/24/2022
Checked By	LPA
Scale	

FIRE ALARM DIAGRAMS AND DETAILS

FA4.00

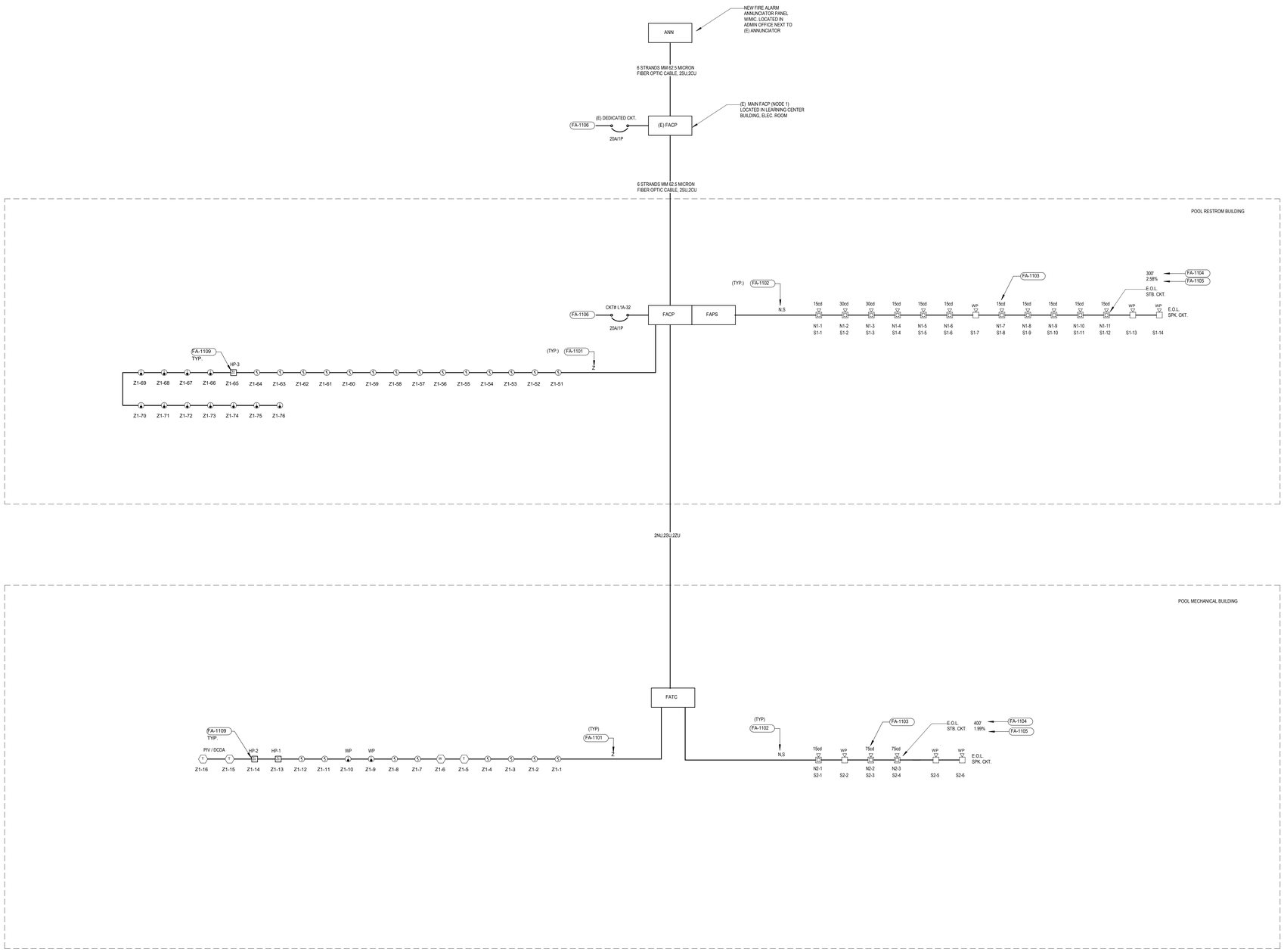

FA RISER DIAGRAM | 1" = 1'-0" | 01

KEYNOTES

ITEM	DESCRIPTION
FA-1101	ZONEABLE/ADDRESSIBLE CIRCUIT. PROVIDE 2#16 TWISTED PAIR PER CIRCUIT, TYPICAL.
FA-1102	NOTIFICATION CIRCUIT, PROVIDE 2#12 PER CIRCUIT, TYPICAL.
FA-1103	CANDELA RATING OF STROBE DEVICES.
FA-1104	DISTANCE TO END OF LINE (EOL) DEVICE.
FA-1105	WORST-CASE VOLTAGE DROP PERCENTAGE.
FA-1106	PROVIDE 3/4"C. WITH 2#12 GRD. DEDICATED CIRCUIT FOR FIRE ALARM EQUIPMENT. THIS CIRCUIT SHALL BE ENERGIZED FROM THE COMMON USE AREA PANEL AND SHALL HAVE NO OTHER OUTLETS. PROVIDE 20 AMP, 1-POLE CIRCUIT BREAKER WITH APPROVED LOCK-ON DEVICE TO BLOCK THE HANDLE IN "ON" POSITION. PROVIDE RED INDICATOR IN PANELBOARD AND LABEL "FIRE ALARM CIRCUIT CONTROL" AS REQUIRED. CIRCUIT ID TO BE LABELED AT FIRE ALARM PANEL/EXTENDER. MATCH A.I.C. RATING OF DEVICES CURRENTLY USED. PROVIDE ALL REQUIRED MOUNTING HARDWARE.
FA-1109	PROVIDE CONNECTION FOR ALL MECHANICAL A/C UNIT CONTROL AND FIRE/SMOKE DAMPERS. VERIFY LOCATION AND QUANTITY ON MECHANICAL DRAWINGS.

GENERAL NOTES FA RISER DIAGRAM

1. NOTIFICATION DEVICES IN ROOMS CONTAINING (2) OR MORE AUDIBLE AND/OR (2) OR MORE VISUAL DEVICES SHALL BE SYNCHRONIZED PER N.F.P.A. 72, 2016 EDITION (WITH CALIFORNIA AMENDMENTS). THIS SHALL INCLUDE AUDIBLE AND VISUAL DEVICES LOCATED IN ADJACENT/ADJOINING SPACES.
2. DO NOT DEVIATE FROM CONDUIT RUNS AS SHOWN ON FLOOR PLANS WITHOUT PRIOR APPROVAL FROM SYSTEM SUPPLIER/ENGINEER. FACTORS SUCH AS EXCESSIVE VOLTAGE DROP, ADDITIONAL PARTS, ENGINEERING, ETC. THAT ARE A RESULT OF CONDUIT RUN DEVIATIONS SHALL BE THE SOLE RESPONSIBILITY OF THE CONTRACTOR.
3. DETECTORS SHALL NOT BE LOCATED IN A DIRECT AIR-FLOW , NOT CLOSER THAN 3 FEET FROM ANY SUPPLY DIFFUSER.
4. FIRE ALARM SYSTEM AUDIBILITY SHALL NOT BE LESS THAN 15db ABOVE AMBIENT NOISE LEVELS AND MAINTAINING A MINIMUM OF 75db THROUGH OUT ALL AREAS OF ALARM.
5. FIRE ALARM SYSTEM AUDIBILITY SIGNAL SHALL MEET EMERGENCY EVACUATION SIGNAL AS DEFINED PER ANSI S3.41 (TEMPORAL PATTERN).
6. THE EXISTING CAMPUS FIRE ALARM SYSTEM SHALL BE MAINTAINED AND OPERATIONAL AT ALL TIMES DURING ALTERATIONS AND CONSTRUCTION. WHEN PORTIONS OF THE SYSTEM REQUIRE ALTERATIONS, THE REMAINDER OF THE SYSTEM SHALL BE KEPT IN SERVICE. IF NECESSARY TO SHUT DOWN ENTIRE FIRE ALARM SYSTEM, A FIRE WATCH SHALL BE KEPT ON SITE UNTIL THE FIRE ALARM SYSTEM IS RETURNED TO OPERATIONAL SERVICE. LOCAL FIRE AUTHORITY SHALL BE NOTIFIED 48 HOURS IN ADVANCE OF ANY SHUT DOWN.
7. CONTROL PANELS, REMOTE ANNUNCIATORS SHALL BE INSTALLED 48" TO TOP OF DEVICE.

IDENTIFICATION STAMP
DIV. OF THE STATE ARCHITECT
APP: 02-119490 INC:
REVIEWED FOR
SS ☑ FLS ☑ ACS ☑
DATE: 09/13/2022

LPA
ARCHITECTURE ENGINEERING INTERIORS
LANDSCAPE ARCHITECTURE PLANNING
916-287-2400 Office
916-287-2401 Fax
LPADesignStudios.com
431 I Street,
Suite 107
Sacramento, California 95814

REGISTERED PROFESSIONAL ENGINEER
STEPHEN BAKER
E-17415
09/30/23
ELECTRICAL
STATE OF CALIFORNIA

This document and all other project documents, ideas, aesthetics and designs incorporated therein are instruments of service. All project documents are copyright protected, are the property of LPA, Inc. (LPA) and cannot be lawfully used in whole or in part for any project or purpose except as set forth in the contractual agreement between LPA and its Client. The unauthorized disclosure and/or use of the project documents (including the creation of derivative works), may give rise to liability for copyright infringement, unlawful disclosure, use or misappropriation of property rights held by LPA. The unauthorized use of the project documents will give rise to the recovery of monetary losses and damages including attorney fees and costs for which the unauthorized user will be held liable.
Project documents describe the design intent of the work and are not a representation of as-built or existing conditions. LPA is not responsible for any discrepancies between the project documents and the existing conditions.

© LPA, Inc.

DAVIS SENIOR HIGH SCHOOL
NEW AQUATICS CENTER
315 W 14TH ST., DAVIS, CA 95616

Developed for
DAVIS JOINT UNIFIED SCHOOL DISTRICT

Revision	Date

Submittal	Date
50% DESIGN DEVELOPMENT	06/15/2021
100% DD SUBMITTAL	07/26/2021
50% CD REVIEW	10/08/2021
100% CD DSA SUBMITTAL	10/22/2021
DSA SUBMITTAL	03/24/2022

Job Number	1904413
Date Published	03/24/2022
Checked By	LPA
Scale	

FIRE ALARM RISER DIAGRAMS

FA5.00

IDENTIFICATION STAMP
DIV. OF THE STATE ARCHITECT
APP: 02-119490 INC:
REVIEWED FOR
SS ☑ FLS ☑ ACS ☑
DATE: 09/13/2022

Poject Name: Davis HS - Aquatics Center
Panel Location: Restroom Bldg. IDF Room 1011

E3 Series Control Panel with Broadband

Total Standby	0.958 A	Total Alarm	3.272 A

Device	Standby Current Qty		Draw	Standby	Alarm Current Qty		Draw	Alarm
1. System Device								
Intel. Loop Interface Main Board - Apollo (IU95-MB-E3)	1	x	0.05000	0.05000	1	x	0.09100	0.09100
Intel. Loop Interface Supplement Board - Apollo (IU95-S-E3)	1	x	0.05000	0.05000	1	x	0.09100	0.09100
2. E3 Optional Modules								
120V Power Supply Sub-Assembly (PM-9)	1	x	0.05000	0.05000	1	x	0.05000	0.05000
LCD Display & Switch Control (LCD-E3)	1	x	0.02400	0.02400	1	x	0.02800	0.02800
Network LCD Annunicator (NGA)	1	x	0.20000	0.20000	1	x	0.20000	0.20000
Auxiliary Switch Sub-Assembly (ASM-16)	1	x	0.01100	0.01100	1	x	0.01100	0.01100
4. INI-VGC Command Center								
Intel. Network Command Center (INI-VGC)	1	x	0.15000	0.15000	1	x	0.15000	0.15000
Addressable Switch Sub-assembly (ASM-16)	1	x	0.01100	0.01100	1	x	0.01100	0.01100
Voice Paging Microphone (Microphone)	1	x	0.00100	0.00100	1	x	0.00100	0.00100
5. INI-VGX Voice Gateway								
Intel. Network Voice Gateway (INI-VGX)	1	x	0.15000	0.15000	1	x	0.15000	0.15000
Amplifier Sub-assembly, 50 watt 25V (AM-50)	1	x	0.08600	0.08600	1	x	2.20600	2.20600
6. INI-VGE Command Center Voice Gateway								
Intel. Network Command Voice Gateway (INI-VGE)	1	x	0.15000	0.15000	1	x	0.15000	0.15000
Addressable Switch Sub-assembly (ASM-16)	1	x	0.01100	0.01100	1	x	0.01100	0.01100
Voice Paging Microphone (Microphone)	1	x	0.00100	0.00100	1	x	0.00100	0.00100
Addressable Control Module-Relay (RCE-95)	2	x	0.00080	0.00160	2	x	0.00150	0.00300
Addressable Monitor Module- (PID-95)	6	x	0.00050	0.00300	6	x	0.00150	0.00900
7. Smoke Detectors/Modules								
Smoke Detector	22	x	0.00034	0.00748	22	x	0.00434	0.09548
Heat Detector	2	x	0.00025	0.00050	2	x	0.00425	0.00850
Pull Station	0	x	0.00050		0	x	0.00150	
NAC Panel Activation	1	x	0.00000	0.00000	1	x	0.00500	0.00500
			Total Standby Load:	0.958 A			Total Alarm Load:	3.272 A

E3 Fire Alarm Control Panel with Broadband

Protected Premises: **Davis HS - Aquatics Center - FACP** Date: 10/8/2021
Address: 315 W. 14th Street
City: **Davis** State: **CA** Zip: **95722**

Prepared By: **LPA, INC** Phone:
Address: Email:
City: State: Zip:

Secondary Load Requirements **28.56** Amp Hours

Total Secondary Load from the calculation table below.

Current Draw		Time (hours)	Total (AH)
Secondary Standby Load 0.958 A	x	Required Standby Time 24 hours	22.98
Secondary Alarm Load 3.272 A	x	Required Alarm Time (hours) 0.250 hours	0.82
		Total Secondary Load	23.80
		Derating factor	x 1.20
		Secondary Load Requirements	**28.56 AH**

Battery Selection **31.00** Amp Hours
Select batteries from the list below.

31 AH Battery (12 volt)

Battery Distribution Chart
Shows amp-hour distribution of your selections.

Panel: FAPS-1

NAC SCHEDULE / VOLTAGE DROP CALCULATION
10 % MAXIMUM VOLTAGE DROP
CIRCUIT OUTPUT VOLTAGE = 20.4 (FOR CALCULATIONS)

CIRCUIT	DESCRIPTION	ESTIMATED CIRCUIT LENGTH	Strobe 15cd 0.041	Speaker Strobe 15cd 0.041	Speaker Strobe 30cd 0.063	Speaker Strobe 75cd 0.111	Speaker Strobe 95cd 0.134	Speaker Strobe 115cd 0.158	TOTAL CKT. LOAD (AMPS)	WIRE GAUGE (18, 16, 14, 12)	ACTUAL VOLTAGE DROP %	ACTUAL VOLTAGE DROP (VOLTS)	TOTAL CIRCUIT RESISTANCE	MAXIMUM ALLOWABLE CKT. LENGTH
			APPLIANCE QUANTITIES/CURRENT DRAW						VOLTAGE DROP TOTALS					
#N1	RESTROOM BUILDING STROBE CKT.	300 ft.		9	2				0.495	12	2.81%	0.573	1.2 Ohms	1,068 ft.
#N2	POOL MECHANICAL BUILDING STROBE CKT.	400 ft.		1		2			0.263	12	1.99%	0.406	1.5 Ohms	2,009 ft.
#N3	SPARE NAC CKT.	0 ft.							0.000	12	0.00%	0.000	0.0 Ohms	0 ft.
#N4	SPARE NAC CKT.	0 ft.							0.000	12	0.00%	0.000	0.0 Ohms	0 ft.
			Appliance Summary											
			0	10	2	2	0	0						

METHOD USED TO CALCULATE PERCENT OF VOLTAGE DROP:
[(CIRCUIT LENGTH IN FEET X 2) (AMPS X OHMS/FOOT)] X 100
20.4 VOLTS

Panel Location: Davis HS - Resroom Building - IDF Room 1011

Panel Name: POWER SUPPLY PANEL FAPS-1

Regulated Load in Standby

Device Type	Number of Circuits/Devices		Current (Amps)		Total Current (Amps)
GFPS6 Main Circuit Board	1	X	0.075	=	0.075
Power Supervision Relay	0	X	0.025	=	0
Auxiliary Device (Sounder Base for CO Det.)	0	X	0.0005	=	0
Notification Appliance Circuit					
Restroom Building NAC# N1	1	X	0.0004	=	0.0004
Pool Mech.Building NAC# N2	1	X	0.0004	=	0.0004
SPARE NAC	1	X	0.0004	=	0.0004
SPARE NAC	1	X	0.0004	=	0.0004
			STANDBY LOAD	=	**0.0766**

Regulated Load in ALARM

Device Type	Number of Devices		Current (Amps)		Total Current (Amps)
GFPS6 Main Circuit Board	1	X	0.205	=	0.205
Power Supervision Relay	0	X	0.025	=	0
Auxiliary Device (Sounder Base for CO Det.)	0	X	0.025	=	0.000
Notification Appliance Circuit					
Restroom Building NAC# N1	1	X	0.495	=	0.495
Pool Mech.Building NAC# N2	1	X	0.263	=	0.263
SPARE NAC	1	X	0.000	=	0.000
SPARE NAC	1	X	0.000	=	0.000
			ALARM LOAD	=	**0.963**

Battery Amp Hour Calculation

Standby Load Current (Amps)	0.0766	X	Required Standby Time (Typically 24 or 60 Hours) 24	=	1.8384 AH
Alarm Load Current (Amps)	0.963	X	Required Alarm Time (Typically 5 or 15 Minutes) 15	=	0.24 AH
			Sub Total Standby / Alarm Amp Hours		2.08 AH
			Multiply by the Derating Factor	X	1.2
			Total Ampere Hours Required	**=**	**3 AH**

(2)-7AH Batteries Required

DAVIS HS - RESTROOM & POOL MECH. BUILDINGS - SPEAKER...

SPEAKER CIRCUIT DESCRIPTION	PANEL CIRCUIT NUMBER	WIRE GAUGE (18, 16, 14, 12)	CIRCUIT VOLTAGE (25 OR 70 VRMS)	SPEAKER TAPPED AT 0.25 Watts	SPEAKER TAPPED AT 0.5 Watts	SPEAKER TAPPED AT 1 Watts	SPEAKER TAPPED AT 2 Watts	SPEAKER TAPPED AT 4 Watts	SPEAKER TAPPED AT 7.5 Watts	TOTAL CIRCUIT LOAD (WATTS)	ESTIMATED CIRCUIT LENGTH (FEET)	ACTUAL WIRE/LOSS (dB)	MAXIMUM ALLOWABLE CKT. LENGTH (FEET)	TOTAL CIRCUIT RESISTANCE (OHMS)
				SPEAKER CIRCUIT LOAD CALCULATION								MAXIMUM -3 dB DROP PER CIRCUIT		
				APPLIANCES QUANTITIES / TAP VALUES										
RESTROOM BLDG. SPEAKER CKT. S1	CKT #1	16 awg	25 vrms	7	0	4	1	0	2	22.75 Watts	1000 ft.	-2.27 dB	1,388 ft.	8.2 Ohms
POOL MECH. BLDG. SPEAKER CKT. S2	CKT #2	16 awg	25 vrms	0	0	1	3	0	2	22.00 Watts	1000 ft.	-2.20 dB	1,436 ft.	8.2 Ohms
SPARE SPEAKER CKT. S3	CKT #3	16 awg	25 vrms	0	0	0	0	0	0	0.00 Watts	1000 ft.	0.00 dB	0 ft.	8.2 Ohms
				Appliance Summary						Total Load (Watts)				
				7	0	5	4	0	4	44.75				

NOTE:
LUMP SUM METHOD WAS USED TO CALCULATE MAXIMUM ALLOWABLE CIRCUIT LENGTH. THIS METHOD...
MARGIN OF SAFETY, TAKING INTO CONSIDERATION THE ACTUAL INSTALLED CIRCUIT ROUTING MAY DIFF...
SHOWN ON THE SHOP DRAWINGS. IF THE ACTUAL CIRCUIT LENGTH IS GOING TO EXCEED THE MAXIMUM...
LENGTH, CONTACT YOUR LOCAL BRANCH.

LPA
ARCHITECTURE ENGINEERING INTERIORS
LANDSCAPE ARCHITECTURE PLANNING

916-287-2400 Office
916-287-2401 Fax
LPADesignStudios.com
431 I Street,
Suite 107
Sacramento, California 95814

REGISTERED PROFESSIONAL ENGINEER STEPHEN BANNON E-17415 09/30/23 ELECTRICAL STATE OF CALIFORNIA

This document and all other project documents, ideas, aesthetics and designs incorporated therein are instruments of service. All project documents are copyright protected, are the property of LPA, Inc. (LPA) and cannot be lawfully used in whole or in part for any project or purpose except as set forth in the contractual agreement between LPA and its Client. The unauthorized disclosure and/or use of the project documents (including the creation of derivative works), may give rise to liability for copyright infringement, unlawful disclosure, use or misappropriation of property rights held by LPA. The unauthorized use of the project documents will give rise to the recovery of monetary losses and damages including attorney fees and costs for which the unauthorized user will be held liable.
Project documents describe the design intent of the work and are not a representation of as-built or existing conditions. LPA is not responsible for any discrepancies between the project documents and the existing conditions.

© LPA, Inc.

DAVIS SENIOR HIGH SCHOOL
NEW AQUATICS CENTER
315 W 14TH ST., DAVIS, CA 95616

Developed for
DAVIS JOINT UNIFIED SCHOOL DISTRICT

Revision	Date

Submittal	Date
50% DESIGN DEVELOPMENT	06/15/2021
100% DD SUBMITTAL	07/26/2021
50% CD REVIEW	10/08/2021
100% CD DSA SUBMITTAL	10/22/2021
DSA SUBMITTAL	03/24/2022

Job Number	1904413
Date Published	03/24/2022
Checked By	LPA
Scale	

BATTERY AND VOLTAGE DROP CALCULATIONS

FA6.00

A. **TECHNOLOGY GENERAL NOTES:**

1. ALL STRUCTURED CABLING SYSTEM (SCS) & LOW VOLTAGE (LV) CABLING USED THROUGHOUT THIS PROJECT SHALL COMPLY WITH THE REQUIREMENTS AS OUTLINED IN THE STANDARDS, CODES AND LOCAL REGULATIONS FOR THE FOLLOWING: ANSI/TIA-568-C, ANSI/TIA-569-D, ANSI/TIA-606-B, ANSI/TIA-607-B, BICSI TDMM (CURRENT VERSION), CEC ARTICLE 90, ARTICLE 300, CEC ARTICLE 645, CEC ARTICLE 646, CEC ARTICLE 725, CEC ARTICLE 760, CEC ARTICLE 770, CEC ARTICLE 800, CEC ARTICLE 830. THE SCS & TECHNOLOGY SYSTEM(S) MUST MEET ALL LOCAL AND OTHER PREVAILING CODES.

2. ALL SCS & LV CABLING SHALL BEAR UL LISTED TYPE CMP (PLENUM RATED) AND/OR CM/G (GENERAL PURPOSE) AND/OR CMR (RISER RATED). ALL FIBER OPTIC CABLING SHALL BEAR OFNP (PLENUM RATED) AND/OR OFNR (RISER RATED) AND/OR OFN/G (GENERAL PURPOSE). THE CONTRACTOR IS RESPONSIBLE FOR INSTALLING APPROPRIATELY RATED CABLE FOR THE ENVIRONMENT IN WHICH IT IS INSTALLED.

3. ALL INSTALLATION SHALL BE DONE IN CONFORMANCE WITH ANSI/TIA-568-C STANDARDS AND MANUFACTURERS INSTALLATION GUIDELINES. THE CONTRACTOR SHALL ENSURE THAT THE CABLE'S MINIMUM BEND RADIUS AND, MAXIMUM PULLING TENSIONS OF THE SPECIFIED DISTRIBUTION CABLES ARE NOT EXCEEDED. THE CABLE BENDS MUST MAINTAIN THE PROPER RADIUS DURING THE PLACEMENT OF THE FACILITIES. FAILURE TO FOLLOW THE APPROPRIATE GUIDELINES WILL REQUIRE THE CONTRACTOR TO PROVIDE, IN A TIMELY FASHION, ANY ADDITIONAL MATERIAL AND LABOR NECESSARY TO PROPERLY RECTIFY THE SITUATION TO THE SATISFACTION AND WRITTEN APPROVAL OF THE OWNERS REPRESENTATIVE. THIS SHALL ALSO APPLY TO ANY AND ALL DAMAGES SUSTAINED TO THE CABLES BY THE CONTRACTOR DURING THE IMPLEMENTATION.

4. ALL SCS AND/OR LV INSTALLATIONS SHALL BE PERFORMED BY QUALIFIED TECHNICIANS FOR THAT SYSTEM. THE LABOR EMPLOYED BY THE CONTRACTOR SHALL BE REGULARLY EMPLOYED IN THE INSTALLATION AND REPAIR OF SCS AND/OR LV SYSTEMS AND SHALL BE ACCEPTABLE TO THE OWNERS REPRESENTATIVE TO ENGAGE IN THE INSTALLATION AND SERVICE OF THIS SYSTEM.

5. THE MDF AND IDF SPACES ARE DESCRIBED BELOW, AND ENCOMPASS THE AREAS THE COMMUNICATIONS CABLING EXISTS IN. THESE AREAS INCLUDE (BUT NOT LIMITED TO) THE BACKBOARDS, CABINETS, RACKS, FRAMES, LADDER RACKS, TERMINATION FIELDS, AND PATCH CORDS. (WALL AND RACK TYPES FOR COPPER AND FIBER). THE SCS CONTRACTOR IS RESPONSIBLE FOR FOLLOWING THE STANDARDS, CODES AND LOCAL REGULATIONS FOR THESE SPACES, (E.G. ANSI/TIA-568-C, ANSI/TIA-569-D, ANSI/TIA-606-B, ANSI/TIA-607-B , BICSI TDMM (CURRENT VERSION), CEC ARTICLE 90, ARTICLE 300, CEC ARTICLE 645, CEC ARTICLE 646, CEC ARTICLE 725, CEC ARTICLE 770, CEC ARTICLE 800, CEC ARTICLE 830.

6. THE WIRING OF THE SYSTEM SHALL BE EXECUTED IN ACCORDANCE WITH THE DRAWINGS AND THE EQUIPMENT MANUFACTURER'S WIRING DIAGRAMS. SHOULD ANY VARIATIONS IN THESE REQUIREMENTS OCCUR, THE CONTRACTOR SHALL NOTIFY THE OWNERS REPRESENTATIVE BEFORE MAKING ANY CHANGES. IT SHALL BE THE RESPONSIBILITY OF THE MANUFACTURER - AUTHORIZED INSTALLER OF THE APPROVED EQUIPMENT TO INSTALL THE EQUIPMENT AND GUARANTEE THE SYSTEM TO OPERATE AS PER PLANS AND SPECIFICATIONS.

7. ALL MATERIALS SHALL BE NEW. NO USED OR RE-MANUFACTURED PARTS OR COMPONENTS SHALL BE ACCEPTED.

8. CABLE STORAGE:
THE CONTRACTOR SHALL NOT ROLL OR STORE CABLE REELS WITHOUT AN APPROPRIATE UNDERLAY AND THE PRIOR WRITTEN APPROVAL OF OWNERS REPRESENTATIVE.

9. SPECIAL EQUIPMENT AND TOOLS:
IN ORDER TO ENSURE THE LEAST AMOUNT OF CABLE UNTWISTING, IT IS REQUIRED THAT ALL CABLES SHALL BE STRIPPED USING A CABLE MANUFACTURER'S RECOGNIZED SPECIAL TOOL. IT SHALL BE THE RESPONSIBILITY OF THE CONTRACTOR TO FURNISH ANY SPECIAL INSTALLATION EQUIPMENT OR TOOLS NECESSARY TO PROPERLY COMPLETE THE SYSTEM. THIS MAY INCLUDE, BUT IS NOT LIMITED TO, TOOLS FOR TERMINATING CABLES, TESTING AND SPLICING EQUIPMENT FOR COPPER/FIBER CABLES, COMMUNICATION DEVICES, JACK STANDS FOR CABLE REELS, OR CABLE WINCHES.

10. UNDER NO CIRCUMSTANCE ARE "CHANNEL LOCKS" OR OTHER PLIERS NOT DESIGNED BY THE SCS MANUFACTURE TO BE USED TO TERMINATE WAO JACKS.

B. **TECHNOLOGY PATHWAY NOTES:**

1. PATHWAYS CAN BE DIVIDED UP INTO TWO SEPARATE CATEGORIES, OUTSIDE PLANT (OSP) AND INSIDE PLANT (ISP). IT IS THE SCS AND/OR LV SYSTEM(S) CONTRACTOR'S RESPONSIBILITY TO IDENTIFY ALL EXISTING PATHWAYS (CONDUIT, CABLE TRAY, ETC) THAT WILL BE UTILIZED ON THE PROJECT, AND COORDINATE WITH THE ON-SITE ELECTRICAL OR GENERAL CONTRACTOR TO PROVE ALL PATHS SUBJECT TO BE USED ON THIS PROJECT, BEFORE INSTALLATION. THE CONTRACTOR IS RESPONSIBLE FOR THE INSTALLATION ALL UNDERGROUND (OSP) PATHWAYS, NON-ACCESSIBLE AND OPEN CEILING SPACE PATHWAYS AS DESCRIBED IN SECTION F, CONTRACTOR GUIDELINES OF THESE TECHNOLOGY GENERAL NOTES.

2. ALL PULL-BOXES SHALL BE SIZED AND INSTALLED PER ANSI/TIA-569-D. PULL-BOXES FOR IN/UNDER SLAB CONDUIT RUNS ARE NOT PERMITTED UNLESS OTHERWISE NOTED. PULL-BOXES FOR OVERHEAD CONDUIT RUNS SHALL BE LOCATED ABOVE ACCESSIBLE CEILINGS WITHIN THE ACCESSIBLE CEILING SPACE AND SUPPORTED INDEPENDENTLY FROM THE STRUCTURE AND CONDUIT SUPPORTS. PULL-BOXES FOR ROOF MOUNTED OR EXTERIOR ABOVE GRADE APPLICATIONS SHALL BE NEMA 3R RATED. PULL-BOXES SHALL BE SIZED ACCORDING TO THE FOLLOWING:

FOR FILL RATIO BASED CONDUIT SIZING REFER TO THE FILL RATIO TABLE 1A - 2B BELOW AND REFERENCE TO ANSI/TIA-569-D.

PULLBOX SIZING PER ANSI/TIA 569-D

Conduit Size	WIDTH	LENGTH	DEPTH	WIDTH INCREASE PER ADDITIONAL...
1"	4"	15"...	3"	2"
2"	8"	36"	4"	5"
3"	61	48"	5"	6"
4"	101	60"	8"	8"

FILL RATIO TABLE 1A - Conduit

Conduit Size	.13	.18	.19	.20	.21	.22	.23	.24	.25	.26	.27	.28	.29	.30	.31	.32	.33	.34	.35	.37	.39
3/4"	16	8	7	6	6	5	5	4	4	4	3	3	3	3	2	2	2	2	2	1	1
1"	26	13	12	11	9	9	8	7	7	6	6	5	5	4	4	4	4	3	3	3	2
1 1/4"	45	23	21	19	17	15	14	13	12	11	10	9	9	8	7	7	6	6	6	5	5
1 1/2"	61	32	28	25	23	21	19	18	16	15	14	13	12	11	10	10	9	8	8	7	6
2"	101	52	47	42	38	35	32	29	27	25	23	21	20	18	17	16	15	14	13	12	11
2 1/2"	176	92	82	74	67	61	56	51	47	44	40	38	35	33	31	29	27	25	24	21	19
3"	266	139	124	112	102	93	85	78	72	66	61	57	53	50	46	43	41	38	36	32	29
3 1/2"	347	181	162	146	133	121	111	102	94	86	80	74	69	65	61	57	53	50	47	42	38
4"	444	231	208	187	170	155	142	130	120	111	103	95	89	83	78	73	68	64	61	54	49

FILL RATIO TABLE 1B - Conduit

Conduit Size	.41	.45	.49	.51	.55	.59	.61	.65	.69	.71	.75	.79	.85	.98	1.00	1.32	1.58	1.79	2.18	2.63	3.00 (47%)
3/4"	1	1	1	1	-	-	-	-	-	-	-	-	-	-	-	-	-	-	-	-	-
1"	2	2	1	1	1	1	1	1	-	-	-	-	-	-	-	-	-	-	-	-	-
1 1/4"	4	3	3	2	2	2	2	1	1	1	1	1	1	-	-	-	-	-	-	-	-
1 1/2"	6	5	4	3	3	2	2	2	2	2	1	1	1	1	1	-	-	-	-	-	-
2"	10	8	7	6	5	4	4	4	3	3	3	2	2	1	1	-	-	-	-	-	-
2 1/2"	17	14	12	11	9	8	8	7	6	5	5	4	4	3	2	1	1	-	-	-	-
3"	26	22	18	17	14	12	12	10	9	8	8	7	6	4	4	2	1	-	-	-	-
3 1/2"	34	29	24	22	19	16	15	13	12	11	10	9	8	6	5	3	2	1	1	-	-
4"	44	37	31	28	24	21	20	17	15	14	13	12	10	7	7	4	3	2	1	1	1

FILL RATIO TABLE 2A - Cable Tray / Wire Basket / Raceway per NEC 2017 Article 725

Tray Size (WxD)	.13	.18	.19	.20	.21	.22	.23	.24	.25	.26	.27	.28	.29	.30	.31	.32	.33	.34	.35	.37	.39
4x4	482	251	225	203	184	168	154	141	130	120	111	103	96	90	84	79	74	70	66	59	53
6x4	723	377	338	305	277	252	231	212	195	180	167	155	145	135	127	119	112	105	99	89	80
12x4	1447	754	677	661	554	505	462	424	391	361	335	311	290	271	254	238	224	211	199	178	160
18x4	2170	1132	1016	917	831	758	693	636	587	542	503	467	436	407	381	358	336	317	299	267	241
24x4	2894	1509	1355	1222	1109	1010	924	849	782	732	671	623	581	543	509	477	449	423	399	357	321
6x6	1085	566	508	458	415	379	346	318	293	271	251	233	218	203	190	179	168	158	149	133	120
12x6	2170	1132	1016	917	831	758	693	636	587	542	503	467	436	407	381	358	336	317	299	267	241
18x6	3256	1698	1524	1375	1247	1137	1040	955	880	814	754	701	654	611	572	537	505	476	449	401	361
24x6	4341	2264	2032	1834	1663	1516	1387	1273	1174	1085	1006	935	872	815	763	716	673	634	598	535	482

FILL RATIO TABLE 2B - Cable Tray / Wire Basket / Raceway

Tray Size (WxD)	.41	.45	.49	.51	.55	.59	.61	.65	.69	.71	.75	.79	.85	.98	1.00	1.32	1.58	1.79	2.18	2.63	3.00 (47%)
4x4	48	40	33	31	26	23	21	19	17	16	14	13	11	8	8	4	3	2	-	-	-
6x4	72	60	50	47	40	35	32	28	25	24	21	19	16	12	12	7	4	3	2	-	-
12x4	145	120	101	94	80	70	65	57	51	48	43	39	33	25	24	14	9	7	5	3	2
18x4	218	181	152	141	121	105	98	86	77	72	65	58	50	38	36	21	14	11	7	5	4
24x4	291	241	203	188	161	140	131	115	102	97	86	78	67	50	48	28	19	15	10	7	5
6x6	109	90	76	70	60	52	49	43	38	36	32	29	25	19	18	10	7	5	-	-	-
12x6	218	181	152	141	130	105	106	86	77	72	65	58	50	38	36	21	14	11	7	5	4
18x6	327	271	229	211	181	158	147	130	115	109	97	88	76	57	55	31	22	17	11	7	6
24x6	436	362	305	282	242	210	197	173	154	145	130	117	101	76	73	42	29	22	15	10	8

PATHWAY SEPARATION FROM SOURCE OF ELECTROMAGNETIC ENEGRY:

CONDITION	<2KVA	2-5 KVA	>5KVA
Unshielded Power Lines in Proximity to open PVC Pathways	5" (In.)	12" (In.)	24" (In.)
Unshielded Power Lines in Proximity to Grounded Metallic Pathways	2.5" (In.)	6" (In.)	12" (In.)
Power Lines enclosed in Metal Grounded Pathways in proximity to Grounded Metallic...	<1" (In.)	3" (In.)	6" (In.)

B. **TECHNOLOGY PATHWAY NOTES: (CONT.)**

3. FOR ALL FIRESTOPPING OF SCS AND LV SYSTEMS PATHWAY RESPONSIBILITIES REFERENCE SECTION G, PENETRATION OF WALLS, FLOOR AND CEILINGS OF THESE TECHNOLOGY GENERAL NOTES.

4. FOR ALL OTHER SCS AND/OR LV SYSTEMS PATHWAY RESPONSIBILITIES REFERENCE SECTION F, CONTRACTOR GUIDELINES OF THESE TECHNOLOGY GENERAL NOTES.

5. OUTSIDE PLANT (OSP) PATHWAYS CAN BE BROKEN DOWN INTO THE FOLLOWING ITEMS, MAINTENANCE HOLES, HAND HOLES, PULLBOXES, AND CONDUITS.
   a. WHILE ENTERING MAINTENANCE HOLES, HAND HOLES, PULLBOXES, FOLLOW ALL CODES AND SAFETY PRACTICES OF A "CONFINED SPACE". UTILIZE NECESSARY EQUIPMENT TO MAINTAIN ALL SAFE PULLING TENSIONS FOR THE CABLES TO BE INSTALLED. THIS INFORMATION CAN BE FOUND ON THE CABLE MANUFACTURER'S SPECIFICATIONS SHEETS.
   b. BEFORE EXITING THE MAINTENANCE HOLE, HAND HOLE, PULLBOX, NOTE ON PAPER OR DIGITAL MEANS THE EXISTING AND NEW CABLE(S) LOCATION(S) AND ROUTE(S), AND PROVIDE A "BUTTERFLY" PRINT TO AHJ AND OWNER'S REPRESENTATIVE. LABEL THE INSTALLED MEDIA PER SPECIFICATIONS.
   c. WITH DIRECTION OF OWNER OR OWNER'S REPRESENTATIVE, CHOOSE AND PROVE ALL CONDUITS BEFORE THE INSTALLATION OF THE MEDIA. MEASURE ALL PATHWAYS WITH MULE-TAPE PRIOR TO ORDERING MATERIAL. ALL LABOR AND MATERIAL COSTS ASSOCIATED WITH DISCREPANCIES BETWEEN DRAWINGS AND VERIFIABLE SITE CONDITIONS SHALL BE BORNE BY CONTRACTOR. COORDINATE WITH THE ELECTRICAL OR GENERAL CONTRACTOR (EC OR GC), IF CONDUITS ARE PLUGGED OR MISSING PULL ROPE.
   d. TRAIL ALL BACKBONE MEDIA (I.E. COPPER, FIBER OR INNERDUCT) WITH A 3/8" YELLOW POLY-NYLON ROPE, LABEL THE ROPE, AND TIE OFF EITHER END, FOR FUTURE INSTALLATIONS.
   e. PROVIDE AND INSTALL ALL HARDWARE NECESSARY TO SUPPORT THE CABLING TO THE WALLS OF THE MAINTENANCE HOLE, HAND HOLES, PULLBOX. (IF IT DOES NOT ALREADY EXIST) THIS HARDWARE IS TO BE CONSTRUCTED FOR THE AREA IT IS TO BE INSTALLED AND DESIGNED FOR THE PURPOSE INTENDED FOR ITS USE.
   f. SCS AND/OR LV CONTRACTOR TO PROVIDE EXPANSION PLUGS IN ALL DUCTS/CONDUITS ENTERING THE BUILDING. SEAL ALL UNUSED DUCTS/CONDUITS WITH PLUGS THAT ALLOW THE PULL-STRING TO BE TIED OFF ON THE INSIDE.

6. INSIDE PLANT (ISP) PATHWAYS CAN BE BROKEN DOWN INTO THE FOLLOWING ITEMS, HOLLOW WALL PENETRATION, MEMBRANE PENETRATION, ACCESSIBLE CEILING (I.E. "J" HOOKS), AND CONDUIT.

7. CABLE RACEWAYS AND CONDUITS SHALL NOT BE FILLED GREATER THAN THE CEC 2017, ARTICLE 725 AND BICSI RECOMMENDED FILL FOR THE PARTICULAR RACEWAY OR CONDUIT SIZE FOR CLASS 2/3 WIRE/CABLE.
   a. CONDUIT AND PATHWAY ROUTING SHOWN FOR THE SCS AND LV SYSTEMS ARE STRICTLY DIAGRAMMATICAL FOR THE PURPOSE OF THE BID TO ILLUSTRATE GENERAL METHODOLOGY. IT IS THE RESPONSIBILITY OF THE CONTRACTOR TO DETERMINE THE BEST MEANS & METHODS FOR SCS & TECHNOLOGY CONDUIT AND PATHWAY INSTALLATION. ADDITIONALLY IT IS THE RESPONSIBILITY OF THE CONTRACTOR TO COORDINATE THE INSTALLATION PLAN WITH THE OWNERS REPRESENTATIVE AND ALL TRADES PRIOR TO INSTALLATION. REFER TO PLANS AND GENERAL ELECTRICAL SPECIFICATION FOR ADDITIONAL REQUIREMENTS.
   b. CONDUIT PATHWAYS SHALL BE SUPPLIED BY THE ELECTRICAL OR GENERAL CONTRACTOR AS PER THE DRAWINGS, OTHER CONDUITS (IF ANY) MAY NEED TO BE COORDINATED WITH THE EC AND/OR GC OF THE PROJECT.
   c. NO CABLE IS TO BE PULLED THROUGH A CONDUIT L-BEND "LB" (CONDULETS).
   d. ALL EXPOSED CONDUIT AND HARDWARE SHALL BE PAINTED TO MATCH SURROUNDING SURFACES. CONTRACT DISTRICT REPRESENTATIVE FOR PAINT COLORS.
   e. CONDUITS SHALL CONTAIN PLASTIC OR NYLON PULL TAPE RATED AT 200 LBS. WITH A MINIMUM OF 5 FEET OF EXTRA PULL TAPE COILED AT EACH END.
   f. TERMINATE CONDUIT STUBS AND SLEEVES THAT PROTRUDE THROUGH STRUCTURAL FLOORS 2"-3" ABOVE THE FLOOR SURFACE.
   g. INSTALL BUSHINGS AND BELL ENDS AS REQUIRED ON ALL CONDUITS.
   h. FLEX CONDUIT IS UNACCEPTABLE FOR USE AS A COMMUNICATIONS CONDUIT EXCEPT AT SEISMIC JOINTS AND/OR IF APPROVED IN WRITING BY THE ENGINEER.
   i. ALL UNDER SLAB OR IN-SLAB CONDUITS SHALL BE INSTALLED IN A MANNER THAT PREVENTS WATER INFILTRATION OF THE CONDUIT. IT IS THE CONTRACTOR'S RESPONSIBILITY TO ENSURE GROUND WATER, RAIN WATER OR CONSTRUCTION WATER IS PREVENTED FROM ENTERING AND/OR REMOVED FROM THE CONDUITS PRIOR TO PLACEMENT OF COMMUNICATIONS CABLES. SEE ELECTRICAL SPECIFICATIONS, DETAILS AND PLANS FOR ADDITIONAL CONDUIT SEALING REQUIREMENTS.
   j. PROVIDE LABELING OF EACH CONDUIT PER GENERAL ELECTRICAL SPECIFICATIONS.
   k. REINSTALL PULL-STRINGS IN ALL SCS AND LV ISP PATHWAYS AFTER USE TO FACILITATE FUTURE ADDITION OF CABLES.
   l. IT IS THE SCS AND/OR LV CONTRACTOR'S RESPONSIBILITY TO REPORT ANY UNUSABLE OR INADEQUATE CONDUIT RUNS TO THE OWNER PRIOR TO PULLING ANY CABLE.
   m. PULL BOXES ARE NOT TO BE USED IN LIEU OF A BEND, AND THE CONDUIT SHALL EXIT A PULLBOX ON THE WALL OPPOSITE THE WALL ENTERED.
   n. CONDUITS SHALL;
      - CONTAIN NO CONTINUOUS SECTIONS LONGER THAN 30M (98 FT.)
      - CONTAIN NO MORE THAN (2) 90° BENDS OR (1) REVERSE BEND WITHOUT INSTALLING A PULLBOX SIZED PER STANDARDS & CODE.
      - SPLIT CONDUITS IN PLACE OF PULLBOXES ARE UNACCEPTABLE.
   o. CONDUIT BEND RADIUS SHALL BE;
      - A MINIMUM OF 6 TIMES THE INTERNAL CONDUIT DIAMETER FOR CONDUITS 2" IN DIAMETER OR LESS.
      - A MINIMUM OF10 TIMES THE INTERNAL CONDUIT DIAMETER FOR CONDUITS MORE THAN 2" IN DIAMETER.
   p. POWER SEPARATION:
      - THE CONTRACTOR SHALL NOT PLACE ANY DISTRIBUTION CABLING ALONGSIDE POWER LINES, OR SHARE THE SAME CONDUIT, CHANNEL OR SLEEVE WITH ELECTRICAL APPARATUS. AT NO POINT SHALL THE COMMUNICATIONS CABLES BE TIED TO POWER CABLES OR OTHER BUILDING SERVICES. STATION CABLES AND TIE CABLES INSTALLED WITHIN CEILING SPACES SHALL BE ROUTED THROUGH THESE SPACES AT RIGHT ANGLES TO ELECTRICAL POWER CIRCUITS.
      - AVOID ELECTROMAGNETIC INTERFERENCE (EMI) BY MAINTAINING ADEQUATE PHYSICAL SEPARATION BETWEEN TECHNOLOGY CABLING AND POSSIBLE SOURCES SUCH AS, BUT NOT LIMITED TO, ELECTRIC MOTORS, ELECTRIC PENCIL SHARPENERS, TRANSFORMERS, FLUORESCENT LIGHTS THAT SHARE DISTRIBUTION SPACE WITH TELECOMMUNICATIONS CABLING, COPIERS THAT SHARE WORK AREA SPACE WITH LINE CORDS AND TERMINALS, LARGE FAX MACHINES AND POWER CORDS THAT SUPPORTS SUCH EQUIPMENT.

C. **TECHNOLOGY CABLING NOTES:**

1. THE USE OF LUBRICANTS SUCH AS CLEAR GLIDE, TO FACILITATE THE INSTALLATION OF CABLES IN CONDUITS IS ENCOURAGED FOR FRICTION REDUCTION AND TO MAINTAIN THE REQUIRED PULL TENSION. YELLOW 77 AND POLYWATER "F" IS PERMISSIBLE FOR USE AS A LUBRICANT FOR ISP TECHNOLOGY CABLING. THE USE OF OSP, LOW TEMPERATURE CABLE LUBRICANTS SHALL NOT BE ACCEPTABLE IN AN INDOOR PLENUM ENVIRONMENT. UNDER NO CIRCUMSTANCES SHALL CABLE PULLING LUBRICANT BE ALLOWED TO ACCUMULATE ON WALLS, FLOORS, BACKBOARDS, OR OTHER SURFACES OUTSIDE THE CONDUIT.

2. ANY CABLE DAMAGED OR EXCEEDING RECOMMENDED INSTALLATION PARAMETERS DURING INSTALLATION SHALL BE REPLACED BY THE CONTRACTOR BEFORE FINAL ACCEPTANCE AT NO COST TO THE OWNER.

3. EACH RUN OF CABLE BETWEEN THE TERMINATION BLOCK OR PATCH PANEL AND THE STATION CONNECTOR SHALL BE CONTINUOUS WITHOUT ANY JOINTS OR SPLICES.

4. ALL STATION CABLE SHALL BE PLACED IN THE INTERIOR OF WALLS UNLESS OTHERWISE NOTED OR OBSTRUCTED.

5. PROVIDE BUSHINGS, GROMMETS AND STRAIN-RELIEF FOR CABLES TERMINATING AT WALL-MOUNTED OUTLETS AND PATCH PANELS TO ENSURE DURABLE AND ROBUST CONNECTIONS. THE BUSHINGS AND GROMMETS ARE INTENDED TO PROTECT THE CABLES FROM ANY SHARP EDGES THAT PRESENT A RISK TO THE CABLES. ENSURE THAT ALL SHARP EDGES ARE COVERED TO PROTECT THE CABLES FROM DAMAGE.

6. ALL CABLE BUNDLES EXITING FLOOR OR WALL PENETRATIONS AND RUNNING INTO FURNITURE OR CASEWORK SHALL BE WRAPPED IN SPIRAL WRAP OR SPLIT-LOOM TUBING TO PROTECT THE CABLING AND PROVIDE A NEAT INSTALLATION.

7. ALL CABLE OR INNERDUCT SHALL RUN PARALLEL OR AT RIGHT ANGLES TO BUILDING WALL STRUCTURES.

8. IN SUSPENDED CEILING AND RAISED FLOOR AREAS WHERE DUCT, CABLE TRAYS OR CONDUIT ARE NOT AVAILABLE, CABLE BUNDLES SHALL BE SUPPORTED VIA "J" HOOKS ATTACHED TO THE BUILDING STRUCTURE AND FRAMEWORK AT A MAXIMUM OF FIVE (5) FOOT INTERVALS. MINIMUM 1" WIDE J-HOOKS SHALL BE APPROPRIATELY SIZED TO ALLOW A MINIMUM OF 60% SPARE CAPACITY FOR FUTURE CABLE INSTALLATION. THE CONTRACTOR SHALL INCLUDE ALL COSTS IN BASE BID FOR ANY ADDITIONAL SUPPORTS/SEISMIC BRACING REQUIRED BY THE LOCAL AUTHORITY HAVING JURISDICTION.

9. THE CONTRACTOR SHALL BUNDLE, IN BUNDLES OF 48 OR LESS, STATION OR OTHER CABLING WITH 3/4" HOOK AND LOOP "VELCRO" STRIPS TIGHT ENOUGH TO HOLD THE BUNDLE TOGETHER IN A CYLINDRICAL SHAPE, BUT NOT SO TIGHT AS TO DEFORM THE CABLE GEOMETRY. IT SHALL BE POSSIBLE TO COMPLETELY ROTATE ALL HOOK AND LOOP TIES AROUND ALL CABLE BUNDLES. PLENUM RATED HOOK AND LOOP TIES WILL BE USED IN ALL PLENUM AREAS.

10. CABLES OR J-HOOKS SHALL NOT BE ATTACHED TO LIFT OUT CEILING GRID SUPPORTS OR LAID DIRECTLY ON THE CEILING GRID.

11. CABLES OR J-HOOKS SHALL NOT BE ATTACHED TO OR SUPPORTED BY FIRE SPRINKLER HEADS OR DELIVERY SYSTEMS OR ANY ENVIRONMENTAL SENSOR LOCATED IN THE CEILING AIR SPACE.

12. WHERE ADDITIONAL CONDUIT(S)/SLEEVE(S) ARE REQUIRED, BUT NOT PROVIDED BY THE CONTRACTOR, THE SCS AND/OR LV CONTRACTOR SHALL BE RESPONSIBLE TO PROVIDE SUCH CONDUIT(S)/SLEEVE(S). CONDUIT(S) AND SLEEVE(S) SHALL BE OF SUITABLE MATERIAL, SIZED, INSTALLED, FIRE-STOPPED, AND GROUNDED AS REQUIRED BY THE CEC 2017, ANSI/TIA-569-D STANDARD AND ALL OTHER APPLICABLE CODES AND STANDARDS. SLEEVES SHALL CONSIST OF METALLIC CONDUIT DE-BURRED AND GROMMETTED ON BOTH ENDS WITH FLANGES OR OTHER MEANS TO PREVENT THE SLEEVE FROM SLIPPING OR FALLING OUT OF THE PARTITION. SLEEVES SHALL EXTEND A MINIMUM OF 6" ON BOTH SIDES OF THE PARTITION. OUTSIDE PERIMETER OF SLEEVES SHALL BE SEALED AGAINST SOUND, AIR, WATER, HEAT, OR AS REQUIRED BY PARTITION DESIGN. INSIDE OF SLEEVE SHALL BE SEALED SIMILARLY AFTER INSTALLATION OF ALL CABLING. CABLES SHALL BE INDEPENDENTLY SUPPORTED ON EITHER SIDE OF THE SLEEVE. SLEEVES SHALL NOT BE USED AS CABLE SUPPORTS. ANY CONDUIT(S) AND SLEEVE(S) ADDED BY THE SCS CONTRACTOR SHALL BE APPROVED BY THE OWNERS REPRESENTATIVE PRIOR TO ROUGH-IN.

13. IN THE EVENT CONTRACTOR IS REQUIRED TO REMOVE CEILING TILES, SUCH WORK SHALL NOT BREAK OR DISTURB GRID. REMOVAL OF THE CEILING GRID MUST BE COORDINATED WITH THE OWNERS REPRESENTATIVE. ALL INSULATION SHALL BE REPLACED IN ITS ORIGINAL LOCATION.

14. THE NUMBER OF CABLES IN EACH CONDUIT SHALL BE CONTROLLED TO ALLOW FOR FUTURE CABLE INSTALLATION AND TO STAY WITHIN THE MANUFACTURER'S MAXIMUM ALLOWABLE CABLE PULLING TENSION. CONDUIT FILL RATIOS SHALL NOT EXCEED THE CURRENT REQUIREMENTS OF THE CEC 2017, ANSI/TIA-569-D, REFERENCE SECTION B.2, TABLES 1 AND 2 OF THIS DOCUMENT FOR ADDITIONAL REQUIREMENTS.

15. CONDUITS:
   - ALL BACKBONE CABLING WILL RUN THROUGH DEDICATED CONDUITS.
   - ALL NEW CONDUITS WILL BE SUPPLIED WITH A PULL STRING BY THE CONTRACTOR.
   - EXISTING CONDUITS SHALL BE PROVEN TO BE CLEAR BY THE SCS AND/OR LV CONTRACTOR PRIOR TO PULLING OF CABLES.
   - SCS AND/OR LV CONTRACTOR SHALL SUPPLY PULL STRING AND PULL ROPE FOR THE INSTALLATION OF ALL CABLES IN EXISTING CONDUITS.
   - FOR ALL CONDUITS LEFT WITH AVAILABLE CAPACITY, SCS AND/OR LV CONTRACTOR SHALL REPLACE PULL STRINGS DURING THE COURSE OF HIS WORK.
   - SCS AND/OR LV CONTRACTOR MUST SEAL ALL CONDUITS WITH AN APPROVED SEALING COMPOUND.

D. **TECHNOLOGY GROUNDING SYSTEM NOTES.**

1. THE CONTRACTOR SHALL PROVIDE A TELECOMMUNICATION GROUNDING BUSSBAR (TGB) AND TELECOMMUNICATION BONDING BACKBONE (TBB) CABLE(S) AT EACH MDF ROOM AND IDF LOCATION. TERMINATE THE TBB ON GROUND BARS LOCATED AT EACH MDF ROOM AND IDF CABINET FROM BUILDING STEAL OR MAIN ELECTRICAL GROUND, OR AS OTHERWISE INDICATED ON THE DRAWINGS.

2. THE SCS CONTRACTOR SHALL UTILIZE A TELECOMMUNICATIONS BONDING BACKBONE (TBB) AS INDICATED IN THE DRAWINGS. GROUNDING MUST BE IN ACCORDANCE WITH THE CEC 2017, ANSI/TIA-607-B AND ALL LOCAL CODES AND PRACTICES.

3. THE SCS CONTRACTOR SHALL BE RESPONSIBLE FOR BONDING ALL METALLIC SHEATH COMMUNICATIONS CABLES ENTERING THE BUILDING PER MANUFACTURER SPECIFICATIONS AND CEC 770-33, 800-33 AND 800-40. ALL GROUNDS SHALL CONSIST OF # 6-AWG COPPER WIRE AND SHALL BE SUPPLIED FROM AN APPROVED BUILDING GROUND AND BONDED TO THE MAIN ELECTRICAL GROUND. ALL CABLE SHEATHS AND SPLICE CASES SHALL BE GROUNDED TO A TELECOMMUNICATIONS GROUND BUS.

4. THE SCS CONTRACTOR SHALL PROVIDE GROUNDING AND BONDING FROM ALL HORIZONTAL EQUIPMENT INCLUDING DISTRIBUTION AND CROSS CONNECT FRAMES, PATCH PANELS, CABLE TRAYS, EQUIPMENT RACKS, LADDER TRAYS, CONDUITS, ACTIVE TELECOMMUNICATION EQUIPMENT, SLEEVES, TEST APPARATUS. EQUIPMENT SHALL BE BONDED TO THE TBB GROUND BARS UTILIZING A #6-AWG GREEN CONDUCTOR WITH 2-HOLE LONG BARREL COMPRESSION GROUNDING LUGS.
   a. EACH EQUIPMENT CABINET AND RACK REQUIRES ITS OWN DEDICATED RACK GROUNDING BUSBAR (RGB) WITH A BONDING CONNECTION TO THE GROUNDING INFRASTRUCTURE. THE GROUNDING INFRASTRUCTURE CONSIST OF A TB, BY PROVIDING EVERY RACK/CABINET WITH ITS OWN DEDICATED #6 WAG (MIN.) GREEN CONDUCTORS BACK TO THE TOMB/TB. ALL GROUND CONDUCTOR ATTACHMENTS SHALL UTILIZE 2-HOLE LONG BARREL COMPRESSION LUGS.
   b. HORIZONTAL CABLES SHALL BE GROUNDED IN COMPLIANCE WITH ANSI/TIA-607-C, FP 70 (EEC) AND LOCAL REQUIREMENTS AND PRACTICES.
   c. IN RAISED-FLOOR ENVIRONMENTS, THE GROUND CONDUCTOR SHALL ATTACH TO THE LOWEST HOLES ON THE FRONT RAIL OF EACH RACK/CABINET.
   d. RACK MOUNTED EQUIPMENT SHALL BE GROUNDED VIA THE CHASSIS, IN ACCORDANCE WITH MANUFACTURER'S INSTRUCTIONS.
   e. BONDING OF LADDER RACK SECTIONS: ATTACH BONDING STRAPS TO EACH LADDER RACK SECTION BY UTILIZING EITHER TWO (2) TRI-LOBULAR THREAD-FORMING SCREWS (NOT SELF-TAPPING OR SHEET METAL SCREWS) OR BY USING TWO (2) STANDARD BOLTS WITH TWO (2) "TYPE B" INTERNAL / EXTERNAL TOOTH LOCK WASHERS PER BOLT. IF THREAD-FORMING SCREWS ARE NOT USED, REMOVE PAINT AT EACH CONNECTION POINT AND USE AN APPROVED ANTI-OXIDANT PRIOR TO ATTACHING THE BONDING STRAP.

E. **TERMINAL BACKBOARDS NOTES.**

1. WHERE INDICATED ON DRAWINGS, CONTRACTOR TO PROVIDE NEW PLYWOOD TERMINAL BACKBOARDS. USE DOUGLAS FIR PLYWOOD, INTERIOR A/C GRADE, FINISHED ONE SIDE AND PRIME COAT PAINTED ON ALL SURFACES WITH A FINISH COAT OF FIRE RETARDANT WHITE ENAMEL. ON EACH PLYWOOD SHEET LEAVE ONE (1) FIRE MARSHAL STAMP UNPAINTED FOR INSPECTION. UNLESS OTHERWISE INDICATED, USE 8'-0" HIGH X LENGTH AS SHOWN ON DRAWINGS X 3/4" THICK PLYWOOD. REFERENCE BACKBOARD ELEVATIONS FOR MORE INFORMATION.

F. **PENETRATIONS OF WALLS, FLOORS AND CEILINGS NOTES.**

1. UNLESS SPECIFICALLY SHOWN ON THE DRAWINGS, THE CONTRACTOR SHALL MAKE NO PENETRATION OF FLOORS, WALLS OR CEILING WITHOUT THE PRIOR WRITTEN APPROVAL OF THE OWNERS REPRESENTATIVE.

2. WALL PENETRATIONS:
   a. THE SCS AND/OR LV CONTRACTOR SHALL PROVIDE FIRE STOPPING FOR ALL COMMUNICATIONS RATED (AND IN SOME CASES NON-RATED, THAT WILL BE DESCRIBED BELOW THIS SECTION) PATHWAYS AND SPACES. THESE FIRE STOPPING DEVICES SHALL CONFORM TO (BUT NOT LIMITED TO) UL 1479, ASTM E814, BICSI TDMM, FIRE STOPPING ANSI/TIA-568-C, STANDARD FOR INSTALLING COMMERCIAL BUILDING TELECOMMUNICATIONS CABLING, SECTION 5, CLAUSE 5.1 THROUGH 5.2.3, MANUFACTURES GUIDELINES OR OTHER PREVAILING CODE AND MUST BE AN APPROVED UL LISTED SYSTEM.
   b. CABLE TRAY FIRE-STOPPING SHALL UTILIZE THE MULTI GANG FIRE-STOPPING SYSTEM THAT WILL BE ABLE TO STACK THE UNITS HORIZONTALLY AND/OR VERTICALLY IF REQUIRED DUE TO CURRENT AND/OR FUTURE CABLING DESIGNS.
   c. THE CONTRACTOR SHALL INSTALL PENETRATION FIRE-STOP SEAL MATERIALS IN ACCORDANCE WITH DESIGN REQUIREMENTS, AND MANUFACTURER'S INSTRUCTIONS.
   d. THE CONTRACTOR'S INSTALLER SHALL BE CERTIFIED, LICENSED OR OTHERWISE QUALIFIED BY THE FIRE-STOPPING MANUFACTURER AS HAVING BEEN PROVIDED THE NECESSARY TRAINING TO INSTALL MANUFACTURER'S PRODUCTS PER SPECIFIED REQUIREMENTS.
   e. ALL THROUGH-PENETRATION SHALL BE A MANUFACTURED, UL CLASSIFIED, FIRE-STOP DEVICE / SYSTEM DESIGNED TO ALLOW CABLES TO PENETRATE FIRE-RATED WALLS WITH A BUILT-IN FIRE SEALING SYSTEM THAT AUTOMATICALLY ADJUSTS TO THE AMOUNT OF CABLES INSTALLED. THE FIRE-STOPPING DEVICE SHALL BE CAPABLE OF INSTALLATION IN NEW CONSTRUCTION OR RETROFIT IN EXISTING STRUCTURES.
   f. THE CONTRACTOR MUST NOT USE CONCRETE OR OTHER NON-REMOVABLE SUBSTANCE FOR FIRE STOPPING ON CABLE TRAYS, WIREWAYS OR CONDUITS. CONTRACTORS WHO USE THIS METHOD WILL BE REQUIRED TO REPLACE ALL CABLES AFFECTED AND PROVIDE THE ORIGINAL SPECIFIED ACCESS TO EACH EFFECTED AREA. THIS REQUIREMENT ALSO APPLIES TO MAINTAINING FIRE RATINGS OF ALL FLOORS PENETRATED BY CONDUITS OR DEVICES DESIGNATED FOR USE BY VOICE AND DATA CABLING.
   g. ANY PENETRATIONS THROUGH FIRE-RATED WALLS FOR CABLE PATHWAYS / CABLES SHALL BE SEALED BY USE OF A NON-PERMANENT FIRE BLANKET OR OTHER METHOD IN COMPLIANCE. THE CONTRACTOR MUST USE FIRE STOPPING ON CABLE TRAYS, WIREWAYS AND CONDUITS EITHER VERTICAL OR HORIZONTAL. FOUR DIFFERENT METHODS OF FIRE-STOPPING HAVE BEEN IDENTIFIED FOR THE HORIZONTAL THROUGH PENETRATIONS BETWEEN WALLS, RATED, RATED WITH ACOUSTIC PROPERTIES, NON-RATED, AND NON-RATED WITH ACOUSTIC PROPERTIES. BELOW ARE METHODS TO ACCOMPLISH THESE DIFFERENT TYPES:
      - SEALING OF RATED OPENINGS BETWEEN FLOORS OR THROUGH RATED WALLS, WHETHER EXISTING OR CREATED BY THE CONTRACTOR FOR PLACEMENT OF CABLE SHALL BE THE RESPONSIBILITY OF THE CONTRACTOR. SEALING MATERIAL AND APPLICATION SHALL BE AN APPROVED UL LISTED SYSTEM AND SHALL BE ACCOMPLISHED IN SUCH A MANNER THAT IS ACCEPTABLE TO THE LOCAL FIRE AND BUILDING AUTHORITIES HAVING JURISDICTION OVER THIS WORK. CREATION OF SUCH OPENINGS AS ARE NECESSARY FOR CABLE PASSAGE BETWEEN LOCATIONS AS SHOWN ON THE DRAWINGS SHALL BE THE RESPONSIBILITY OF THE CONTRACTOR. ANY OPENINGS CREATED BY OR FOR THE CONTRACTOR AND LEFT UNUSED SHALL ALSO BE SEALED AS PART OF THIS WORK.
      - RATED WALLS WITH THROUGH PENETRATIONS WITH ACOUSTIC PROPERTIES SHALL BE INSTALLED WITH FACTORY MANUFACTURED DEVICE. SUCH AS A STI "EZ PATH" OR WIREMOLD "FLAMESTOPPER" OR EQUAL. THE TYPICAL STC RATING IS TO BE EQUAL TO OR GREATER THAN THE WALL PENETRATED, (AVG IS A RATING OF 44 STC PER UBC RATINGS).
      - NON-RATED PATHWAY, ALTHOUGH NOT REQUIRED TO BE FIRE-STOPPED, SHALL BE A MANUFACTURED DEVICE THAT WILL ALLOW FIRE-STOPPING TO BE INSTALLED IN THE FUTURE IF REQUIRED, (I.E. WIREMOLD “FLAMESTOPPER” OR EQUAL).
      - A NON-RATED PATHWAY WITH ACOUSTIC PROPERTIES CAN BE FOUND IN AREAS SUCH AS, CONFERENCE ROOMS, HUMAN RESOURCE OFFICES, MEDICAL EXAMINATION ROOMS ETC. THESE ROOMS REQUIRE TO LIMIT THE AMOUNT OF AMBIENT NOISE THAT CAN TRAVEL FROM ONE ROOM TO THE OTHER THROUGH THE CEILING GRID. IF THIS WALL IS PENETRATED, INSTALL A SYSTEM THAT WILL RE-ESTABLISH THE STC RATING OF THE WALL, THE TYPICAL STC RATING IS AN AVERAGE OF 44 STC PER UBC RATINGS.

G. **CONTRACTOR(S) GUIDELINES.**

1. ALL TECHNOLOGY WORK SHALL COMPLY WITH DESIGN GUIDELINES AS WELL AS APPLICABLE FEDERAL, STATE, AND LOCAL CODES. WHERE THE CONSTRUCTION DOCUMENTS INDICATE MORE RESTRICTIVE REQUIREMENTS, THE DOCUMENTS SHALL GOVERN BUT THE CONSTRUCTION DOCUMENTS SHALL NOT BE INTERPRETED AS AUTHORITY TO VIOLATE ANY CODE OR REGULATION.

2. IN THE EVENT OF A CONFLICT OR INCONSISTENCY BETWEEN ITEMS INDICATED ON THE PLANS AND/OR SPECIFICATIONS OR WITH CODE REQUIREMENTS, THE NOTE, CODE OR SPECIFICATION WHICH PRESCRIBES AND ESTABLISHES THE MORE COMPLETE JOB OR THE HIGHER STANDARD SHALL PREVAIL.

3. OMISSIONS FROM THE DRAWINGS, SPECIFICATIONS OR THE MIS-DESCRIPTION OF DETAILS FROM WORK WHICH ARE CLEAR AND NECESSARY TO CARRY OUT THE INTENT OF THE DRAWINGS, SPECIFICATIONS, OR WHICH ARE CUSTOMARILY PERFORMED, SHALL NOT RELIEVE THE CONTRACTOR FROM PERFORMING SUCH OMITTED OR MIS-DESCRIBED DETAILS OF THE WORK BUT THEY SHALL BE PERFORMED AS IF FULLY AND CORRECTLY SET FORTH AND DESCRIBED IN THE DRAWINGS AND SPECIFICATIONS.

4. THE CONTRACTOR SHALL CHECK ALL DRAWINGS FURNISHED, IMMEDIATELY UPON THEIR RECEIPT AND SHALL PROMPTLY NOTIFY THE OWNER OF ANY DISCREPANCIES.

5. ALL MATERIALS AND EQUIPMENT SHALL BE NEW AND SHALL BEAR THE UNDERWRITERS LABEL (UL) AND SHALL BE INSTALLED IN THE MANNER FOR WHICH THEY ARE DESIGNED AND APPROVED.

6. THE CONTRACTOR SHALL NOT BORE, NOTCH OR IN ANY WAY CUT INTO ANY STRUCTURAL MEMBER WITHOUT WRITTEN APPROVAL FROM THE ARCHITECT OR STRUCTURAL ENGINEER.

7. ALL CHANGES TO STRUCTURES (BUILDING, DRILLING, CORING, ETC.) NOT SHOWN ON THE DRAWINGS SHALL BE APPROVED IN WRITING BY STRUCTURAL ENGINEER.

8. FOR PURPOSES OF CLEARNESS AND LEGIBILITY, THE TELECOM DRAWINGS ARE ESSENTIALLY DIAGRAMMATIC. THE SIZE AND LOCATION OF EQUIPMENT IS SHOWN TO SCALE WHEREVER POSSIBLE. THE CONTRACTOR SHALL VERIFY ALL CONDITIONS, DATA INFORMATION AS INDICATED ON THE DRAWINGS AND IN THE SPECIFICATION SECTIONS WHERE SCS AND LOW VOLTAGE WORK INTERFACES WITH OTHER TRADES.

9. THE CONTRACTOR SHALL MAINTAIN AS-BUILT DRAWINGS TO REFLECT ALL CHANGES MADE DURING CONSTRUCTION AND ANY DEVIATIONS FROM THE ELECTRICAL AND TECHNOLOGY DRAWINGS. THIS INCLUDES DEVIATIONS FROM OUTLET NUMBERS AND ANY ADDITION, DELETION OR RELOCATION OF OUTLETS SHOWN ON WORKING DRAWINGS, PATHWAY ADDITIONS, DELETIONS OR RELOCATIONS. THE CONTRACTOR SHALL AFTER COMPLETION OF JOB, PROVIDE THE OWNER AN ELECTRONIC AND HARD COPY OF AS-BUILT WORK.

10. ANY DEVIATIONS FROM PLANS OR SPECS MUST BE APPROVED IN WRITING BY THE OWNER'S REPRESENTATIVE.

11. ALL FOOTAGES ON DRAWINGS ARE ESTIMATED AND MUST BE VERIFIED BY CONTRACTOR PRIOR TO ORDERING MATERIAL.

12. ALL STATION CABLES SHALL BE NEATLY DRESSED AND SECURED EVERY FIVE FEET AT A MINIMUM.

13. THE CONTRACTOR SHALL BE RESPONSIBLE FOR REMOVAL AND REPLACEMENT OF CEILING TILE INCLUDING REPLACEMENT OF BROKEN OR DAMAGED TILES.

14. ALL LOCATIONS PASSING THROUGH A FIRE OR A SMOKE BARRIER MUST BE FIRE STOPPED USING APPROVED (UL CLASSIFIED) FIRE STOP SYSTEM, INSTALLED PER THE MANUFACTURER'S INSTRUCTIONS AND PROPERLY LABELED.

15. CONDUIT SHALL BE FILLED TO MAXIMUM CAPACITY (PER CODE, STANDARDS, AND NORMS) BEFORE UTILIZING ANOTHER VACANT CONDUIT.

16. ALL STATION OUTLETS AND TERMINALS SHALL BE PROPERLY IDENTIFIED USING THE OWNER'S STANDARD INTERNAL DISTRIBUTION NUMBERING SCHEME. ALL LABELS SHALL BE PREPRINTED OR TYPED.

17. EACH BACKBONE RISER AND/OR OSP CABLE SHALL BE EQUIPPED WITH A PERMANENT LABEL INDICATING CABLE TYPE, PAIR OR OPTIC COUNTS, DISTANT ENDS, AND CABLE LENGTH. BOTH ENDS OF EACH CABLE AND AT EVERY MAINTENANCE HOLE, HAND HOLE, AND PULL BOX, SHALL BE SO LABELED.

18. FIBER BACKBONE CABLE SHALL BE PLACED WITH 6 FOOT MAINTENANCE LOOP AT BOTH ENDS OF THE RUN. THE MAINTENANCE LOOP SHALL BE SECURED IN SUCH A MANNER TO PROVIDE PROTECTION DURING SUBSEQUENT CABLE PULLS.

19. ALL STATION CABLES/OUTLETS SHALL BE TESTED AND DOCUMENTED USING A PAIR SCANNER SPECIFICALLY DESIGNED TO TEST THE TYPE OF CABLE INSTALLED (E.G. CATEGORY 6A). TEST RESULTS SHALL BE ONE PAGE PER AND NOTED WITH THE STATION/JACK NUMBERING SCHEME THAT IS STANDARDIZED FOR THE OWNER.

20. ALL FIBER OPTIC STATION AND RISER CABLE SHALL BE TESTED END-TO-END AND THE RESULTS (LOSS IN dB) NOTED ON A SEPARATE TYPED SHEET.

21. AFTER STATION CABLE IS TESTED AND DOCUMENTED, ONE PAIR FROM EACH VOICE STATION SHALL BE CROSS CONNECTED THROUGH EACH CLOSET BACK TO THE MAIN DISTRIBUTION FRAME. TELEPHONE NUMBER ASSIGNMENTS FOR EACH JACK MUST BE APPROVED BY THE TELECOM STAFF PRIOR TO IMPLEMENTATION. A WRITTEN RECORD OF ALL CROSS CONNECT ASSIGNMENTS WILL BE PROVIDED TO THE OWNER BY THE SCS CONTRACTOR.

22. FIBER CABLES SHALL BE SPLICED TOGETHER USING A FUSION SPLICE AND PLACED IN A FIBER SPLICE CASE THAT IS RE-ENTERABLE, FULLY DRESSED AND ENCLOSED TO FIT THE NUMBER AND TYPE OF CABLES TERMINATED.

G. **TECHNOLOGY CONTRACTOR(S) GUIDELINES. (CONT.)**

23. CABLE TRAY SHALL BE PLACED IN MDF AND IDF(S) AS SHOWN ON DRAWINGS AND AS REQUIRED TO PROPERLY SECURE CABLES AND WIRE.

24. A BACKBONE CABLE ASSIGNMENT RECORD SHEET SHALL BE PREPARED (TYPED) PRIOR TO START OF ACCEPTANCE TESTING. ALL FLOOR PLANS SHALL BE NEATLY HAND NOTED WITH STATION JACK NUMBER AND CABLE LENGTH.

25. ALL CABLES SHALL BE CLEARLY LABELED WITH CABLE NUMBERS, PAIR ASSIGNMENTS AND DESIGNATION.

26. ALL CABLE TRAYS, LADDER RACKS, CONDUITS, EQUIPMENT RACKS, PROTECTOR PANELS, AND CABLE SHEATHS SHALL BE BONDED & GROUNDED TO EQUIPMENT GROUND WITH #6 WIRE (MIN.)

27. ALL SPLICES SHALL BE CONTAINED WITHIN AN APPROVED SPLICE CASE DESIGNED FOR MULTIPLE CLOSURE.

28. ALL SPLICES SHALL UTILIZE 3M 710 MODULES. ALL CABLES MUST BE EQUIPPED TO PROVIDE A CONTINUOUS BOUND OF CABLE SHIELDS THROUGH ALL SPLICES.

29. PULL ROPES SHALL BE PLACED IN ALL VACANT CONDUITS.

30. ALL WORK MUST BE COMPLETED IN A NEAT AND PROFESSIONAL MANNER. THE WORK SITE SHALL BE KEPT CLEAN AND ALL DAMAGE TO OWNER'S PROPERTY REPAIRED.

31. THE CONTRACTOR SHALL BE RESPONSIBLE FOR CONDUCTING A FINAL CLEANUP OF THE WORK SITE PRIOR TO FINAL SYSTEM ACCEPTANCE.

32. CONTRACTOR SHALL REMOVE ALL COPPER, FIBER AND COAXIAL CABLES ABANDONED IN CONDUIT, CEILINGS AND WALLS PER CEC. CABLE SHALL INCLUDE ALL INTRABUILDING, RISER SYSTEMS AND STATION CABLES FOR ALL LOW VOLTAGE/TECHNOLOGY/STRUCTURED CABLING SYSTEMS.

33. **CONTRACTOR(S) SHALL VERIFY ALL SITE CONDITIONS PRIOR TO BID.**

34. IN ACCESSIBLE CEILING SPACES;
   a. THE CONTRACTOR SHALL PROVIDE THE REQUIRED STUB UP(S) / OUT(S) AND BOXES WITH MUD-RINGS TO THE NEAREST ACCESSIBLE CEILING SPACE AND / OR NEAREST TECHNOLOGY PATHWAY INFRASTRUCTURE, REFERENCE PLANS AND SPECIFICATION FOR MORE INFORMATION.
   b. THE DESIGNATED SCS / TECHNOLOGY CONTRACTOR(S) SHALL PROVIDE A J-HOOK PATHWAY SYSTEM AND REQUIRED SLEEVES. DO NOT USE CEILING TILE WIRE HANGERS, WATER OR ELECTRICAL PIPES, OR LIGHT FIXTURES TO HANG CABLE. CABLE MUST BE A MINIMUM OF 6 INCHES ABOVE THE CEILING TILE AND MUST NOT COME WITHIN TWELVE INCHES OF A LIGHT FIXTURE.
      - THE SCS / TECHNOLOGY CONTRACTOR WILL PROVIDE THE PATHWAY REQUIRED FOR THE STRUCTURE CABLING SYSTEMS.
      - THE DESIGNATED LOW VOLTAGE / TECHNOLOGY CONTRACTOR(S) FOR EACH "SUB-SYSTEM WILL PROVIDE THE PATHWAY REQUIRED FOR THE SYSTEMS, OUTSIDE WHAT IS CONSIDERED THE STRUCTURED CABLING SYSTEM.

13. IN INACCESSIBLE AND HARDLID CEILING SPACES;
   a. THE CONTRACTOR SHALL PROVIDE ALL CONDUIT PATHWAYS, BOXES ETC. FOR A COMPLETE SYSTEM FROM THE MDF ROOM, IDF ROOM(S), IDF CABINET(S), AND ALL OTHER LOW VOLTAGE / TECHNOLOGY SYSTEMS HEADEND, CABINETS, TERMINAL CABINETS, ETC. TO THE POINT OF TERMINATION AT THE STATION END LOCATION PER PLANS AND SPECIFICATION.

TELECOM ABBREVIATIONS

ACP	ACCESS CONTROL POINT	(N)	NEW
ACS	ACCESS CONTROL SYSTEM	NC	NORMALLY CLOSED
AFF	ABOVE FINISHED FLOOR	NIC	NOT IN CONTRACT
AHJ	AUTHORITY HAVING JURISDICITON	NO	NORMALLY OPEN
AMP	AMPLIFIER	NTS	NOT TO SCALE
AOR	ARCHITECT OF RECORD	OC	ON CENTER
AUD	AUDIO	OFCI	OWNER FURNISHED, CONTRACTOR INSTALLED
AUTO	AUTOMATIC	OFOI	OWNER FURNISHED, OWNER INSTALLED
AUX	AUXILIARY	OSP	OUTSIDE PLANT
AV	AUDIOVISUAL	PB	PULL BOX
AVC	AUDIOVISUAL CONTRACTOR	PIR	PASSIVE INFRARED
AVTC	AUDIOVISUAL TERMINAL CABINET	POE	POWER OVER ETHERNET
AWG	AMERICAN WIRE GUAGE	PR	PAIR OF CONDUCTORS
BCT	BONDING CONDUCTOR FOR TELECOMMUNICATIONS CONDUIT	PTZ	PAN TILT ZOOM
C	CONDUIT	PVC	POLYVINYL CHLORIDE
CATV	COMMUNITY ANTENNA TELEVISION	PWR	POWER
CFCI	CONTRACTOR FURNISHED, CONTRACTOR INSTALLED	RCP	REFLECTED CEILING PLAN
CFOI	CONTRACTOR FURNISHED, OWNER INSTALLED	REX	REQUEST TO EXIT
CL	CENTERLINE	RFI	REQUEST FOR INFORMATION
CPU	COMPUTER	RMC	RIGID METALLIC CONDUIT
DGP	DATA GATHERING PANEL	SAD	SEE ARCHITECTURAL DRAWINGS
DIV	DIVISION	SED	SEE ELECTRICAL DRAWINGS
DMA	DOOR MANAGEMENT ALARM	SEH	SECURITY EQUIPMENT HUB
(E)	EXISTING	SM	SINGLE MODE
EC	ELECTRICAL CONTRACTOR	SMS	SECURITY MANAGEMET SYSTEM
ECS	EMERGENCY COMMUNICATION SYSTEM	SPD	SURGE PROTECTION DEVICE
EF	ENTRANCE FACILITY FOR TELECOMMUNICATION	STR	STRANDS (OF FIBER)
EMT	ELECTRIC METALLIC TUBING	STP	SHIELDED TWISTED PAIR
ER	EQUIPMENT ROOM	SY	SECURITY
EXT	EXTERIOR	TBB	TELECOMMUNICATIONS BONDING BACKBONE
(F)	FUTURE	TELCO	TELEPHONE COMPANY
FACP	FIRE ALARM CONTROL PANEL	TGB	TELECOMMUNICATIOIN GROUNDING BUSBAR
FATC	FIRE ALARM TERMINAL CABINET	TMGB	TELECOMMUNICATIOIN MAIN GROUNDING BUSBAR
FB	FLOORBOX	TR	TELECOM ROOM (IDF)
FO	FIBER OPTIC	TYP	TYPICAL
FOV	FIELD OF VIEW	UON	UNLESS OTHERWISE NOTED
GC	GENERAL CONTRACTOR	UPS	UNINTERUPTABLE POWER SUPPLY
IC	INTERCOM	UTP	UNSHIELDED TWISTED PAIR
IDF	INTERMEDIATE DISTRIBUTION FRAME	V	VOICE
IDS	INTRUSION DETECTION SYSTEM	VSS	VIDEO SURVEILLANCE SYSTEM
INT	INTERIOR	WB	WALL BOX
IP	INTERNET PROTOCOL	WP	WEATHERPROOF
IT	INFORMATION TECHNOLOGY		
JB	JUNCTION BOX		
LVC	LOW VOLTAGE CONTROLLER		
MATV	MASTER ANTENNA TELEVISION		
MDF	MAIN DISTRIBUTION FRAME		
MIC	MICROPHONE		
MM	MULTIMODE		
MPOE	MINIMUM POINT OF ENTRY		

TECHNOLOGY SHEET INDEX

SHEET NUMBER	SHEET NAME
T0.00	TECHNOLOGY ABBREVIATIONS, NOTES, AND SCHEDULES
T0.01	TECHNOLOGY SYMBOL LEGEND
T1.00	TECHNOLOGY SITE PLAN
T2.10	TECHNOLOGY FLOOR PLAN
T2.11	TECHNOLOGY ENLARGED FLOOR PLAN
T7.00	TECHNOLOGY RISER DIAGRAM
T9.00	TECHNOLOGY DETAILS
T9.01	TECHNOLOGY DETAILS
T9.02	TECHNOLOGY AV RISER DIAGRAM

IDENTIFICATION STAMP
DIV. OF THE STATE ARCHITECT
APP: 02-119490 INC:
REVIEWED FOR
SS ☑ FLS ☑ ACS ☑
DATE: 09/13/2022

LPA
ARCHITECTURE ENGINEERING INTERIORS
LANDSCAPE ARCHITECTURE PLANNING
916-287-2400 Office
916-287-2401 Fax
LPADesignStudios.com
431 I Street,
Suite 107
Sacramento, California 95814

MEP & FS / Sustainability / CxA
1209 Pleasant Grove Blvd.
Roseville, CA 95678
p 916-771-0778
CONSULTING ENGINEERS
www.lpengineers.com
Job #: 21-2018

REGISTERED PROFESSIONAL ENGINEER
No. E 16762
EXP. 9-30-22
ELECTRICAL
STATE OF CALIFORNIA

This document and all other project documents, ideas, aesthetics and designs incorporated therein are instruments of service. All project documents are copyright protected, are the property of LPA, Inc. (LPA) and cannot be lawfully used in whole or in part for any project or purpose except as set forth in the contractual agreement between LPA and its Client. The unauthorized disclosure and/or use of the project documents (including the creation of derivative works), may give rise to liability for copyright infringement, unlawful disclosure, use or misappropriation of property rights held by LPA. The unauthorized use of the project documents will give rise to the recovery of monetary losses and damages including attorney fees and costs for which the Client shall be responsible. Project documents describe the design intent of the work and are not a representation of as-built or contracted conditions. LPA is not responsible for any discrepancies between the project documents and the existing conditions.

© LPA, Inc.

DAVIS SR HIGH SCHOOL AQUATICS CENTER
315 W 14TH ST
DAVIS, CA 95616

Developed for
DAVIS JOINT UNIFIED SCHOOL DISTRICT

Revision	Date

Submittal	Date
50% DD REVIEW	06/15/2021
100% DD SUBMITTAL	07/26/2021
50% CD REVIEW	10/08/2021
100% CD REVIEW	10/22/2021
DSA SUBMITTAL	03/24/2022

Job Number	1904413
Date Published	03/24/2022
Checked By	Checker
Scale	N.T.S

TECHNOLOGY ABBREVIATIONS, NOTES, AND SCHEDULES

T0.00

EQUIPMENT ANCHORAGE NOTES

ALL MECHANICAL, PLUMBING, AND ELECTRICAL COMPONENTS SHALL BE ANCHORED AND INSTALLED PER THE DETAILS ON THE DSA APPROVED CONSTRUCTION DOCUMENTS. THE FOLLOWING COMPONENTS SHALL BE ANCHORED OR BRACED TO MEET THE FORCE AND DISPLACEMENT REQUIREMENTS PRESCRIBED IN THE 2019 CBC SECTIONS 1617A.1.18 THROUGH 1617A.1.26 AND ASCE 7-16 CHAPTERS 13, 26 AND 30.

1. ALL PERMANENT EQUIPMENT AND COMPONENTS.
2. TEMPORARY, MOVABLE OR MOBILE EQUIPMENT THAT IS PERMANENTLY ATTACHED (E.G. HARD WIRED) TO THE BUILDING UTILITY SERVICES SUCH AS ELECTRICITY, GAS OR WATER. "PERMANENTLY ATTACHED" SHALL INLUDE ALL ELECTRICAL CONNECTIONS EXCEPT PLUGS FOR 110/220 VOLT RECEPTACLES HAVING A FLEXIBLE CABLE.
3. TEMPORARY, MOVABLE OR MOBILE EQUIPMENT WHICH IS HEAVIER THAN 400 POUNDS OR HAS A CENTER OF MASS LOCATED 4 FEET OR MORE ABOVE THE ADJACENT FLOOR OR ROOF LEVEL THAT DIRECTLY SUPPORT THE COMPONENT IS REQUIRED TO BE RESTRAINED IN A MANNER APPROVED BY DSA.

THE FOLLOWING MECHANICAL AND ELECTRICAL COMPONENTS SHALL BE POSITIVELY ATTACHED TO THE STRUCTURE BUT NEED NOT DEMONSTRATE DESIGN COMPLIANCE WITH THE REFERENCES NOTED ABOVE. THESE COMPONENTS SHALL HAVE FLEXIBLE CONNECTIONS PROVIDED BETWEEN THE COMPONENT AND ASSOCIATED DUCTWORK, PIPING, AND CONDUIT. FLEXIBLE CONNECTIONS MUST ALLOW MOVEMENT IN BOTH TRANSVERSE AND LONGITUDINAL DIRECTIONS:

A. COMPONENTS WEIGHING LESS THAN 400 POUNDS AND HAVE A CENTER OF MASS LOCATED 4 FEET OR LESS ABOVE THE ADJACENT FLOOR OR ROOF LEVEL THAT DIRECTLY SUPPORT THE COMPONENT.
B. COMPONENTS WEIGHING LESS THAN 20 POUNDS, OR IN THE CASE OF DISTRIBUTED SYSTEMS, LESS THAN 5 POUNDS PER FOOT, WHICH ARE SUSPENDED FROM A ROOF OR FLOOR OR HUNG FROM A WALL.

THE ANCHORAGE OF ALL MECHANICAL, ELECTRICAL AND PLUMBING COMPONENTS SHALL BE SUBJECT TO THE APPROVAL OF THE DESIGN PROFESSIONAL IN GENERAL RESPONSIBLE CHARGE OR STRUCTURAL ENGINEER DELEGATED RESPONSIBILITY AND ACCEPTANCE BY DSA. THE PROJECT INSPECTOR WILL VERIFY THAT ALL COMPONENTS AND EQUIPMENT HAVE BEEN ANCHORED IN ACCORDANCE WITH ABOVE REQUIREMENTS.

PIPING AND DUCTWORK DISTRIBUTION SYSTEM BRACING NOTES

PIPING, DUCTWORK, AND ELECTRICAL DISTRIBUTION SYSTEMS SHALL BE BRACED TO COMPLY WITH THE FORCES AND DISPLACEMENTS PRESCRIBED IN ASCE 7-16 SECTION 13.3 AS DEFINED IN ASCE 7-16 SECTIONS 13.6.5, 13.6.6, 13.6.7, 13.6.8; AND 2019 CBC, SECTIONS 1617A.1.24, 1617A.1.25 AND 1617A.1.26.

THE METHOD OF SHOWING BRACING AND ATTACHMENTS TO THE STRUCTURE FOR THE IDENTIFIED DISTRIBUTION SYSTEM ARE AS NOTED BELOW. WHEN BRACING AND ATTACHMENTS ARE BASED ON A PRE-APPROVED INSTALLATION GUIDE (E.G., OSHPD OPM FOR 2013 CBC OR LATER), COPIES OF THE BRACING SYSTEM INSTALLATION GUIDE OR MANUAL SHALL BE AVAILABLE ON THE JOBSITE PRIOR TO THE START OF AND DURING THE HANGING AND BRACING OF THE DISTRIBUTION SYSTEMS. THE STRUCTURAL ENGINEER OF RECORD SHALL VERIFY THE ADEQUACY OF THE STRUCTURE TO SUPPORT THE HANGER AND BRACE LOADS.

MECHANICAL PIPING (MP), MECHANICAL DUCTS (MD), PLUMBING PIPING (PP), ELECTRICAL DISTRIBUTION SYSTEMS (E):

MP	MD	PP	E	
☐	☐	☐	☒	OPTION 1: DETAILED ON THE APPROVED DRAWINGS WITH PROJECT SPECIFIC NOTES AND DETAILS.
☐	☐	☐	☐	OPTION 2: SHALL COMPLY WITH THE APPLICABLE OSHPD PRE-APPROVAL (OPM#) #_____.

TECHNOLOGY SYMBOL LEGEND

ALL SYMBOLS SHOWN IN THIS LEGEND ARE NOT NECESSARILY USED ON PLANS IF NOT REQUIRED.

SYMBOL	DESCRIPTION
	TELECOM
1 ▶	TELEPHONE OUTLET, 4-11/16" SQ. x 2-1/8" DEEP BOX W/ SINGLE DEVICE RING & PLATE @ +16" TO BOTTOM OF BOX & 3/4" CONDUIT STUB UP TO ACCESSIBLE CEILING SPACE, UNO
3 ▷	DATA OUTLET, 4-11/16" SQ. x 2-1/8" DEEP BOX W/ SINGLE DEVICE RING & PLATE @ +16" TO BOTTOM OF BOX & 3/4" CONDUIT STUB UP TO ACCESSIBLE CEILING SPACE, UNO
1/3 ▶	TELE/DATA OUTLET, 4-11/16" SQ. x 2-1/8" DEEP BOX W/ SINGLE DEVICE RING & PLATE @ +16" TO BOTTOM OF BOX & (2) 3/4" CONDUIT STUB UP TO ACCESSIBLE CLG SPACE, UNO
1/3 ▶ A	TELE/DATA OUTLET, 4-11/16" SQ. x 2-1/8" DEEP BOX W/ SINGLE DEVICE RING & PLATE ABOVE COUNTER AND (2) 3/4" CONDUIT STUB UP TO ACCESSIBLE CEILING SPACE, UNO
2	FLOOR MOUNTED DATA OUTLET, FLUSH IN FINISHED FLOOR - SIZE PER PLAN
1	FLOOR MOUNTED TELEPHONE OUTLET, FLUSH IN FINISHED FLOOR - SIZE PER PLAN
1/3	FLOOR MOUNTED TELEPHONE/DATA OUTLET, FLUSH IN FINISHED FLOOR - SIZE PER PLAN
2	CEILING MOUNTED DATA OUTLET, 4" SQ. BOX WITH SINGLE DEVICE RING & PLATE
	NUMBER BY DEVICE SYMBOL PARENTHESIS INDICATES NUMBER OF REQUIRED ACTIVE JACKS FOR VOICE/DATA OUTLETS. THE FIRST NUMBER REPRESENTS THE # OF VOICE PORTS AND THE SECOND NUMBER REPRESENTS THE # OF DATA PORTS.
TV1 ▷	DATA OUTLET FOR TV, 4-11/16" SQ. x 2-1/8" DEEP BOX W/ SINGLE DEVICE RING & PLATE @ +16" TO BOTTOM OF BOX & 3/4" CONDUIT STUB UP TO ACCESSIBLE CEILING SPACE, UNO
WAP	WIRELESS ACCESS POINT, 4" SQ. BOX W/ 1 GANG RING FOR INDOOR LOCATIONS
	TELEPHONE TERMINAL BACKBOARD
TV	COAXIAL CABLE OUTLET
	CLOCK, COORDINATE SIZE OF BACKBOX AND CONDUIT W/ MANUFACTURERS RECOMMENDATIONS
	INTERCOM SPEAKER AND CLOCK COMBINATION, 4" SQ. x 2-1/8" DEPTH BOX W/ 2 GANG RING 3/4" CONDUIT STUB UP TO ACCESSIBLE CEILING SPACE
S	CEILING MOUNTED AV SPEAKER, COORDINATE SIZE OF BACKBOX AND CONDUIT W/ MANUFACTURERS RECOMMENDATIONS
S	WALL MOUNTED AV SPEAKER, COORDINATE SIZE OF BACKBOX AND CONDUIT W/ MANUFACTURERS RECOMMENDATIONS
S	CEILING MOUNTED INTERCOM SPEAKER, COORDINATE SIZE OF BACKBOX AND CONDUIT W/ MANUFACTURERS RECOMENDATIONS
S	WALL MOUNTED INTERCOM SPEAKER, COORDINATE SIZE OF BACKBOX AND CONDUIT W/ MANUFACTURERS RECOMENDATIONS
EH	EMERGENCY HELP BUTTON
AV	AV CABLE FACEPLATE AT 4" ABOVE BOTTOM OF TV SCREEN, CABLES RUN TO FACEPLATE SYMBOLIZED BY "HD" DESIGNATORY
CP	AV CONTROL PANEL
HD	AV CABLE FACEPLATE AT 18" A.F.F. U.N.O.
	SURVEILLANCE CAMERAS
	360 DEGREE CAMERA, 4" SQ. x 2-1/8" DEPTH BOX W/ 1 GANG RING 3/4" CONDUIT STUB UP TO ACCESSIBLE CEILING SPACE FOR INDOOR LOCATIONS
	FIXED POSITION CAMERA, 4" SQ. x 2-1/8" DEPTH BOX W/ 1 GANG RING 3/4" CONDUIT STUB UP TO ACCESSIBLE CEILING SPACE FOR INDOOR LOCATIONS. PROVIDE INFRASTRUCTURE ONLY.
WP	WEATHERPROOF FIXED POSITION CAMERA, 4" SQ. x 2-1/8" DEPTH BOX W/ 1 GANG RING 3/4" CONDUIT STUB UP TO ACCESSIBLE CEILING SPACE FOR INDOOR LOCATIONS
	ACCESS CONTROL
CR	CARD READER, 4" SQ. x 2-1/8" DEPTH BOX W/ 1 GANG RING AT READER - 1/2" CONDUIT CHASE STUB TO CEILING - TO LOCAL RELAY. INFRASTRUCTURE ONLY.
EL	ELECTRONIC LOCK INFRASTRUCTURE ONLY.
	INTRUSION ALARM
KP	KEYPAD, 4" SQ. x 2-1/8" DEPTH BOX W/ 1 GANG RING - 3/4" CONDUIT CHASE STUB TO CEILING - TO LOCAL RELAY. INFRASTRUCTURE ONLY
	WALL/CEILING MOUNTED FIXED POSITION INTRUSION SENSOR, 4" SQ. x 2-1/8" DEPTH BOX W/ 1 GANG RING - 3/4" CONDUIT CHASE STUB TO CEILING - TO LOCAL RELAY
I	CEILING MOUNTED 360 DEGREES INTRUSION SENSOR
	DOOR CONTACT, PATHWAY SHALL INCLUDE 4" SQ. J-BOX WITH A DOUBLE GANG DEVICE RING ABOVE THE DOOR FOR WIRING MAKE UP AND MONITORING DEVICE PLACEMENT AT MAXIMUM HEIGHT OF 120" AFF. CONTRACTOR TO PROVIDE INFRASTRUCTURE ONLY.
G	GLASS BREAK
P	POPPIT
	NURSE CALL
DL	DOME LIGHT MOUNTED OVER DOOR. PROVIDE 4-11/16" BACK BOX WITH 2 GANG RING AND STUB 3/4" CONDUIT ONLY WITH PULL ROPE UP TO ACCESSIBLE CEILING SPACE.
M	MINI MASTER STATION. PROVIDE 4" SQUARE BACK BOX WITH 1 GANG RING.
PC	EMERGENCY PULL CORD STATION WALL MOUNTED AT +48". PROVIDE 4" SQUARE BACK BOX WITH 1 GANG RING AND STUB 1/2" CONDUIT ONLY WITH PULL ROPE UP TO ACCESSIBLE CEILING SPACE.
NB	EMERGENCY PUSH BUTTON - STAFF EMERGENCY WALL MOUNTED AT +48". PROVIDE 4" SQUARE BACK BOX WITH 1 GANG RING AND STUB 1/2" CONDUIT ONLY WITH PULL ROPE UP TO ACCESSIBLE CEILING SPACE.
CB	EMERGENCY PUSH BUTTON - STAFF EMERGENCY/CODE BLUE WALL MOUNTED AT +48". PROVIDE 4" SQUARE BACK BOX WITH 1 GANG RING AND STUB 1/2" CONDUIT ONLY WITH PULL ROPE UP TO ACCESSIBLE CEILING SPACE.
PS	SINGLE BED PATIENT STATION w/ CODE BLUE AND STAFF EMERGENCY WALL MOUNTED AT +48". PROVIDE 4 GANG BACK BOX (RACO #698 OR SIMILAR) AND STUB 3/4" CONDUIT ONLY WITH PULL ROPE UP TO ACCESSIBLE CEILING SPACE.
NCTC	NURSE CALL CONTROLLER AND TERMINAL CABINET (36"x24"x6" METAL BOX WITH LOUVERED DOOR) BY OTHERS. PROVIDE 120V, 20A CIRCUIT PER ELECTRICAL PLANS.
PSTC	POWER SUPPLY TERMINAL CAN (18"x22"x6" METAL BOX WITH LOUVERED DOOR) BY OTHERS. PROVIDE 120V, 20A CIRCUIT PER ELECTRICAL PLANS.

NOTES:
1. REFERENCE AUDIO VISUAL SPECIFICATIONS AND MANUFACTURER GUIDELINES WHEN DETERMINING BACK BOX SIZE FOR AV EQUIPMENT.
2. USE EXTENSION RINGS IF NEEDED, ON ALL LOCATIONS.
3. REFERENCE EIA/TIA STANDARDS.

IDENTIFICATION STAMP
DIV. OF THE STATE ARCHITECT
APP: 02-119490 INC:
REVIEWED FOR
SS ☑ FLS ☑ ACS ☑
DATE: 09/13/2022

LPA
ARCHITECTURE ENGINEERING INTERIORS
LANDSCAPE ARCHITECTURE PLANNING

916-287-2400 Office
916-287-2401 Fax
LPADesignStudios.com
431 I Street,
Suite 107
Sacramento, California 95814

MEP & FS / Sustainability / CxA
CONSULTING ENGINEERS
1209 Pleasant Grove Blvd.
Roseville, CA 95678
p 916-771-0778
www.lpengineers.com
Job #: 21-2018

REGISTERED PROFESSIONAL ENGINEER
RAMI S. ZEID
No. E 16762
EXP. 9-30-22
ELECTRICAL
STATE OF CALIFORNIA

This document and all other project documents, ideas, aesthetics and designs incorporated therein are instruments of service. All project documents are copyright protected, are the property of LPA, Inc. (LPA) and cannot be lawfully used in whole or in part for any project or purpose except as set forth in the contractual agreement between LPA and its Client. The unauthorized disclosure and/or use of the project documents (including the creation of derivative works), may give rise to liability for copyright infringement, unlawful disclosure, use or misappropriation of property rights held by LPA. The unauthorized use of the project documents will give rise to the recovery of monetary losses and damages including attorney fees and costs for which the unauthorized user will be held liable.
Project documents describe the design intent of the work and are not a representation of as-built or existing conditions. LPA is not responsible for any discrepancies between the project documents and the existing conditions.

© LPA, Inc.

DAVIS SR HIGH SCHOOL
AQUATICS CENTER
315 W 14TH ST
DAVIS, CA 95616

Developed for
DAVIS JOINT UNIFIED SCHOOL DISTRICT

Revision	Date

Submittal	Date
50% DD REVIEW	06/15/2021
100% DD SUBMITTAL	07/26/2021
50% CD REVIEW	10/08/2021
100% CD REVIEW	10/22/2021
DSA SUBMITTAL	02/24/2022

Job Number	1904413
Date Published	03/24/2022
Checked By	Checker
Scale	As indicated

TECHNOLOGY
SYMBOL LEGEND

T0.01

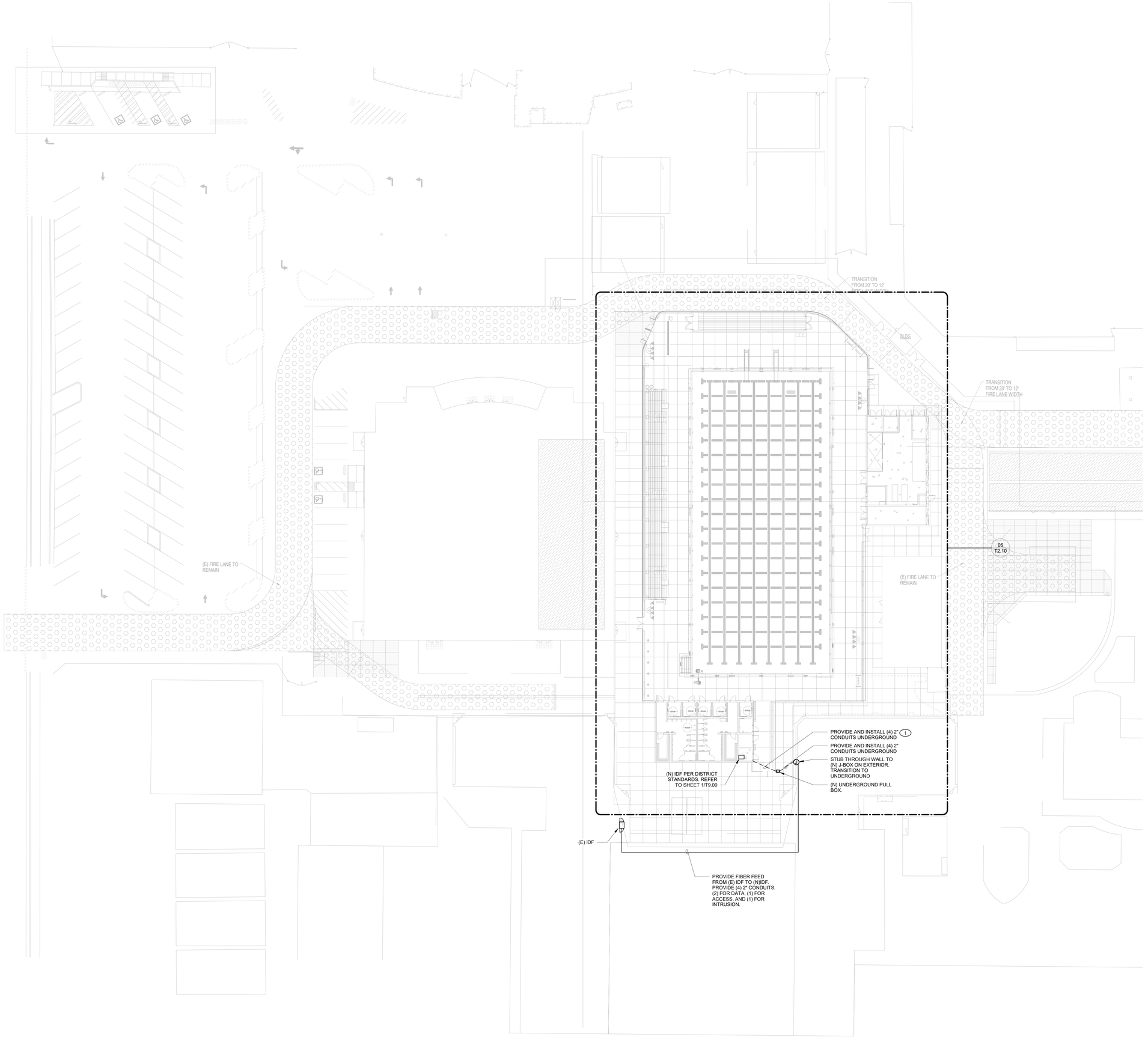

TECHNOLOGY FLOOR PLAN | 1" = 20'-0" | 01

GENERAL NOTES

A. FIELD VERIFY EXISTING CONDITION AND NOTIFY ARCHITECT AND ENGINEER OF ANY CONFLICTS OR DISCREPANCIES.

B. COORDINATE ALL NEW CABLE LABELING, TERMINATIONS, AND TESTING WITH DISTRICT IT REPRESENTATIVE.

C. SEE CONDUIT FILL CHART (1/T0.01), DO NOT EXCEED 40% FILL

D. REFERENCE SPECIFICATION FOR PRODUCT PREFERENCE AND COLOR AND WARRANTY REQUIREMENTS.

E. PROVIDE SPARE PATCH PANEL IF NUMBER OF AVAILABLE PORTS IS LESS THAN 8 PORTS.

F. VERIFY EXACT LOCATIONS PRIOR TO CONSTRUCTION.

G. PROVIDE 20' SERVICE LOOP IN ALL VAULTS

H. PROVIDE 25' SLACK AT EACH END

I. ALL EXPOSED CONDUITS SHALL BE PRIMED WHITE AND PAINTED TO MATCH SURROUNDING AREA.

J. COORDINATE CONDUIT PATHWAY WITH FACILITIES

K. COORDINATE ALL WIRELESS LOCATIONS WITH CAMPUS IT.

L. PROVIDE (2) CAT6A TO EACH WAP LOCATION, TERMINATE AND TEST ALL NEW CABLES AND OBSERVE CAMPUS LABELING FORMAT.

M. CAT6A CABLE RUNS NOT TO EXCEED 300FT. IF CABLING RUNS EXCEED 300FT. NOTIFY CAMPUS IT IMMEDIATELY PRIOR TO PULLING CABLE.

N. PROVIDE CLOCK AND BELL LOCATIONS PER SCHOOL DISTRICT STANDARDS.

O. HOME RUN CABLING TO LOCAL IDF.

P. ALL EXISTING EQUIPMENT, DEVICES, CONDUIT AND WIRING, ETC., WHERE SHOWN ON PLANS ARE BASED ON AVAILABLE EXISTING DOCUMENTS AND LIMITED SITE SURVEYS AND ARE SHOWN FOR CLARITY. IT SHALL BE REGARDED AS AN APPROXIMATION ONLY. CONSTRUCTION CONTRACTOR AGREES THAT IN ACCORDANCE WITH GENERALLY ACCEPTED CONSTRUCTION PRACTICES, THE CONTRACTOR WILL BE REQUIRED TO ASSUME SOLE AND COMPLETE RESPONSIBILITY FOR JOB SITE CONDITIONS DURING THE COURSE OF CONSTRUCTION OF THE PROJECT. PRIOR TO SUBMITTING BID AND BEFORE START OF ANY ELECTRICAL WORK, CONTRACTOR SHALL VERIFY ON-SITE ALL EXISTING LOCATIONS AND CONDITIONS TO ASCERTAIN ALL WORK REQUIRED.

Q. ALL OUTDOOR DEVICE LOCATONS MUST BE INSTALLED TO PROTECT WATER RETENTION BARRIER OF BUILDING. OBSERVE ALL OUTDOOR RATED INSTALLATION PRACTICES. USE WEATHER TIGHT CONDUIT TO PREVENT LEAKS.

R. WHERE EXISTING WIRING OR EQUIPMENT IS ABANDONED AS A RESULT OF THIS CONTRACT, IT SHALL BE REMOVED INSOFAR AS POSSIBLE. THIS INCLUDES BUT IS NOT LIMITED TO:
   a. REMOVE ALL WIRE AND CABLE.
   b. REMOVE ALL DEVICES AND EQUIPMENT.
   c. REMOVE ALL EXPOSED CONDUIT AND CONDUIT IN ACCESSIBLE CONCEALED AREA, AS FAR AS POSSIBLE.
   d. CUT OFF AND CAP ALL ABANDONED CONDUIT. STUBS SHALL NOT BE PROTRUDED ABOVE FLOOR AND/OR FINISHED WALLS AND CEILINGS.

KEY NOTES

1 (4) 2" SHOWN ON SITE PLAN AND (5) 2" SHOWN ON FLOOR PLAN. TOTAL OF (9) (N) 2" CONDUITS UNDERGROUND BETWEEN (N) IDF AND (N) PULLBOX.

IDENTIFICATION STAMP
DIV. OF THE STATE ARCHITECT
APP: 02-119490 INC:
REVIEWED FOR
SS ☑ FLS ☑ ACS ☑
DATE: 09/13/2022

LPA

ARCHITECTURE ENGINEERING INTERIORS
LANDSCAPE ARCHITECTURE PLANNING

916-287-2400 Office
916-287-2401 Fax
LPADesignStudios.com
431 I Street,
Suite 107
Sacramento, California 95814

MEP & FS / Sustainability / CxA
1209 Pleasant Grove Blvd.
Roseville, CA 95678
p 916-771-0778
CONSULTING ENGINEERS
www.lpengineers.com
Job #: 21-2018

REGISTERED PROFESSIONAL ENGINEER
RAMI S. ZEID
No. E 16762
EXP. 9-30-22
ELECTRICAL
STATE OF CALIFORNIA

This document and all other project documents, ideas, aesthetics and designs incorporated therein are instruments of service. All project documents are copyright protected, are the property of LPA, Inc. (LPA) and cannot be lawfully used in whole or in part for any project or purpose except as set forth in the contractual agreement between LPA and its Client. The unauthorized disclosure and/or use of the project documents (including the creation of derivative works), may give rise to liability for copyright infringement, unlawful disclosure, use or misappropriation of property rights held by LPA. The unauthorized use of the project documents will give rise to the recovery of monetary losses and damages including attorney fees and costs for which the unauthorized user will be held liable.
Project documents describe the design intent of the work and are not a representation of as-built or existing conditions. LPA is not responsible for any discrepancies between the project documents and the existing conditions.

© LPA, Inc.

DAVIS SR HIGH SCHOOL
AQUATICS CENTER
315 W 14TH ST
DAVIS, CA 95616

Developed for
DAVIS JOINT UNIFIED SCHOOL DISTRICT

Revision	Date

Submittal	Date
50% DD REVIEW	06/15/2021
100% DD SUBMITTAL	07/26/2021
50% CD REVIEW	10/08/2021
100% CD REVIEW	10/22/2021
DSA SUBMITTAL	03/24/2022

Job Number	1904413
Date Published	03/24/2022
Checked By	Checker
Scale	As indicated

TECHNOLOGY SITE PLAN

T1.00

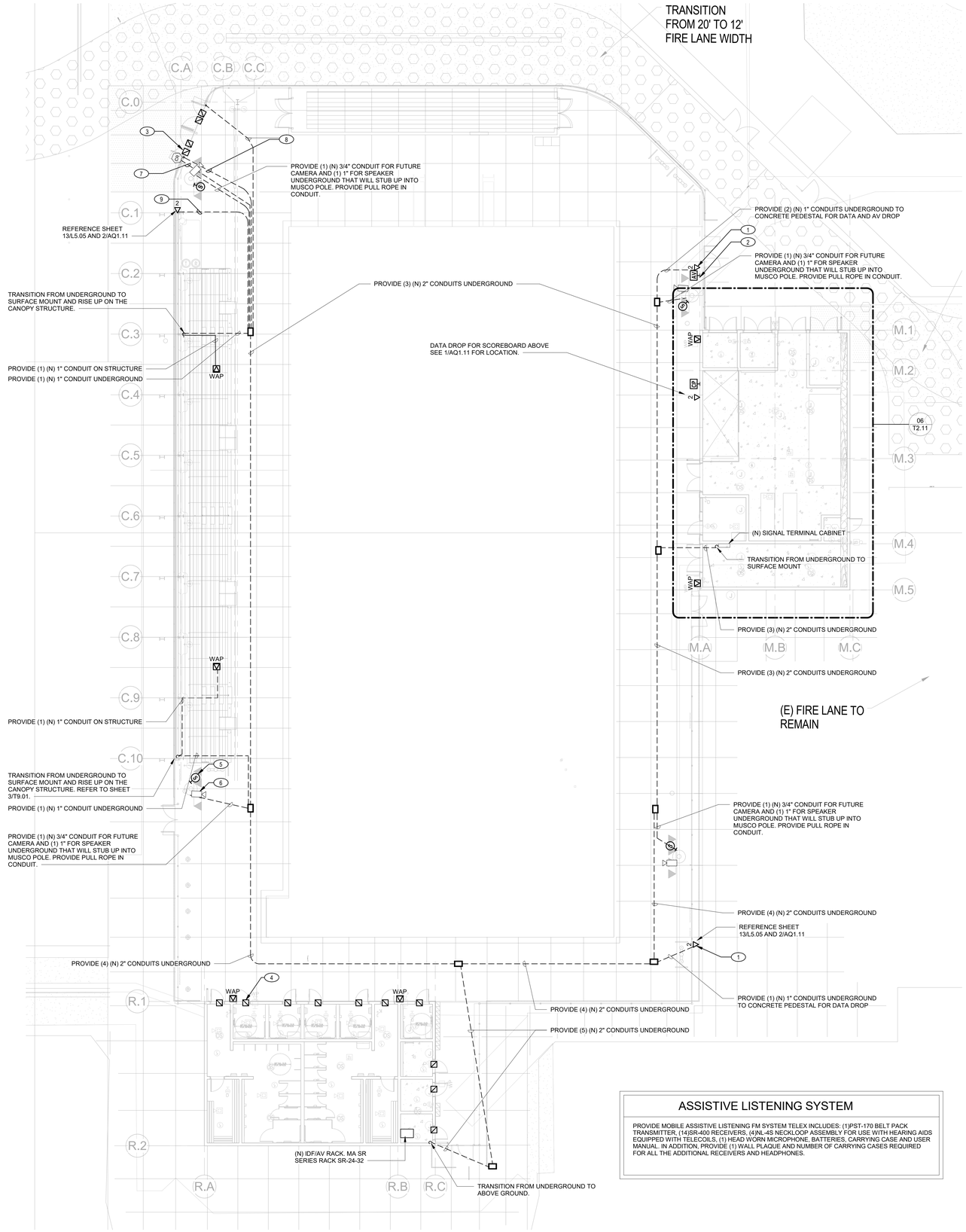

ASSISTIVE LISTENING SYSTEM

PROVIDE MOBILE ASSISTIVE LISTENING FM SYSTEM TELEX INCLUDES: (1)PST-170 BELT PACK TRANSMITTER, (14)SR-400 RECEIVERS, (4)NL-4S NECKLOOP ASSEMBLY FOR USE WITH HEARING AIDS EQUIPPED WITH TELECOILS, (1) HEAD WORN MICROPHONE, BATTERIES, CARRYING CASE AND USER MANUAL. IN ADDITION, PROVIDE (1) WALL PLAQUE AND NUMBER OF CARRYING CASES REQUIRED FOR ALL THE ADDITIONAL RECEIVERS AND HEADPHONES.

TECHNOLOGY FLOOR PLAN | 3/32" = 1'-0" | 05

GENERAL NOTES

A. FIELD VERIFY EXISTING CONDITION AND NOTIFY ARCHITECT AND ENGINEER OF ANY CONFLICTS OR DISCREPANCIES.

B. COORDINATE ALL NEW CABLE LABELING, TERMINATIONS, AND TESTING WITH DISTRICT IT REPRESENTATIVE.

C. SEE CONDUIT FILL CHART (1/T0.01), DO NOT EXCEED 40% FILL

D. REFERENCE SPECIFICATION FOR PRODUCT PREFERENCE AND COLOR AND WARRANTY REQUIREMENTS.

E. PROVIDE SPARE PATCH PANEL IF NUMBER OF AVAILABLE PORTS IS LESS THAN 8 PORTS.

F. VERIFY EXACT LOCATIONS PRIOR TO CONSTRUCTION.

G. PROVIDE 20' SERVICE LOOP IN ALL VAULTS

H. PROVIDE 25' SLACK AT EACH END

I. ALL EXPOSED CONDUITS SHALL BE PRIMED WHITE AND PAINTED TO MATCH SURROUNDING AREA.

J. COORDINATE CONDUIT PATHWAY WITH FACILITIES

K. COORDINATE ALL WIRELESS LOCATIONS WITH CAMPUS IT.

L. PROVIDE (2) CAT6A TO EACH WAP LOCATION, TERMINATE AND TEST ALL NEW CABLES AND OBSERVE CAMPUS LABELING FORMAT.

M. CAT6A CABLE RUNS NOT TO EXCEED 300FT. IF CABLING RUNS EXCEED 300FT. NOTIFY CAMPUS IT IMMEDIATELY PRIOR TO PULLING CABLE.

N. PROVIDE CLOCK AND BELL LOCATIONS PER SCHOOL DISTRICT STANDARDS.

O. HOME RUN CABLING TO LOCAL IDF.

P. ALL EXISTING EQUIPMENT, DEVICES, CONDUIT AND WIRING, ETC., WHERE SHOWN ON PLANS ARE BASED ON AVAILABLE EXISTING DOCUMENTS AND LIMITED SITE SURVEYS AND ARE SHOWN FOR CLARITY. IT SHALL BE REGARDED AS AN APPROXIMATION ONLY. CONSTRUCTION CONTRACTOR AGREES THAT IN ACCORDANCE WITH GENERALLY ACCEPTED CONSTRUCTION PRACTICES, THE CONTRACTOR WILL BE REQUIRED TO ASSUME SOLE AND COMPLETE RESPONSIBILITY FOR JOB SITE CONDITIONS DURING THE COURSE OF CONSTRUCTION OF THE PROJECT. PRIOR TO SUBMITTING BID AND BEFORE START OF ANY ELECTRICAL WORK, CONTRACTOR SHALL VERIFY ON-SITE ALL EXISTING LOCATIONS AND CONDITIONS TO ASCERTAIN ALL WORK REQUIRED.

Q. ALL OUTDOOR DEVICE LOCATONS MUST BE INSTALLED TO PROTECT WATER RETENTION BARRIER OF BUILDING. OBSERVE ALL OUTDOOR RATED INSTALLATION PRACTICES. USE WEATHER TIGHT CONDUIT TO PREVENT LEAKS.

R. WHERE EXISTING WIRING OR EQUIPMENT IS ABANDONED AS A RESULT OF THIS CONTRACT, IT SHALL BE REMOVED INSOFAR AS POSSIBLE. THIS INCLUDES BUT IS NOT LIMITED TO:
   a. REMOVE ALL WIRE AND CABLE.
   b. REMOVE ALL DEVICES AND EQUIPMENT.
   c. REMOVE ALL EXPOSED CONDUIT AND CONDUIT IN ACCESSIBLE CONCEALED AREA, AS FAR AS POSSIBLE.
   d. CUT OFF AND CAP ALL ABANDONED CONDUIT. STUBS SHALL NOT BE PROTRUDED ABOVE FLOOR AND/OR FINISHED WALLS AND CEILINGS.

KEY NOTES

1 PROVIDE DATA DROP IN THE CONCRETE PEDESTAL.
2 PROVIDE AV DROP IN THE CONCRETE PEDESTAL.
3 (TYPICAL) FUTURE DOOR CONTACTS. CONTRACTOR TO PROVIDE INFRASTRUCTURE ONLY. MINIMUM 3/4" CONDUIT WITH PULL ROPE INTO THE VERTICAL POST OF THE GATE. ALSO PROVIDE 1/2" CONDUIT FOR ELECTRONIC LOCK. REFER TO LANDSCAPE SHEET FOR HEIGHT INFORMATION. CABLE WILL RUN INSIDE THE POST FOR BOTH FUTURE DOOR CONTACT AND ELECTRONIC LOCK.
4 (TYPICAL) FUTURE DOOR CONTACTS. CONTRACTOR TO PROVIDE INFRASTRUCTURE ONLY. MINIMUM 1/2" CONDUIT WITH PULL ROPE INTO TOP OF DOOR FRAME. CONDUIT SHALL NOT RUN HORIZONTALLY IN CMU.
5 (TYPICAL) SPEAKERS ARE TO BE MOUNTED AT 20' AFF ON MUSCO LIGHT POLES.
6 (TYPICAL) CAMERA INFRASTRUCTURE IS TO BE MOUNTED AT 15' ON MUSCO LIGHT POLES.
7 PROVIDE (1) 1" CONDUIT FOR FUTURE CARD READER.
8 PROVIDE (1) 3/4" CONDUIT FOR FUTURE DOOR CONTACTS AND (1) 1/2" CONDUIT FOR FUTURE ELECTRONIC LOCK.
9 PROVIDE (1) 3/4" CONDUIT

IDENTIFICATION STAMP
DIV. OF THE STATE ARCHITECT
APP: 02-119490 INC:
REVIEWED FOR
SS ☑ FLS ☑ ACS ☑
DATE: 09/13/2022

LPA
ARCHITECTURE ENGINEERING INTERIORS
LANDSCAPE ARCHITECTURE PLANNING
916-287-2400 Office
916-287-2401 Fax
LPADesignStudios.com
431 I Street,
Suite 107
Sacramento, California 95814

MEP & FS / Sustainability / CxA
1209 Pleasant Grove Blvd.
Roseville, CA 95678
p 916-771-0778
CONSULTING ENGINEERS
www.lpengineers.com
Job #: 21-2018

REGISTERED PROFESSIONAL ENGINEER
RAMI S. ZEID
No. E 16762
EXP. 9-30-22
ELECTRICAL
STATE OF CALIFORNIA

This document and all other project documents, ideas, aesthetics and designs incorporated therein are instruments of service. All project documents are copyright protected, are the property of LPA, Inc. (LPA) and cannot be lawfully used in whole or in part for any project or purpose except as set forth in the contractual agreement between LPA and its Client. The unauthorized disclosure and/or use of the project documents (including the creation of derivative works), may give rise to liability for copyright infringement, unlawful disclosure, use or misappropriation of property rights held by LPA. The unauthorized use of the project documents will give rise to the recovery of monetary losses and damages including attorney fees and costs for which the unauthorized user will be held liable. Project documents describe the design intent of the work and are not a representation of as-built or existing conditions. LPA is not responsible for any discrepancies between the project documents and the existing conditions.

© LPA, Inc.

DAVIS SR HIGH SCHOOL
AQUATICS CENTER
315 W 14TH ST
DAVIS, CA 95616

Developed for
DAVIS JOINT UNIFIED SCHOOL DISTRICT

Revision	Date

Submittal	Date
50% DD REVIEW	06/15/2021
100% DD SUBMITTAL	07/26/2021
50% CD REVIEW	10/08/2021
100% CD REVIEW	10/22/2021
DSA SUBMITTAL	03/24/2022

Job Number	1904413
Date Published	03/24/2022
Checked By	MH
Scale	As indicated

TECHNOLOGY FLOOR PLAN

T2.10

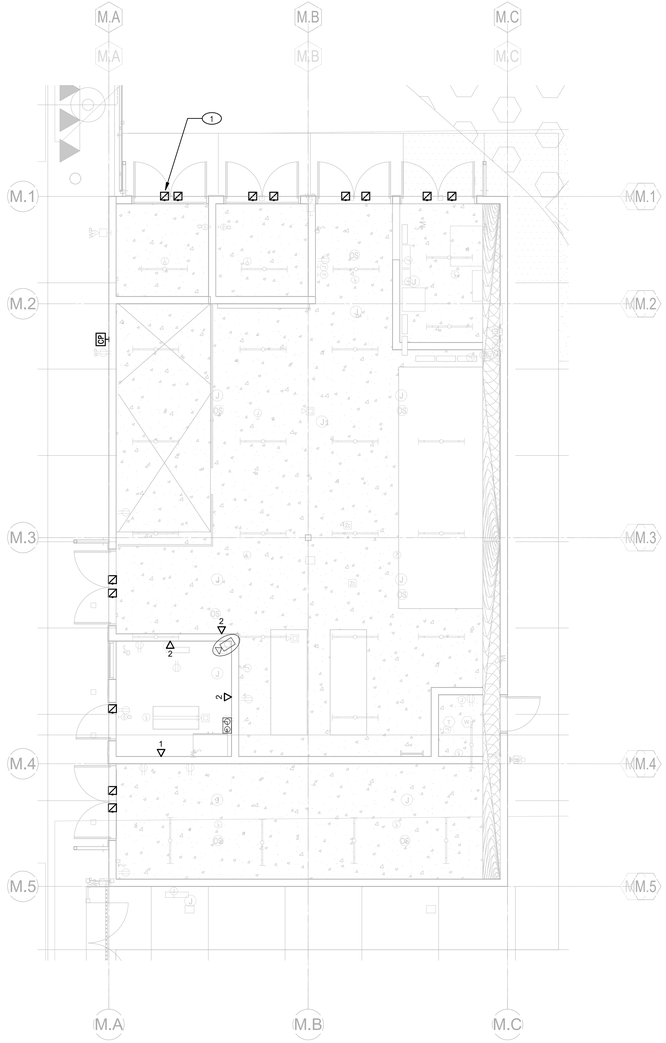

TECHNOLOGY ENLARGED FLOOR PLAN | 3/16" = 1'-0" | 06

GENERAL NOTES

A. FIELD VERIFY EXISTING CONDITION AND NOTIFY ARCHITECT AND ENGINEER OF ANY CONFLICTS OR DISCREPANCIES.

B. COORDINATE ALL NEW CABLE LABELING, TERMINATIONS, AND TESTING WITH DISTRICT IT REPRESENTATIVE.

C. SEE CONDUIT FILL CHART (1/T0.01), DO NOT EXCEED 40% FILL

D. REFERENCE SPECIFICATION FOR PRODUCT PREFERENCE AND COLOR AND WARRANTY REQUIREMENTS.

E. PROVIDE SPARE PATCH PANEL IF NUMBER OF AVAILABLE PORTS IS LESS THAN 8 PORTS.

F. VERIFY EXACT LOCATIONS PRIOR TO CONSTRUCTION.

G. COORDINATE CONDUIT PATHWAY WITH FACILITIES

H. COORDINATE ALL WIRELESS LOCATIONS WITH CAMPUS IT.

I. PROVIDE (2) CAT6A TO EACH WAP LOCATION, TERMINATE AND TEST ALL NEW CABLES AND OBSERVE CAMPUS LABELING FORMAT.

J. CAT6A CABLE RUNS NOT TO EXCEED 300FT. IF CABLING RUNS EXCEED 300FT. NOTIFY CAMPUS IT IMMEDIATELY PRIOR TO PULLING CABLE.

K. PROVIDE CLOCK AND BELL LOCATIONS PER SCHOOL DISTRICT STANDARDS.

L. HOME RUN CABLING TO LOCAL IDF.

M. ALL EXISTING EQUIPMENT, DEVICES, CONDUIT AND WIRING, ETC., WHERE SHOWN ON PLANS ARE BASED ON AVAILABLE EXISTING DOCUMENTS AND LIMITED SITE SURVEYS AND ARE SHOWN FOR CLARITY. IT SHALL BE REGARDED AS AN APPROXIMATION ONLY. CONSTRUCTION CONTRACTOR AGREES THAT IN ACCORDANCE WITH GENERALLY ACCEPTED CONSTRUCTION PRACTICES, THE CONTRACTOR WILL BE REQUIRED TO ASSUME SOLE AND COMPLETE RESPONSIBILITY FOR JOB SITE CONDITIONS DURING THE COURSE OF CONSTRUCTION OF THE PROJECT. PRIOR TO SUBMITTING BID AND BEFORE START OF ANY ELECTRICAL WORK, CONTRACTOR SHALL VERIFY ON-SITE ALL EXISTING LOCATIONS AND CONDITIONS TO ASCERTAIN ALL WORK REQUIRED.

N. WHERE EXISTING WIRING OR EQUIPMENT IS ABANDONED AS A RESULT OF THIS CONTRACT, IT SHALL BE REMOVED INSOFAR AS POSSIBLE. THIS INCLUDES BUT IS NOT LIMITED TO:
   a. REMOVE ALL WIRE AND CABLE.
   b. REMOVE ALL DEVICES AND EQUIPMENT.
   c. REMOVE ALL EXPOSED CONDUIT AND CONDUIT IN ACCESSIBLE CONCEALED AREA, AS FAR AS POSSIBLE.
   d. CUT OFF AND CAP ALL ABANDONED CONDUIT. STUBS SHALL NOT BE PROTRUDED ABOVE FLOOR AND/OR FINISHED WALLS AND CEILINGS.

KEY NOTES

1 (TYPICAL) FUTURE DOOR CONTACTS. CONTRACTOR TO PROVIDE INFRASTRUCTURE ONLY. MINIMUM 1/2" CONDUIT WITH PULL ROPE INTO TOP OF DOOR FRAME. CONDUIT SHALL NOT RUN HORIZONTALLY IN CMU.

IDENTIFICATION STAMP
DIV. OF THE STATE ARCHITECT
APP: 02-119490 INC:
REVIEWED FOR
SS ☑ FLS ☑ ACS ☑
DATE: 09/13/2022

LPA
ARCHITECTURE ENGINEERING INTERIORS
LANDSCAPE ARCHITECTURE PLANNING

916-287-2400 Office
916-287-2401 Fax
LPADesignStudios.com
431 I Street,
Suite 107
Sacramento, California 95814

MEP & FS / Sustainability / CxA
CONSULTING ENGINEERS
1209 Pleasant Grove Blvd.
Roseville, CA 95678
p 916-771-0778
www.lpengineers.com
Job #: 21-2018

REGISTERED PROFESSIONAL ENGINEER
RAMI S. ZEID
No. E 16762
EXP. 9-30-22
ELECTRICAL
STATE OF CALIFORNIA

This document and all other project documents, ideas, aesthetics and designs incorporated therein are instruments of service. All project documents are copyright protected, are the property of LPA, Inc. (LPA) and cannot be lawfully used in whole or in part for any project or purpose except as set forth in the contractual agreement between LPA and its Client. The unauthorized disclosure and/or use of the project documents (including the creation of derivative works), may give rise to liability for copyright infringement, unlawful disclosure, use or misappropriation of property rights held by LPA. The unauthorized use of the project documents will give rise to the recovery of monetary losses and damages including attorney fees and costs for which the unauthorized user will be held liable.
Project documents describe the design intent of the work and are not a representation of as-built or existing conditions. LPA is not responsible for any discrepancies between the project documents and the existing conditions.

© LPA, Inc.

DAVIS SR HIGH SCHOOL
AQUATICS CENTER
315 W 14TH ST
DAVIS, CA 95616

Developed for
DAVIS JOINT UNIFIED SCHOOL DISTRICT

Revision	Date

Submittal	Date
50% DD REVIEW	06/15/2021
100% DD SUBMITTAL	07/26/2021
50% CD REVIEW	10/08/2021
100% CD REVIEW	10/22/2021
DSA SUBMITTAL	03/24/2022

Job Number	1904413
Date Published	03/24/2022
Checked By	Checker
Scale	As indicated

TECHNOLOGY ENLARGED FLOOR PLAN

T2.11

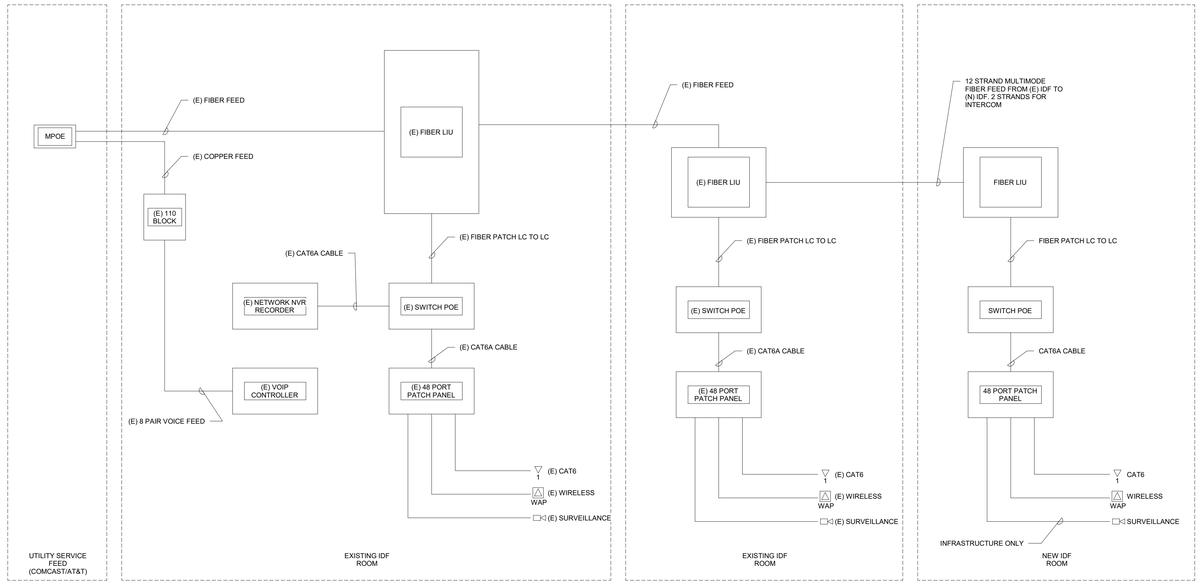

LOW VOLTAGE RISER DIAGRAM | NTS | 03

IDENTIFICATION STAMP
DIV. OF THE STATE ARCHITECT
APP: 02-119490 INC:
REVIEWED FOR
SS ☑ FLS ☑ ACS ☑
DATE: 09/13/2022

LPA
ARCHITECTURE ENGINEERING INTERIORS
LANDSCAPE ARCHITECTURE PLANNING

916-287-2400 Office
916-287-2401 Fax
LPADesignStudios.com
431 I Street,
Suite 107
Sacramento, California 95814

MEP & FS / Sustainability / CxA
CONSULTING ENGINEERS
1209 Pleasant Grove Blvd.
Roseville, CA 95678
p 916-771-0778
www.lpengineers.com
Job #: 21-2018

REGISTERED PROFESSIONAL ENGINEER
RAMI S. ZEID
No. E 16762
EXP. 9-30-22
ELECTRICAL
STATE OF CALIFORNIA

This document and all other project documents, ideas, aesthetics and designs incorporated therein are instruments of service. All project documents are copyright protected, are the property of LPA, Inc. (LPA) and cannot be lawfully used in whole or in part for any project or purpose except as set forth in the contractual agreement between LPA and its Client. The unauthorized disclosure and/or use of the project documents (including the creation of derivative works), may give rise to liability for copyright infringement, unlawful disclosure, use or misappropriation of property rights held by LPA. The unauthorized use of the project documents will give rise to the recovery of monetary losses and damages including attorney fees and costs for which the unauthorized user will be held liable.
Project documents describe the design intent of the work and are not a representation of as-built or existing conditions. LPA is not responsible for any discrepancies between the project documents and the existing conditions.

© LPA, Inc.

DAVIS SR HIGH SCHOOL
AQUATICS CENTER
315 W 14TH ST
DAVIS, CA 95616

Developed for
DAVIS JOINT UNIFIED SCHOOL DISTRICT

Revision	Date

Submittal	Date
50% DD REVIEW	06/15/2021
100% DD SUBMITTAL	07/26/2021
50% CD REVIEW	10/08/2021
100% CD REVIEW	10/22/2021
DSA SUBMITTAL	03/24/2022

Job Number	1904413
Date Published	03/24/2022
Checked By	Checker
Scale	NTS

TECHNOLOGY
RISER DIAGRAM

T7.00

TYPICAL WALL MOUNTED IDF 48" HEIGHT /30" DEEP

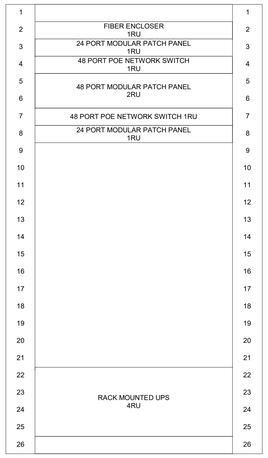

TYPICAL TELECOM IDF CABINET PLAN | N.T.S. | 03

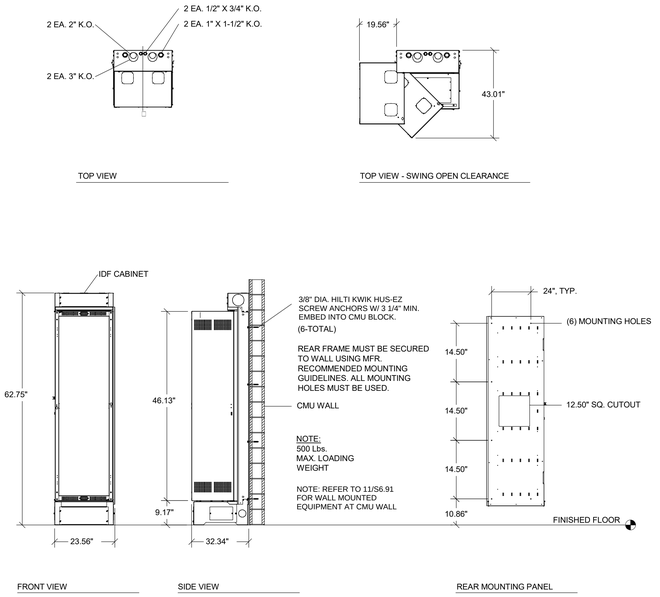

WALL MOUNTED IDF, MIDDLE ATLANTIC SR MODEL | 1/4" = 1'-0" | 1

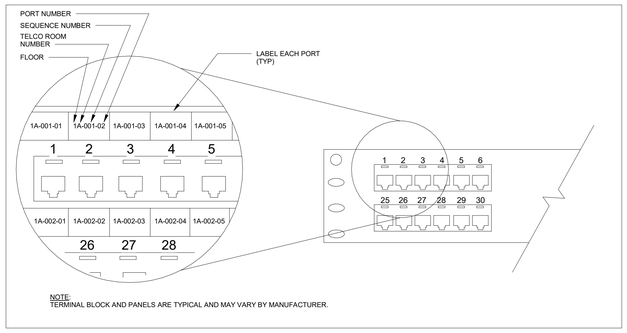

TYPICAL COPPER PATCH PANEL LABELING DETAIL | 3" = 1'-0" | 02

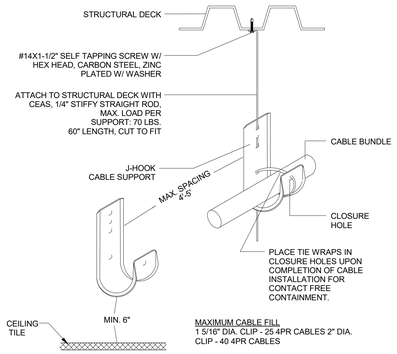

J-HOOK CABLE SUPPORT | 1/4" = 1'-0" | 5

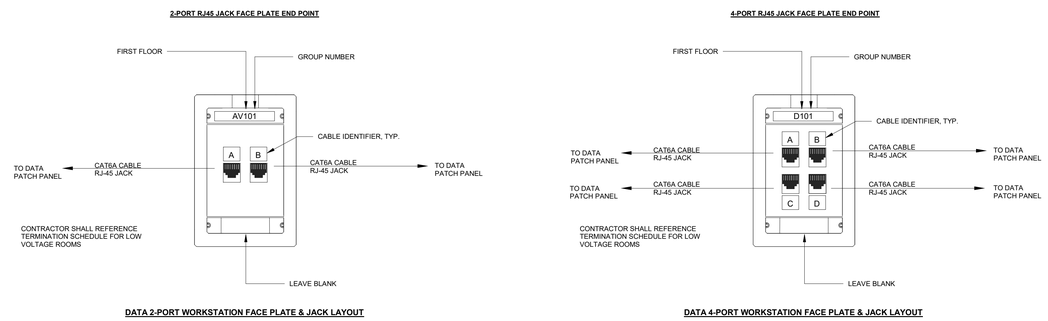

STANDARD 2-PORT & 4-PORT WORKSTATION FACE PLATE & JACK LAYOUT AT HUDDLE DISPLAY | N.T.S. | 04

IDENTIFICATION STAMP
DIV. OF THE STATE ARCHITECT
APP: 02-119490 INC:
REVIEWED FOR
SS ☑ FLS ☑ ACS ☑
DATE: 09/13/2022

LPA

ARCHITECTURE ENGINEERING INTERIORS
LANDSCAPE ARCHITECTURE PLANNING

916-287-2400 Office

916-287-2401 Fax

LPADesignStudios.com

431 I Street,
Suite 107
Sacramento, California 95814

MEP & FS / Sustainability / CxA

CONSULTING ENGINEERS

1209 Pleasant Grove Blvd.
Roseville, CA 95678
p 916-771-0778

www.lpengineers.com
Job #: 21-2018

REGISTERED PROFESSIONAL ENGINEER
RAMI S. ZEID
No. E 16762
EXP. 9-30-22
ELECTRICAL
STATE OF CALIFORNIA

This document and all other project documents, ideas, aesthetics and designs incorporated therein are instruments of service. All project documents are copyright protected, are the property of LPA, Inc. (LPA) and cannot be lawfully used in whole or in part for any project or purpose except as set forth in the contractual agreement between LPA and its Client. The unauthorized disclosure and/or use of the project documents (including the creation of derivative works), may give rise to liability for copyright infringement, unlawful disclosure, use or misappropriation of property rights held by LPA. The unauthorized use of the project documents will give rise to the recovery of monetary losses and damages including attorney fees and costs for which the unauthorized user will be held liable.
Project documents describe the design intent of the work and are not a representation of as-built or existing conditions. LPA is not responsible for any discrepancies between the project documents and the existing conditions.

© LPA, Inc.

DAVIS SR HIGH SCHOOL
AQUATICS CENTER
315 W 14TH ST
DAVIS, CA 95616

Developed for
DAVIS JOINT UNIFIED SCHOOL DISTRICT

Revision	Date

Submittal	Date
50% DD REVIEW	06/15/2021
100% DD SUBMITTAL	07/26/2021
50% CD REVIEW	10/08/2021
100% CD REVIEW	10/22/2021
DSA SUBMITTAL	03/24/2022

Job Number	1904413
Date Published	03/24/2022
Checked By	Checker
Scale	As indicated

TECHNOLOGY DETAILS

T9.00

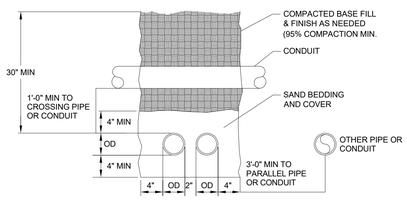

NOTE:
1. TRENCHING LOCATED IN PAVED AREAS - ALL EARTHWORK AND REPAIR SHALL BE IN ACCORDANCE WITH AGENCY THAT HAS JURISDICTION.
2. TRENCHING SHALL BE 5'-0" MINIMUM FROM THE EXTERIOR FOOTING OF THE BUILDING.
3. REFER TO CIVIL PLAN SET SHEET 01/C7.01 FOR MORE INFORMATION.

TYPICAL TRENCHING DETAIL | 1/4" = 1'-0" | 4

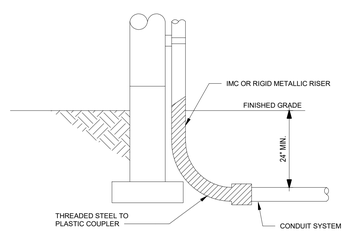

90° BEND METALLIC RISER COUPLED TO PVC | 1/4" = 1'-0" | 03

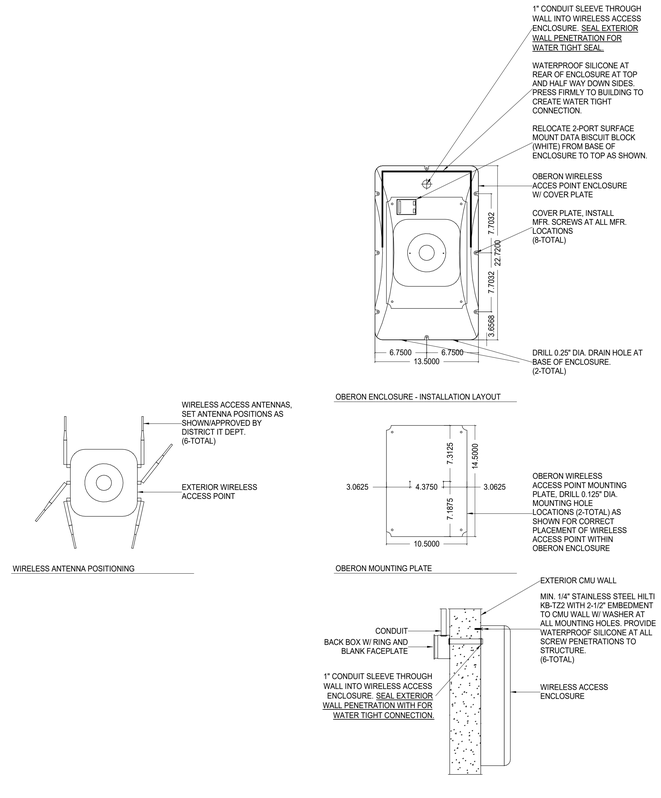

WAP EXTERIOR CONCRETE DETAIL | 1/4" = 1'-0" | 01

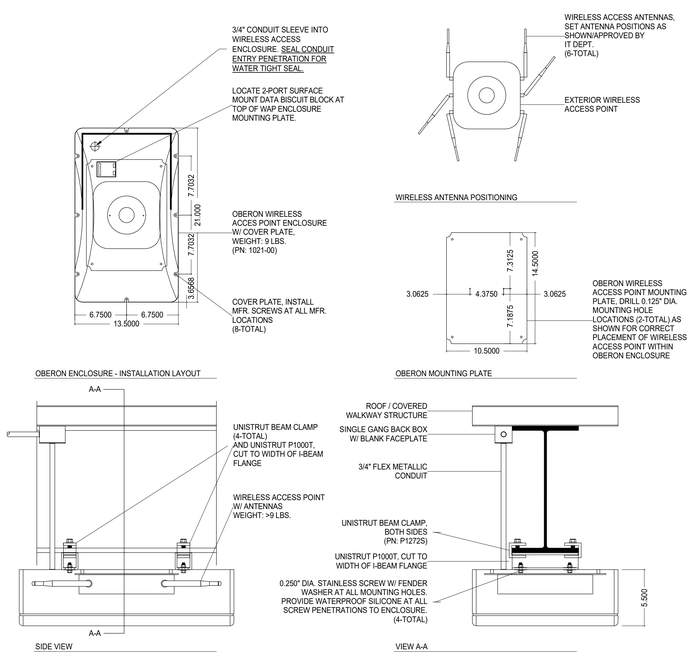

EXTERIOR WAP I-BEAM DETAIL | 1/4" = 1'-0" | 02

IDENTIFICATION STAMP
DIV. OF THE STATE ARCHITECT
APP: 02-119490 INC:
REVIEWED FOR
SS ☑ FLS ☑ ACS ☑
DATE: 09/13/2022

LPA

ARCHITECTURE ENGINEERING INTERIORS
LANDSCAPE ARCHITECTURE PLANNING

916-287-2400 Office

916-287-2401 Fax

LPADesignStudios.com

431 I Street,
Suite 107
Sacramento, California 95814

MEP & FS / Sustainability / CxA

1209 Pleasant Grove Blvd.
Roseville, CA 95678
p 916-771-0778

CONSULTING ENGINEERS

www.lpengineers.com
Job #: 21-2018

REGISTERED PROFESSIONAL ENGINEER
RAMI S. ZEID
No. E 16762
EXP. 9-30-22
ELECTRICAL
STATE OF CALIFORNIA

This document and all other project documents, ideas, aesthetics and designs incorporated therein are instruments of service. All project documents are copyright protected, are the property of LPA, Inc. (LPA) and cannot be lawfully used in whole or in part for any project or purpose except as set forth in the contractual agreement between LPA and its Client. The unauthorized disclosure and/or use of the project documents (including the creation of derivative works), may give rise to liability for copyright infringement, unlawful disclosure, use or misappropriation of property rights held by LPA. The unauthorized use of the project documents will give rise to the recovery of monetary losses and damages including attorney fees and costs for which the unauthorized user will be held liable. Project documents describe the design intent of the work and are not a representation of as-built or existing conditions. LPA is not responsible for any discrepancies between the project documents and the existing conditions.

© LPA, Inc.

DAVIS SR HIGH SCHOOL
AQUATICS CENTER
315 W 14TH ST
DAVIS, CA 95616

Developed for
DAVIS JOINT UNIFIED SCHOOL DISTRICT

Revision	Date

Submittal	Date
50% DD REVIEW	06/15/2021
100% DD SUBMITTAL	07/26/2021
50% CD REVIEW	10/08/2021
100% CD REVIEW	10/22/2021
DSA SUBMITTAL	03/24/2022

Job Number	1904413
Date Published	03/24/2022
Checked By	Checker
Scale	As indicated

TECHNOLOGY
DETAILS

T9.01

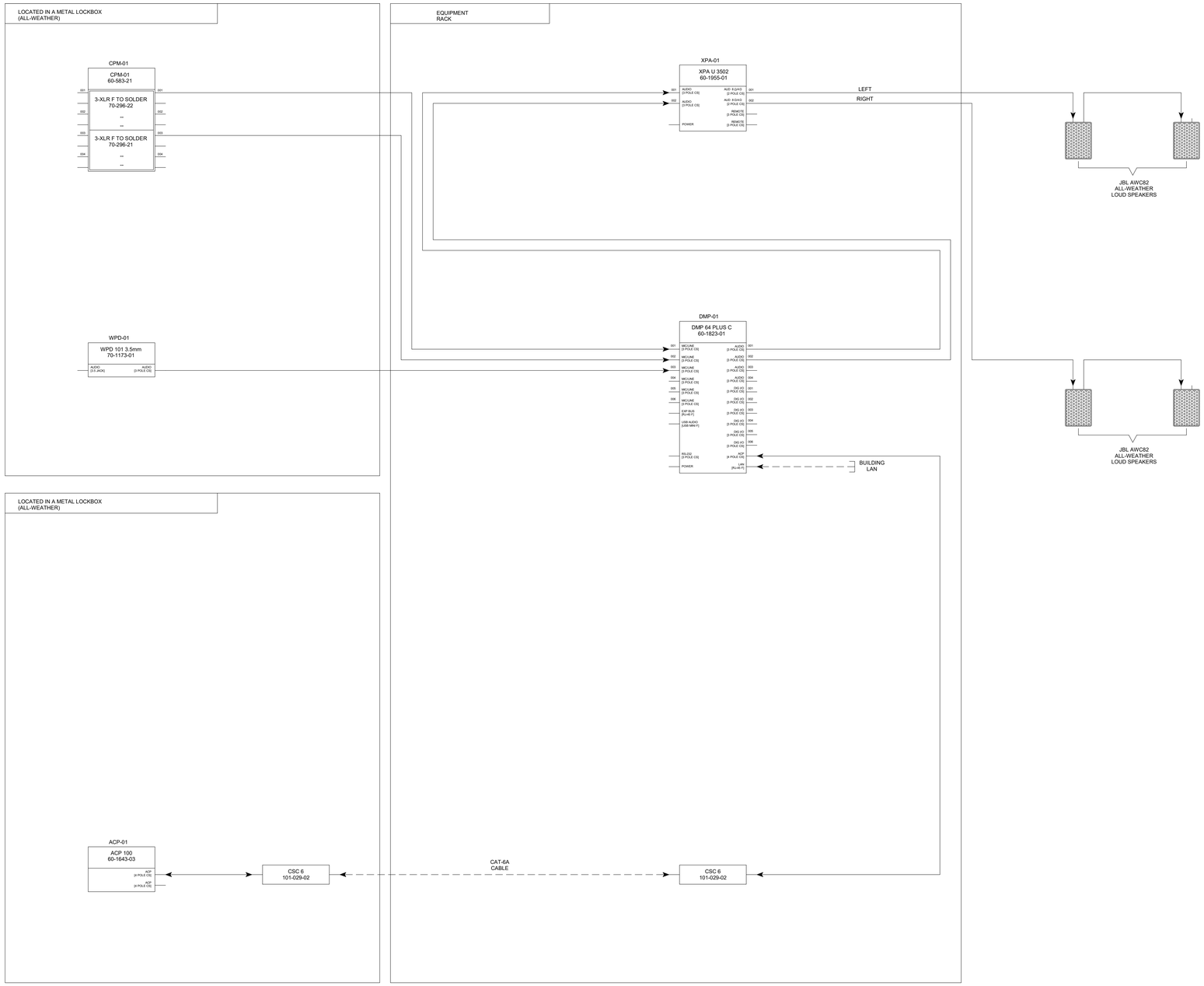

AV RISER DIAGRAM | NTS | 01

IDENTIFICATION STAMP
DIV. OF THE STATE ARCHITECT
APP: 02-119490 INC:
REVIEWED FOR
SS ☑ FLS ☑ ACS ☑
DATE: 09/13/2022

LPA

ARCHITECTURE ENGINEERING INTERIORS
LANDSCAPE ARCHITECTURE PLANNING

916-287-2400 Office

916-287-2401 Fax

LPADesignStudios.com

431 I Street,
Suite 107
Sacramento, California 95814

MEP & FS / Sustainability / CxA

1209 Pleasant Grove Blvd.
Roseville, CA 95678
p 916-771-0778

CONSULTING ENGINEERS

www.lpengineers.com
Job #: 21-2018

REGISTERED PROFESSIONAL ENGINEER
RAMI S. ZEID
No. E 16762
EXP. 9-30-22
ELECTRICAL
STATE OF CALIFORNIA

This document and all other project documents, ideas, aesthetics and designs incorporated therein are instruments of service. All project documents are copyright protected, are the property of LPA, Inc. (LPA) and cannot be lawfully used in whole or in part for any project or purpose except as set forth in the contractual agreement between LPA and its Client. The unauthorized disclosure and/or use of the project documents (including the creation of derivative works), may give rise to liability for copyright infringement, unlawful disclosure, use or misappropriation of property rights held by LPA. The unauthorized use of the project documents will give rise to the recovery of monetary losses and damages including attorney fees and costs for which the unauthorized user will be held liable.
Project documents describe the design intent of the work and are not a representation of as-built or existing conditions. LPA is not responsible for any discrepancies between the project documents and the existing conditions.

© LPA, Inc.

DAVIS SR HIGH SCHOOL
AQUATICS CENTER
315 W 14TH ST
DAVIS, CA 95616

Developed for
DAVIS JOINT UNIFIED SCHOOL DISTRICT

Revision	Date

Submittal	Date
50% DD REVIEW	06/15/2021
100% DD SUBMITTAL	07/26/2021
50% CD REVIEW	10/08/2021
100% CD REVIEW	10/22/2021
DSA SUBMITTAL	03/24/2022

Job Number	1904413
Date Published	03/24/2022
Checked By	Checker
Scale	NTS

TECHNOLOGY AV
RISER DIAGRAM

T9.02

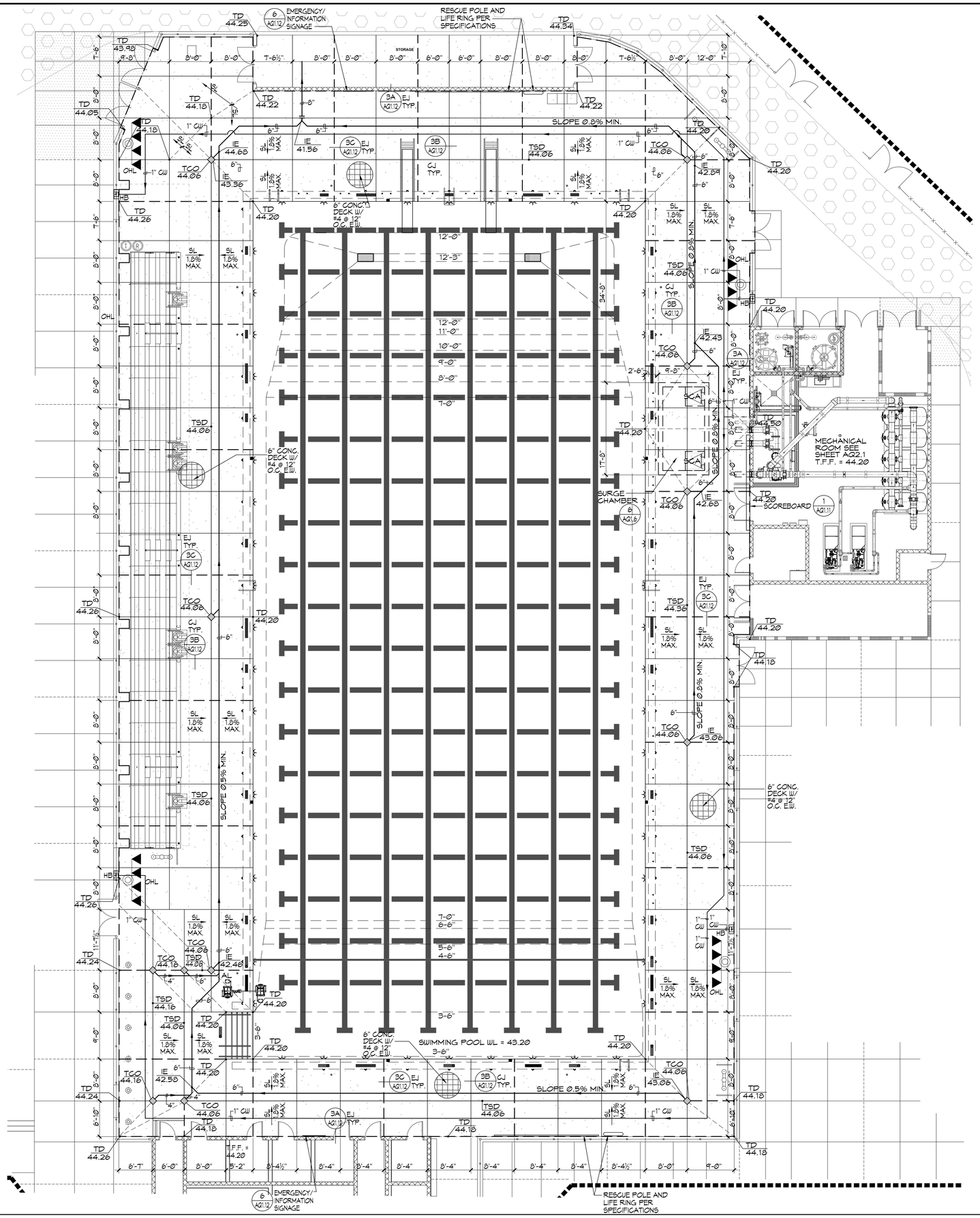

SWIMMING POOL DATA

SURFACE AREA	=	12,369 SQ. FT.
PERIMETER	=	488 FT.
DEPTH	=	3'-6" TO 12'-3"
VOLUME	=	691,976 GALLONS
6 HR TURNOVER	=	1,922 GPM

LEGEND

— —EJ— —	=	EXPANSION JOINT
—CJ—	=	CONTROL JOINT
—TSD—	=	TOP OF SLOT DRAIN
TCO	=	TOP OF CLEAN-OUT
AL	=	ACCESSIBLE LIFT
HB	=	HOSE BIBB
SCA	=	SURGE CHAMBER ACCESS COVER
CW	=	COLD WATER
SL	=	SLOPE DIRECTION
WL	=	WATERLEVEL
TD	=	TOP OF DECK
TFF	=	TOP OF FINISHED FLOOR
I.E.	=	INVERT ELEVATION
P.O.C.	=	POINT OF CONNECTION
SD	=	STORM DRAIN
OHL	=	OVERHEAD LIGHT

NOTES:

1. COORDINATE SIGNAGE PLACEMENT AND COLOR SCHEME WITH OWNER PRIOR TO INSTALLATION.
2. DECKS SHALL HAVE 1% MIN. SLOPE AND 1.8% MAX. SLOPE TO DRAINS.
3. ALL POOL DECKING SHALL BE NON-SLIP AND NON-ABRASIVE MEDIUM BROOM FINISH WITH NATURAL GRAY CONCRETE UNLESS OTHERWISE NOTED.
4. REFER TO ARCHITECTURAL PLANS FOR LOCATIONS AND QUANTITY OF REQUIRED EXITS, DRINKING FOUNTAINS, AND SANITARY FIXTURES.
5. THE POOL CANNOT BE WITHOUT AN APPROVED POOL ENCLOSURE AT ANY TIME, INCLUDING DURING CONSTRUCTION AND INSTALLATION OF THE NEW POOL ENCLOSURE.
5. THE POOL CANNOT BE WITHOUT AN APPROVED POOL ENCLOSURE AT ANY TIME, INCLUDING DURING CONSTRUCTION AND INSTALLATION OF THE NEW POOL ENCLOSURE.
6. REFER TO SHEET G0.11 FOR APPLICABLE CODES FOR POOL INCLUDING:
   - 2019 CBC SECTION 3109
   - 2019 CBC CHAPTER 31B
   - APPROVAL FROM THE YOLO COUNTY HEALTH DEPARTMENT HAS BEEN GRANTED ON DECEMBER 17th, 2021.

POOL DESIGN CRITERIA

POOL DESIGN CODES

CALIFORNIA BUILDING CODE 2019
ASCE 7-16

POOL DESIGN CRITERIA

PER GEOTECHNICAL ENGINEERING INVESTIGATION BY:
WALLACE KUHL, FEBRUARY 17, 2021

UN-DRAINED CONDITIONS (PER SOIL REPORT)

AT-REST PRESSURE:	100 pcf	
EFPseismic:	100 pcf + 10 pcf = 110 psf	FOR DEPTHS > 6'-0"
BEARING PRESSURE:	2,000 psf	
PASSIVE PRESSURE:	250 psf/ft	
COEFF. OF FRICTION:	0.25	

SURCHARGE AT DECK

1) ASSUME 50% OF VERTICALLY APPLIED SURCHARGE TO ACT AS HORIZONTAL UNIFORM LOAD ON POOL WALL.
2) DL = WEIGHT OF 8" MAX. CONCRETE DECK SLAB ABOVE.
3) LL DESIGN CASE = POOL EMPTY DURING CONSTRUCTION OR FOR SHORT TERM MAINTENANCE. NO 100 psf LL FOR FULL CROWD OPERATING CONDITION WHEN EMPTY.

CONCRETE DESIGN

fc = 4,000 psi MIN.
fy = 60 ksi

NOTE:

1. HYDROSTATIC PRESSURE RELIEF VALVES ARE PROVIDED IN POOL FLOOR SLABS TO ESTABLISH A "DRAINED CONDITION" (WHEN THE POOL IS EMPTY) IN THE PRESENCE OF A GROUND WATER TABLE, A PERCHED GROUND WATER CONDITION, OR POOR SITE DRAINAGE.

1 **SWIMMING POOL DECK PLAN** 1/8"=1'-0"

IDENTIFICATION STAMP
DIV. OF THE STATE ARCHITECT
APP: 02-119490 INC:
REVIEWED FOR
SS ☑ FLS ☑ ACS ☑
DATE: 09/13/2022

LPA
ARCHITECTURE ENGINEERING INTERIORS
LANDSCAPE ARCHITECTURE PLANNING

916-287-2400 Office
916-287-2401 Fax
LPADesignStudios.com
431 I Street,
Suite 107
Sacramento, California 95814

AQUATIC DESIGN GROUP
2228 Faraday Ave. Carlsbad, CA 92008
AquaticDesignGroup.com
760.438.8400

LICENSED ARCHITECT GERRY S. SHIRE C35862 REN. 07/31/23 STATE OF CALIFORNIA

This document and all other project documents, ideas, aesthetics and designs incorporated therein are instruments of service. All project documents are copyright protected, are the property of LPA, Inc. (LPA) and cannot be lawfully used in whole or in part for any project or purpose except as set forth in the contractual agreement between LPA and its Client. The unauthorized disclosure and/or use of the project documents (including the creation of derivative works), may give rise to liability for copyright infringement, unlawful disclosure, use or misappropriation of property rights held by LPA. The unauthorized use of the project documents will give rise to the recovery of monetary losses and damages including attorney fees and costs for which the unauthorized user will be held liable.
Project documents describe the design intent of the work and are not a representation of as-built or existing conditions. LPA is not responsible for any discrepancies between the project documents and the existing conditions.

© LPA, Inc.

DAVIS SR HIGH SCHOOL
AQUATICS CENTER
315 W 14TH ST., DAVIS, CA 95616

Developed for
DAVIS JOINT UNIFIED SCHOOL DISTRICT

Revision	Date

Submittal	Date
50% DD REVIEW	06/15/2021
100% DD SUBMITTAL	07/26/2021
50% CD REVIEW	10/08/2021
100% CD DSA SUBMITTAL	10/22/2021

Job Number	1904413
Date Published	10/22/2021
Checked By	SJF
Scale	1/8"=1'-0"

SWIMMING POOL DECK PLAN

AQ1.0

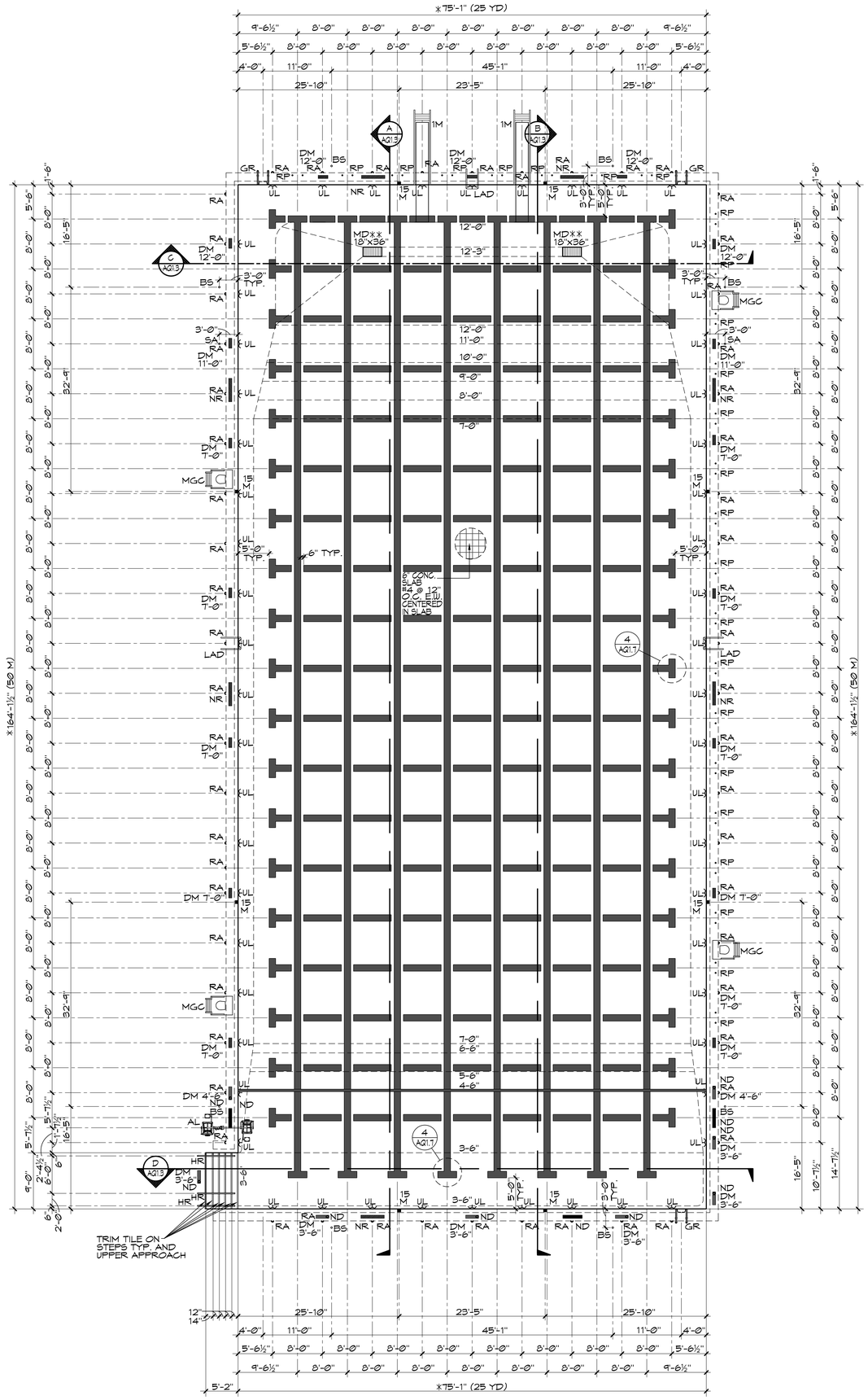

SWIMMING POOL DATA

SURFACE AREA	=	12,369 SQ. FT.
PERIMETER	=	488 FT.
DEPTH	=	3'-6" TO 12'-3"
VOLUME	=	691,976 GALLONS
6 HR TURNOVER	=	1,922 GPM

LEGEND

MD	=	MAIN DRAIN	4 AQ1.5
GR	=	GRABRAIL	1 AQ1.5
DM	=	DEPTH MARKER	5 AQ1.7
NR	=	'NO RUNNING'	6 AQ1.7
ND	=	'NO DIVING'	6 AQ1.7, 7 AQ1.7
1M	=	ONE METER DIVE STAND	2 AQ1.5
RA	=	ROPE ANCHOR	2 AQ1.5
RP	=	RAGING PLATFORM	6 AQ1.5
BS	=	BACKSTROKE STANCHION	3 AQ1.5
UL	=	UNDERWATER LIGHT	6 AQ1.10
MGC	=	MOVEABLE GUARD CHAIR	5 AQ1.5
AL	=	ACCESSIBLE LIFT	1 AQ1.5
LAD	=	LADDER	4 AQ1.5
HR	=	HANDRAIL	8 AQ1.7
SA	=	STANCHION ANCHOR	3 AQ1.5

CERTIFICATION REQUIREMENTS

* THE CONTRACTOR SHALL RETAIN AN INDEPENDENT LICENSED SURVEYOR TO PROVIDE PROOF OF COMPLIANCE FOR REQUIRED POOL LENGTHS AS FOLLOWS: (RECOMMEND PATRELL ENG. GROUP (626) 335-4362)

  SHORT COURSE-25YDS: (ALLOWS FOR TOUCH PADS AT ONE END) 75'-0 5/16" MIN.; 75'-1 3/16" MAX.

  LONG COURSE-50M: (ALLOWS FOR TOUCH PADS AT BOTH ENDS) 164'-1⅛" MIN.; 164'-1 1/16" MAX.

  TOLERANCE AGAINST LENGTH SHALL EXTEND IN A VERTICAL PLANE 0.3M (12") ABOVE AND 0.3M. (2'-7½") BELOW THE SURFACE OF THE WATER AT ALL POINTS OF BOTH END WALLS TYP. OF ALL COURSES.

  THE INDEPENDENT LICENSED SURVEYOR SHALL FILL OUT, NOTARIZE AND FILE OFFICIAL CERTIFICATION FORM(S) WITH USA SWIMMING FOR CLASS A COMPETITION POOL.

** CONTRACTOR SHALL RETAIN A LICENSED ENGINEER TO CERTIFY THE MAIN DRAIN SYSTEMS AS V.G.B. COMPLIANT.

1 **SWIMMING POOL LAYOUT PLAN (SWIMMING)** ⅛"=1'-0"

IDENTIFICATION STAMP
DIV. OF THE STATE ARCHITECT
APP: 02-119490 INC:
REVIEWED FOR
SS ☑ FLS ☑ ACS ☑
DATE: 09/13/2022

LPA
ARCHITECTURE ENGINEERING INTERIORS
LANDSCAPE ARCHITECTURE PLANNING

916-287-2400 Office
916-287-2401 Fax
LPADesignStudios.com
431 I Street,
Suite 107
Sacramento, California 95814

AQUATIC DESIGN GROUP
2228 Faraday Ave. Carlsbad, CA 92008
AquaticDesignGroup.com
760.438.8400

LICENSED ARCHITECT GREGORY S. JOHNSON
C35862
REN. 07/31/23
STATE OF CALIFORNIA

This document and all other project documents, ideas, aesthetics and designs incorporated therein are instruments of service. All project documents are copyright protected, are the property of LPA, Inc. (LPA) and cannot be lawfully used in whole or in part for any project or purpose except as set forth in the contractual agreement between LPA and its Client. The unauthorized disclosure and/or use of the project documents (including the creation of derivative works), may give rise to liability for copyright infringement, unlawful disclosure, use or misappropriation of property rights held by LPA. The unauthorized use of the project documents will give rise to the recovery of monetary losses and damages including attorney fees and costs for which the unauthorized user will be held liable.
Project documents describe the design intent of the work and are not a representation of as-built or existing conditions. LPA is not responsible for any discrepancies between the project documents and the existing conditions.

© LPA, Inc.

DAVIS SR HIGH SCHOOL
AQUATICS CENTER
315 W 14TH ST., DAVIS, CA 95616

Developed for
DAVIS JOINT UNIFIED SCHOOL DISTRICT

Revision	Date

Submittal	Date
50% DD REVIEW	06/15/2021
100% DD SUBMITTAL	07/26/2021
50% CD REVIEW	10/08/2021
100% CD DSA SUBMITTAL	10/22/2021

Job Number	1904413
Date Published	10/22/2021
Checked By	SJF
Scale	1/8"=1'-0"

SWIMMING POOL
LAYOUT PLAN
(SWIMMING)

AQ1.1

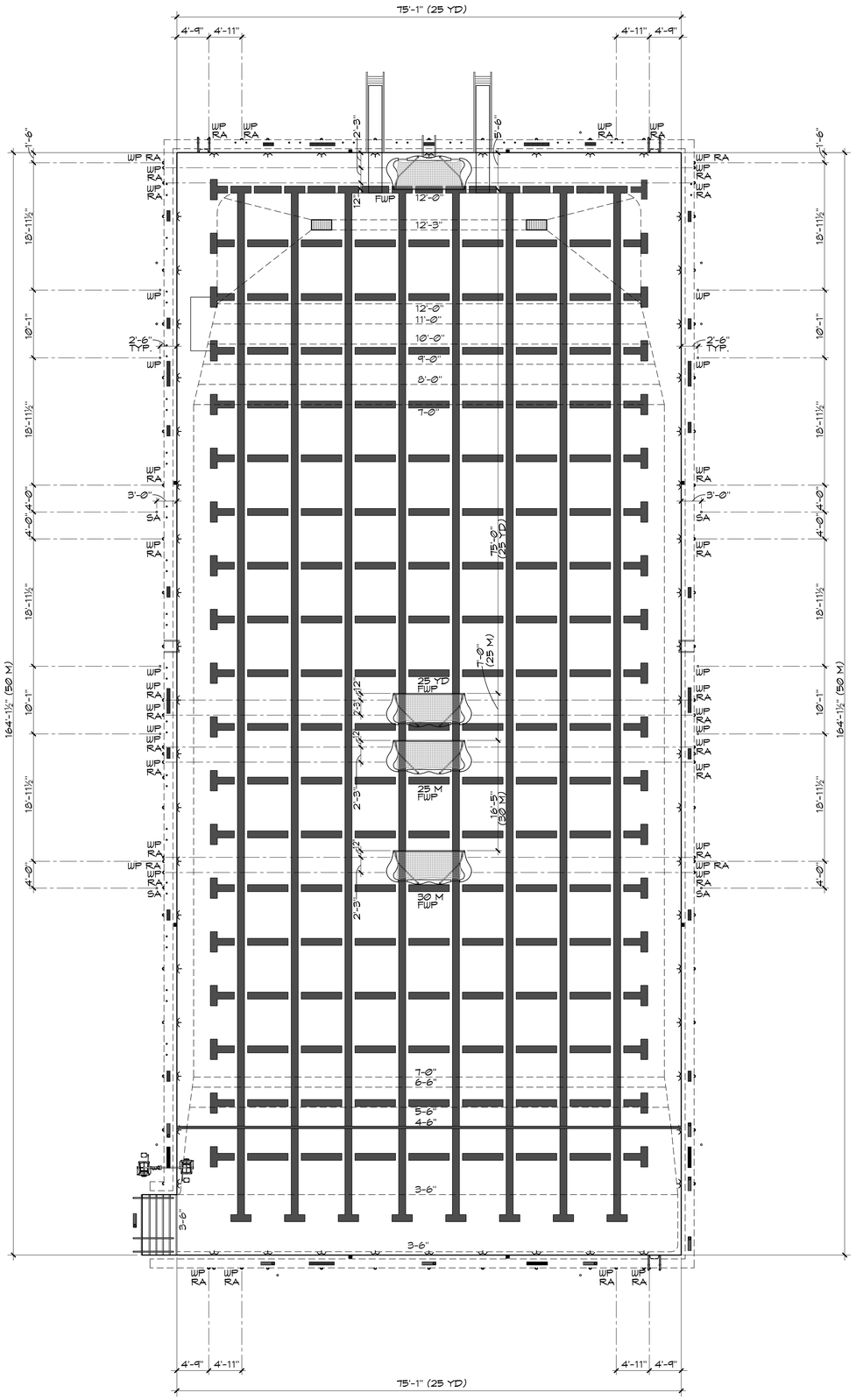

SWIMMING POOL DATA

SURFACE AREA	=	12,369 SQ. FT.
PERIMETER	=	488 FT.
DEPTH	=	3'-6" TO 12'-3"
VOLUME	=	691,976 GALLONS
6 HR TURNOVER	=	1,922 GPM

LEGEND

SA	=	STANCHION ANCHOR	3 / AQ1.5
FWP	=	FLOATING WATERPOLO	3 / AQ1.5
WP	=	WATERPOLO (STATIONARY)	7 / AQ1.5
RA	=	ROPE ANCHOR	2 / AQ1.5

NORTH

1 SWIMMING POOL LAYOUT PLAN (WATERPOLO) 1/8"=1'-0"

IDENTIFICATION STAMP
DIV. OF THE STATE ARCHITECT
APP: 02-119490 INC:
REVIEWED FOR
SS ☑ FLS ☑ ACS ☑
DATE: 09/13/2022

LPA
ARCHITECTURE ENGINEERING INTERIORS
LANDSCAPE ARCHITECTURE PLANNING

916-287-2400 Office
916-287-2401 Fax
LPADesignStudios.com
431 I Street,
Suite 107
Sacramento, California 95814

AQUATIC DESIGN GROUP
2228 Faraday Ave. Carlsbad, CA 92008
AquaticDesignGroup.com
760.438.8400

LICENSED ARCHITECT
GREGORY S. JOHNSON
C35862
REN. 07/31/23
STATE OF CALIFORNIA

This document and all other project documents, ideas, aesthetics and designs incorporated therein are instruments of service. All project documents are copyright protected, are the property of LPA, Inc. (LPA) and cannot be lawfully used in whole or in part for any project or purpose except as set forth in the contractual agreement between LPA and its Client. The unauthorized disclosure and/or use of the project documents (including the creation of derivative works), may give rise to liability for copyright infringement, unlawful disclosure, use or misappropriation of property rights held by LPA. The unauthorized use of the project documents will give rise to the recovery of monetary losses and damages including attorney fees and costs for which the unauthorized user will be held liable.
Project documents describe the design intent of the work and are not a representation of as-built or existing conditions. LPA is not responsible for any discrepancies between the project documents and the existing conditions.

© LPA, Inc.

DAVIS SR HIGH SCHOOL
AQUATICS CENTER
315 W 14TH ST., DAVIS, CA 95616

Developed for
DAVIS JOINT UNIFIED SCHOOL DISTRICT

Revision	Date

Submittal	Date
50% DD REVIEW	06/15/2021
100% DD SUBMITTAL	07/26/2021
50% CD REVIEW	10/08/2021
100% CD DSA SUBMITTAL	10/22/2021

Job Number	1904413
Date Published	10/22/2021
Checked By	SJF
Scale	1/8"=1'-0"

SWIMMING POOL
LAYOUT PLAN
(WATERPOLO)

AQ1.2

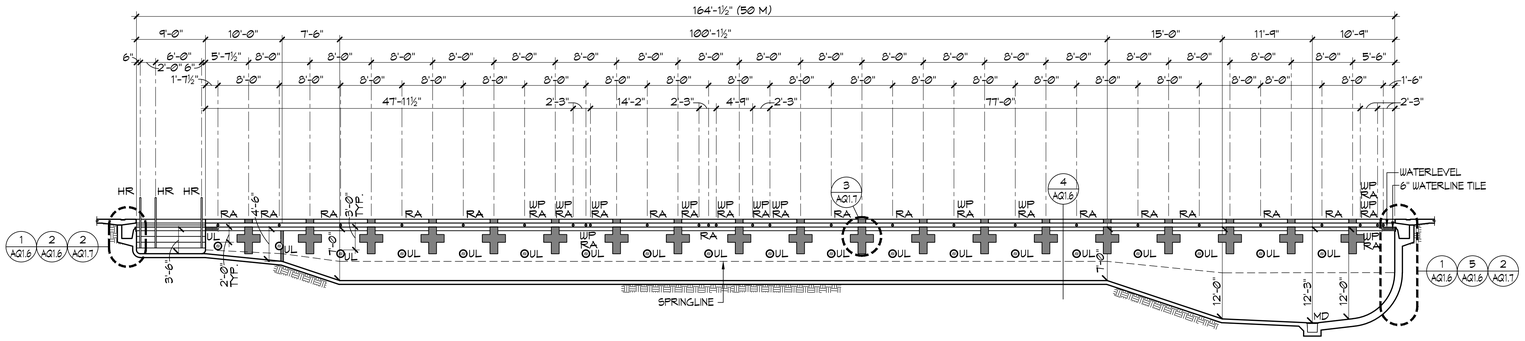

A

SWIMMING POOL SECTION

⅛"=1'-0"

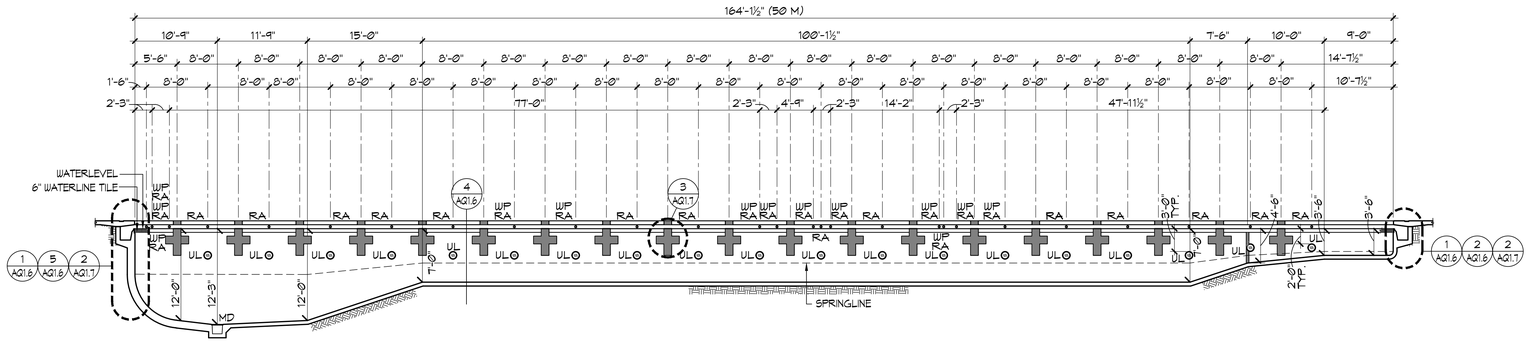

B

SWIMMING POOL SECTION

⅛"=1'-0"

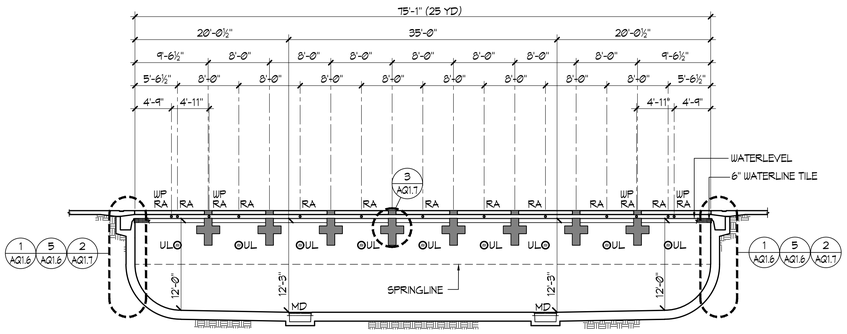

C

SWIMMING POOL SECTION

⅛"=1'-0"

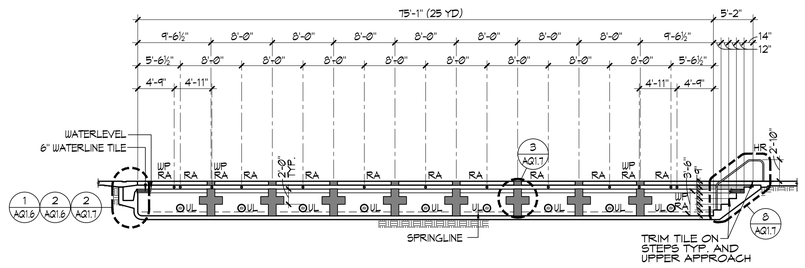

D

SWIMMING POOL SECTION

⅛"=1'-0"

IDENTIFICATION STAMP
DIV. OF THE STATE ARCHITECT
APP: 02-119490 INC:
REVIEWED FOR
SS ☑ FLS ☑ ACS ☑
DATE: 09/13/2022

LPA

ARCHITECTURE ENGINEERING INTERIORS
LANDSCAPE ARCHITECTURE PLANNING

916-287-2400 Office

916-287-2401 Fax

LPADesignStudios.com

431 I Street,
Suite 107
Sacramento, California 95814

AQUATIC DESIGN GROUP
2236 Faraday Ave. Carlsbad, CA 92008
AquaticDesignGroup.com
760-434.8400

LICENSED ARCHITECT
STEPHEN J. FERRELL
C35802
REN. 07/31/23
STATE OF CALIFORNIA

This document and all other project documents, ideas, aesthetics and designs incorporated therein are instruments of service. All project documents are copyright protected, are the property of LPA, Inc. (LPA) and cannot be lawfully used in whole or in part for any project or purpose except as set forth in the contractual agreement between LPA and its Client. The unauthorized disclosure and/or use of the project documents (including the creation of derivative works), may give rise to liability for copyright infringement, unlawful disclosure, use or misappropriation of property rights held by LPA. The unauthorized use of the project documents will give rise to the recovery of monetary losses and damages including attorney fees and costs for which the unauthorized user will be held liable.
Project documents describe the design intent of the work and are not a representation of as-built or existing conditions. LPA is not responsible for any discrepancies between the project documents and the existing conditions.

© LPA, Inc.

DAVIS SR HIGH SCHOOL
AQUATICS CENTER
315 W 14TH ST., DAVIS, CA 95616

Developed for
DAVIS JOINT UNIFIED SCHOOL DISTRICT

Revision	Date

Submittal	Date
50% DD REVIEW	06/15/2021
100% DD SUBMITTAL	07/26/2021
50% CD REVIEW	10/08/2021
100% CD DSA SUBMITTAL	10/22/2021

Job Number	1904413
Date Published	10/22/2021
Checked By	SJF
Scale	1/8"=1'-0"

SWIMMING POOL SECTIONS

AQ1.3

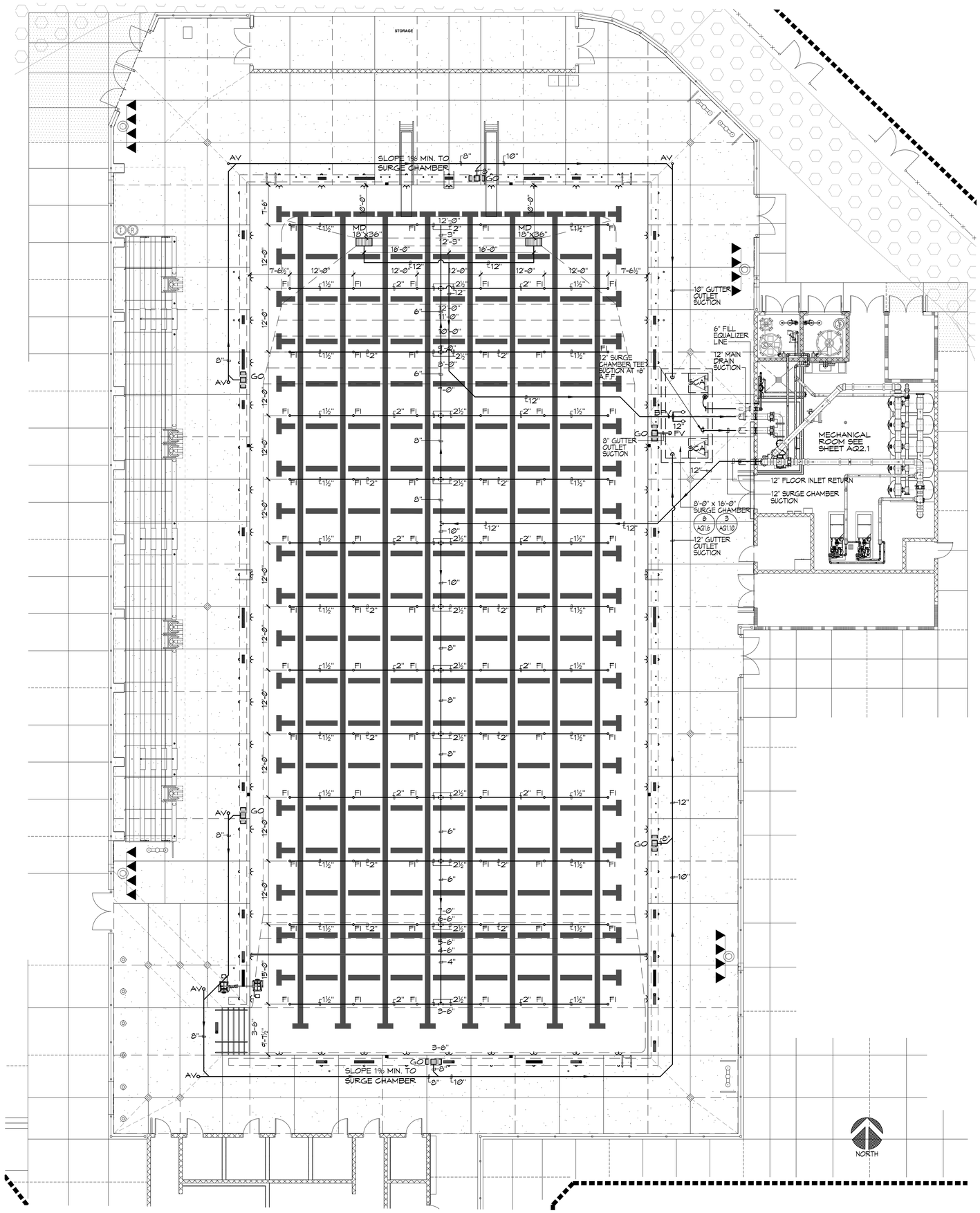

SWIMMING POOL DATA

SURFACE AREA	=	12,369 SQ. FT.
PERIMETER	=	488 FT.
DEPTH	=	3'-6" TO 12'-3"
VOLUME	=	691,976 GALLONS
6 HR TURNOVER	=	1,922 GPM

SWIMMING POOL SURGE DATA

REQUIRED SURGE CAPACITY	=	12,369 GAL.
SURGE IN PERIMETER GUTTER	=	6,698 GAL.
SURGE IN GUTTER PIPING	=	1,604 GAL.
8' x 16' SURGE IN SURGE CHAMBER	=	4,793 GAL.
TOTAL SUPPLIED SURGE	=	13,095 GAL.

∴13,095 GAL. > 12,369 GAL. + 5% OK

LEGEND

MD	=	MAIN DRAIN	4 AQ1.9
FI	=	FLOOR INLET	5 AQ1.9
GO	=	GUTTER OUTLET	1 AQ1.10
AV	=	AIR VENT	6 AQ1.9
SCA	=	SURGE CHAMBER ACCESS	7 AQ1.6
BFV	=	BUTTERFLY VALVE	4 AQ1.10
FV	=	FLOAT VALVE	
A.F.F.	=	ABOVE FINISH FLOOR	

NOTES:

5 AQ1.10

1. PIPING ROUTES ARE SCHEMATIC IN NATURE AND SHOWN ON PLANS FOR CLARITY. CONTRACTOR SHALL ROUTE PIPING ACCORDINGLY TO MEET NOTED INVERT ELEVATIONS. REFER TO REFERENCED DETAIL FOR PIPE SPACING REQUIREMENTS.
2. ALL BELOW GRADE POOL PIPING SHALL BE SCHEDULE 40 PVC AND ALL ABOVE GRADE POOL PIPING SHALL BE SCHEDULE 80 PVC.
3. COORDINATE ALL PIPING WITH SITE AND BUILDING UTILITIES INCLUDING PIPING, CONDUITS / STRUCTURES AND THE LIKE. COORDINATE ROUTING OF PIPING THROUGH STRUCTURAL SLAB. ALL PIPING SHALL HAVE UNIFORM SLOPE IN ONE DIRECTION.
4. SURGE CHAMBER TEE SUCTION SHALL BE SET AT +6" A.F.F. MAINTAIN MAXIMUM SEPARATION BETWEEN SUCTION AND INFLUENT PIPING WITHIN THE SURGE CHAMBER.
5. EACH MAIN DRAIN SHALL BE EQUIPPED WITH HYDROSTATIC RELIEF VALVE PER RECOMMENDATIONS OF GEOTECHNICAL REPORT

1 **SWIMMING POOL PIPING PLAN** ⅛"=1'-0"

IDENTIFICATION STAMP
DIV. OF THE STATE ARCHITECT
APP: 02-119490 INC:
REVIEWED FOR
SS ☑ FLS ☑ ACS ☑
DATE: 09/13/2022

LPA
ARCHITECTURE ENGINEERING INTERIORS
LANDSCAPE ARCHITECTURE PLANNING
916-287-2400 Office
916-287-2401 Fax
LPADesignStudios.com
431 I Street,
Suite 107
Sacramento, California 95814

AQUATIC DESIGN GROUP
2228 Faraday Ave. Carlsbad, CA 92008
AquaticDesignGroup.com
760.438.8400

LICENSED ARCHITECT GREGORY S. JOHNSON
C35862
REN. 07/31/23
STATE OF CALIFORNIA

This document and all other project documents, ideas, aesthetics and designs incorporated therein are instruments of service. All project documents are copyright protected, are the property of LPA, Inc. (LPA) and cannot be lawfully used in whole or in part for any project or purpose except as set forth in the contractual agreement between LPA and its Client. The unauthorized disclosure and/or use of the project documents (including the creation of derivative works), may give rise to liability for copyright infringement, unlawful disclosure, use or misappropriation of property rights held by LPA. The unauthorized use of the project documents will give rise to the recovery of monetary losses and damages including attorney fees and costs for which the unauthorized user will be held liable.
Project documents describe the design intent of the work and are not a representation of as-built or existing conditions. LPA is not responsible for any discrepancies between the project documents and the existing conditions.

© LPA, Inc.

DAVIS SR HIGH SCHOOL
AQUATICS CENTER
315 W 14TH ST., DAVIS, CA 95616

Developed for
DAVIS JOINT UNIFIED SCHOOL DISTRICT

Revision	Date

Submittal	Date
50% DD REVIEW	06/15/2021
100% DD SUBMITTAL	07/26/2021
50% CD REVIEW	10/08/2021
100% CD DSA SUBMITTAL	10/22/2021

Job Number	1904413
Date Published	10/22/2021
Checked By	SJF
Scale	1/8"=1'-0"

SWIMMING POOL
PIPING PLAN

AQ1.4

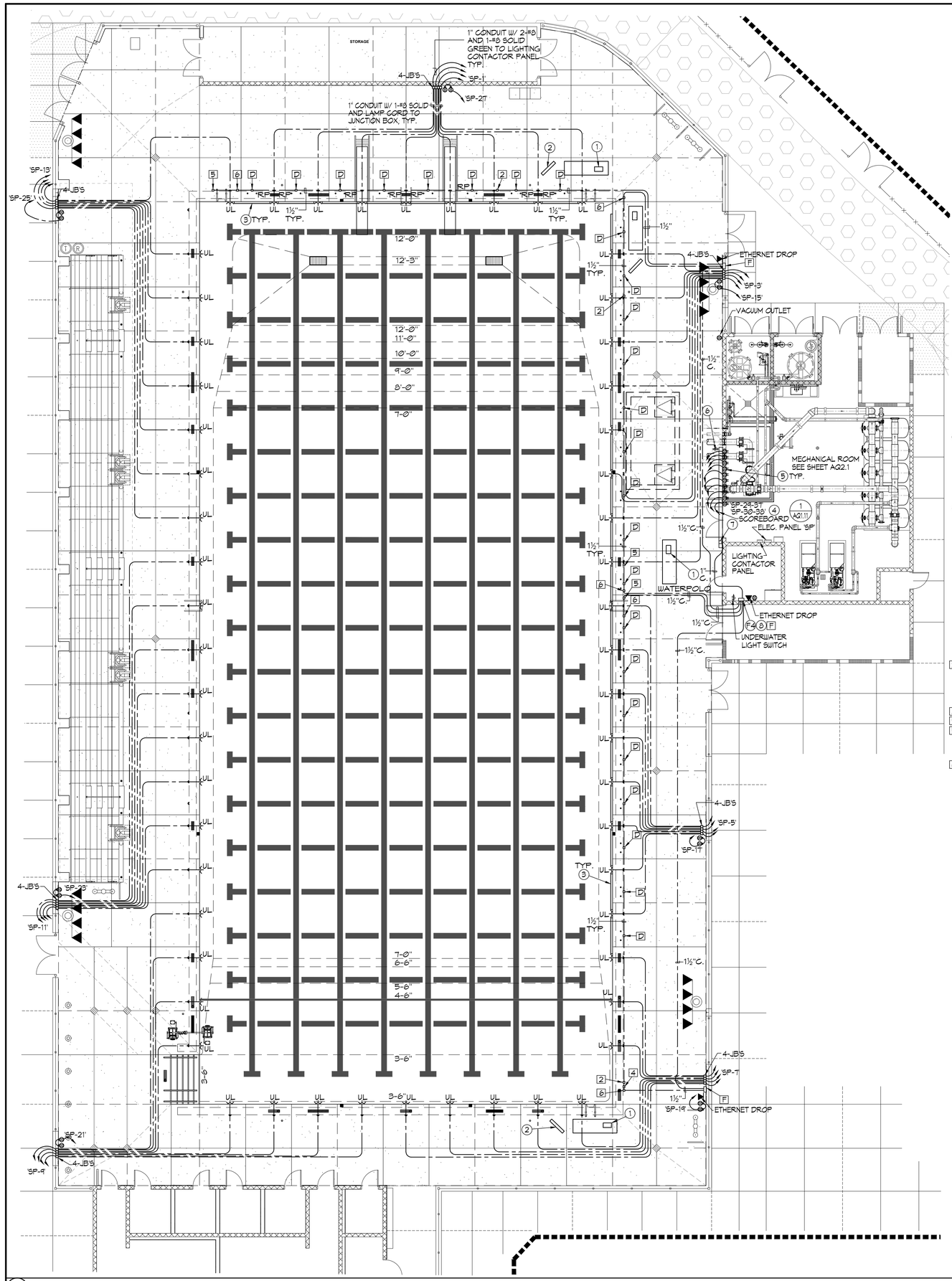

LEGEND

UL	=	UNDERWATER LIGHT	6 AQ1.10
JB	=	JUNCTION BOX	6 AQ1.10, 2 AQ1.11
RP	=	RACING PLATFORM	6 AQ1.8
WP	=	WALL PLATE	2 AQ1.11
DP	=	DECK PLATE	3 AQ1.11

KEY NOTES

	DESCRIPTION	QUANTITY	UNIT
	ETHERNET DROP-BY OTHERS	4	COUNT
F4	WALL PLATE FIBER CONNECTION	1	COUNT
11	WALL PLATE SCOREBOARD NODE	4	COUNT
12	WALL PLATE TIMER NODE	5	COUNT
3 AQ1.11, 4 D	TIMING DECK NODE (4"x4"x6" PVC BOX)	25	COUNT
2 2	START DECK NODE (4"x4"x6" PVC BOX)	3	COUNT
5 5	SCOREBOARD DECK NODE (4"x4"x6" PVC BOX)	3	COUNT
6	TITANUM TIMER CONNECT DECK PLATE (4"x4"x6" PVC BOX)	5	COUNT
2 AQ1.11, F	TIMING SYSTEM WALL INTERFACE WP1 W/ 12"x12"x6" PVC BOX	3	COUNT
4	CABLE HARNESS CONNECTION NODE	1	COUNT

TIMING SYSTEM NOTES/EQUIPMENT

NOTE: THE CONTRACTOR SHALL SUPPLY AND INSTALL DECK PLATE BOXES, WALL PLATE BOXES, WALL PLATE JUNCTION BOXES, CONDUIT, WIRING, SCOREBOARD AND ALL TIMING EQUIPMENT AS SHOWN FOR THE COLORADO TIME SYSTEM OR EQUAL.

TIMING SYSTEM

QTY	MODEL	DESCRIPTION
1 1	GENT-TMR	INTUITIVE SOFTWARE INTERFACE WITH MODERN WINDOWS USER INTERFACE AND TOUCHSCREEN FRIENDLY. FLEXIBLE USER INTERFACE OPTIONS WITH ETHERNET CONNECTIVITY TO THE TIMER. ADVANCED DIAGNOSTICS. INTELLIGENT BUS SYSTEM. ROBUST SAFEGUARDS. TIMER WILL CONTINUE TO RUN AND FINISH RACE WITHOUT USER. INTERFACE. WET-PLUGGABLE TITANUM CONNECTIONS. INTEGRATED 2.4 GHZ WIRELESS TO SCOREBOARDS, FACILITY NETWORK CONNECTIVITY.
1	R-600-302	GENT LAPTOP

START SYSTEM

QTY	MODEL	DESCRIPTION
2 2	SS	CHAMPION SERIES START SYSTEM WITH WIRED MICROPHONE, VOLUME CONTROL ON EACH MICROPHONE INPUT, EXTERNAL CONNECTIONS FOR ADDITIONAL STROBE LIGHTS, LED BATTERY INDICATION LIGHT, AC/DC POWER CAPABILITIES AND AN EXTERNAL 360° STROBE. TRIPOD OR TABLE TOP OPTIONS.
2	START-FPM-2	FLAG POLE MOUNTING KIT FOR STARTER
17	SP-6/45	6 WATT INDIVIDUAL BLOCK SPEAKER

TOUCHPADS

QTY	MODEL	DESCRIPTION
5 18	TP-90G	AQUAGRIP GUTTERHUNG TOUCHPADS (90" x 22") US PATENT 5,702,199
2	CAD-TP96	TOUCHPAD CADDY FOR GUTTERHUNG TOUCHPADS. HOLDS UP TO TEN TOUCHPADS. SOME ASSEMBLY REQUIRED.
18	4000-0040	SPECIAL SIZE TOUCHPAD BRACKETS

GENT TOUCHPAD SYSTEM

QTY	MODEL	DESCRIPTION
1	TP-GENT-10	TEN-LANE TOUCHPAD SYSTEM FOR THE GEN 7 TIMING SYSTEM (SERIAL) INCLUDES AN TEN-LANE CABLE HARNESS, ONE PUSHBUTTON PER LANE+ ONE SPARE, VACUUM PUMP AND TOUCHPAD METER.

GENT CABLE

QTY	MODEL	DESCRIPTION
1	R-015-107-8	SCOREBOARD CABLE, 8 METER
1	R-015-115-8	TIMER CABLE, 8 METER
1	R-015-106-8	STARTER CABLE, 8 METER
1	R-015-115-15	TIMER CABLE, 15 METER

GENT IN DECK

QTY	MODEL	DESCRIPTION
D 25	TDPI-D	TITANUM DOMED DECK PLATE-INTELLIGENT TITANUM DECK PLATES REQUIRE A 4" SQUARE OR 4.125" DIAMETER CIRCULAR OPENING AT A MINIMUM. WRITTEN VERIFICATION AND SIGN OFF REQUIRED FROM CUSTOMER. NOTE: INCLUDES 5 YEAR WARRANTY. CTS IS THE ONLY MANUFACTURER OF TITANIUM DECK PLATE.
2 3	TDPI-S2	START DECK NODE
5 3	TDPI-SC5	SCOREBOARD DECK NODE
F 4	R-1004-0549	GENT WALL PLATE (15X15)
1	TDPI-K1	KIT-SCOREBOARD BUS HEAD& TAIL NODE INSTALLATION
1	TDPI-K1	KIT-TIMING BUS HEAD & TAIL NODE INSTALLATION
1	WPI-F4	WP-YDS FIBER & LEGACY CONNECT
6 5	TDPI-T1	TIMER DECK NODE

GENT CABLE

QTY	MODEL	DESCRIPTION
1200'	R-015-137	TIMING BUS CABLE- 7 CONDUCTOR
1200'	R-015-126	SCOREBOARD BUS CABLE- 4 CONDUCTOR

PACE CLOCK

QTY	MODEL	DESCRIPTION
1	PC-PRO-R	PACE CLOCK - PRO/WATER POLO SHOT CLOCK
1	DC-1500	SPECIFICATIONS: • 4 DIGIT PACE CLOCK • 10" RED DIGITS - VISIBLE UP TO 400 FEET • HIGH INTENSITY LED - INDOOR/OUTDOOR • "SPLASH-PROOF" PROTECTIVE LENS • INTERNAL RECHARGEABLE BATTERY • INTERNAL HORN • FEET AND HANDLE
	1 PC-PRO AND 1 DC 1500 DECK CLOCKS PER OWNER APPROVAL.	

FUNCTIONS:

- SIMPLE PACE CLOCK
- CUMULATIVE SPLIT DISPLAY
- LAP SPLIT DISPLAY
- LAP COUNTER
- LAP SPLIT DISPLAY WITH TURN SPEED
- RELAY EXCHANGES DISPLAY
- START REACTION DISPLAY
- HAND TURN SPEED
- BREAK OUT SPEED DISPLAY
- BREAK OUT SPEED DISPLAY WITH START REACTION
- TIME DISPLAY FOR REPETITIVE SETS
- SINGLE LANE TIMER
- MID-RACE TIMING DISPLAY
- WATERPOLO SHOT CLOCK
- WATERPOLO GAME CLOCK

NOTE: MOST FUNCTIONS REQUIRE ADDITIONAL INPUT DEVICES, I.e. TOUCHPAD, RELAY JUDGING PLATFORM, START SYSTEM, PUSHBUTTON

CONTROLLER

QTY	MODEL	DESCRIPTION
1	WTTC-2	WIRELESS TABLE TOP CONTROLLER
1	CASE-WTTC	CASE FOR THE WIRELESS TABLE TOP CONTROLLER
1	WHC-1	WIRELESS HANDHELD CONTROLLER

ADAPTER

QTY	MODEL	DESCRIPTION
1	WA-3	WIRELESS ADAPTER, 2.4 GHZ

RELAY JUDGING PLATFORM

QTY	MODEL	DESCRIPTION
16	RJPL-24x32	CTS RELAY JUDGING PLATFORM 24"x32" W/ BUILT-IN LED LIGHT FOR START
1	CAD-RJPL-2	CADDY- 24" WIDTH RELAY JUDGING PLATFORMS (HOLDS 10)

FULL COLOR VIDEO DISPLAY

QTY	MODEL	DESCRIPTION
4 1	SCOREBOARD (1 AQ1.11)	(UL LISTED) PROVIDE LED MATRIX DISPLAY SCOREBOARD INCLUDING ALL POWER REQUIREMENTS. BONDING AND STRUCTURAL SUPPORTS. THE SCOREBOARD SHALL HAVE FULL COLOR AND VIDEO CAPABILITIES. Y3G 12mm 256H x 448W SMD, FA, OD 2PM DISPLAY ACTIVE AREA: 120.9(H) x 211.1(W) (5) PROVIDE TEN (10) DEDICATED 20 AMP CIRCUIT TO BE TERMINATED INTO SCOREBOARD LOAD CENTER. (6) MASTER ON/OFF SCOREBOARD SWITCH WITH PILOT LIGHT W/ LOCKABLE ENCLOSURE. (7) SCOREBOARD DATA CONNECTION BOX CONNECT TO TIMING/WALL BOX LOCATION W/ 1" PVC CONDUIT.
1	ID PANEL	NON-ILLUMINATED FACILITY IDENTIFICATION PANEL WITH ARTWORK.

IDENTIFICATION STAMP
DIV. OF THE STATE ARCHITECT
APP: 02-119490 INC:
REVIEWED FOR
SS ☑ FLS ☑ ACS ☑
DATE: 09/13/2022

LPA
ARCHITECTURE ENGINEERING INTERIORS
LANDSCAPE ARCHITECTURE PLANNING

916-287-2400 Office
916-287-2401 Fax
LPADesignStudios.com
431 I Street,
Suite 107
Sacramento, California 95814

AQUATIC DESIGN GROUP
2228 Faraday Ave. Carlsbad, CA 92008
AquaticDesignGroup.com
760.438.8400

LICENSED ARCHITECT
JEFFERY S. FERRELL
C35862
REN. 07.01.23
STATE OF CALIFORNIA

This document and all other project documents, ideas, aesthetics and designs incorporated therein are instruments of service. All project documents are copyright protected, are the property of LPA, Inc. (LPA) and cannot be lawfully used in whole or in part for any project or purpose except as set forth in the contractual agreement between LPA and its Client. The unauthorized disclosure and/or use of the project documents (including the creation of derivative works), may give rise to liability for copyright infringement, unlawful disclosure, use or misappropriation of property rights held by LPA. The unauthorized use of the project documents will give rise to the recovery of monetary losses and damages including attorney fees and costs for which the unauthorized user will be held liable.
Project documents describe the design intent of the work and are not a representation of as-built or existing conditions. LPA is not responsible for any discrepancies between the project documents and the existing conditions.

© LPA, Inc.

DAVIS SR HIGH SCHOOL
AQUATICS CENTER
315 W 14TH ST., DAVIS, CA 95616

Developed for
DAVIS JOINT UNIFIED SCHOOL DISTRICT

Revision	Date

Submittal	Date
50% DD REVIEW	06/15/2021
100% DD SUBMITTAL	07/26/2021
50% CD REVIEW	10/08/2021
100% CD DSA SUBMITTAL	10/22/2021
100% CD DSA RESUBMITTAL	02/16/2022

Job Number	1904413
Date Published	10/22/2021
Checked By	SJF
Scale	1/8"=1'-0"

SWIMMING POOL UNDERWATER LIGHT/ TIMING SYSTEM PLAN

AQ1.5

1 SWIMMING POOL UNDERWATER LIGHT / TIMING SYSTEM PLAN 1/8"=1'-0"

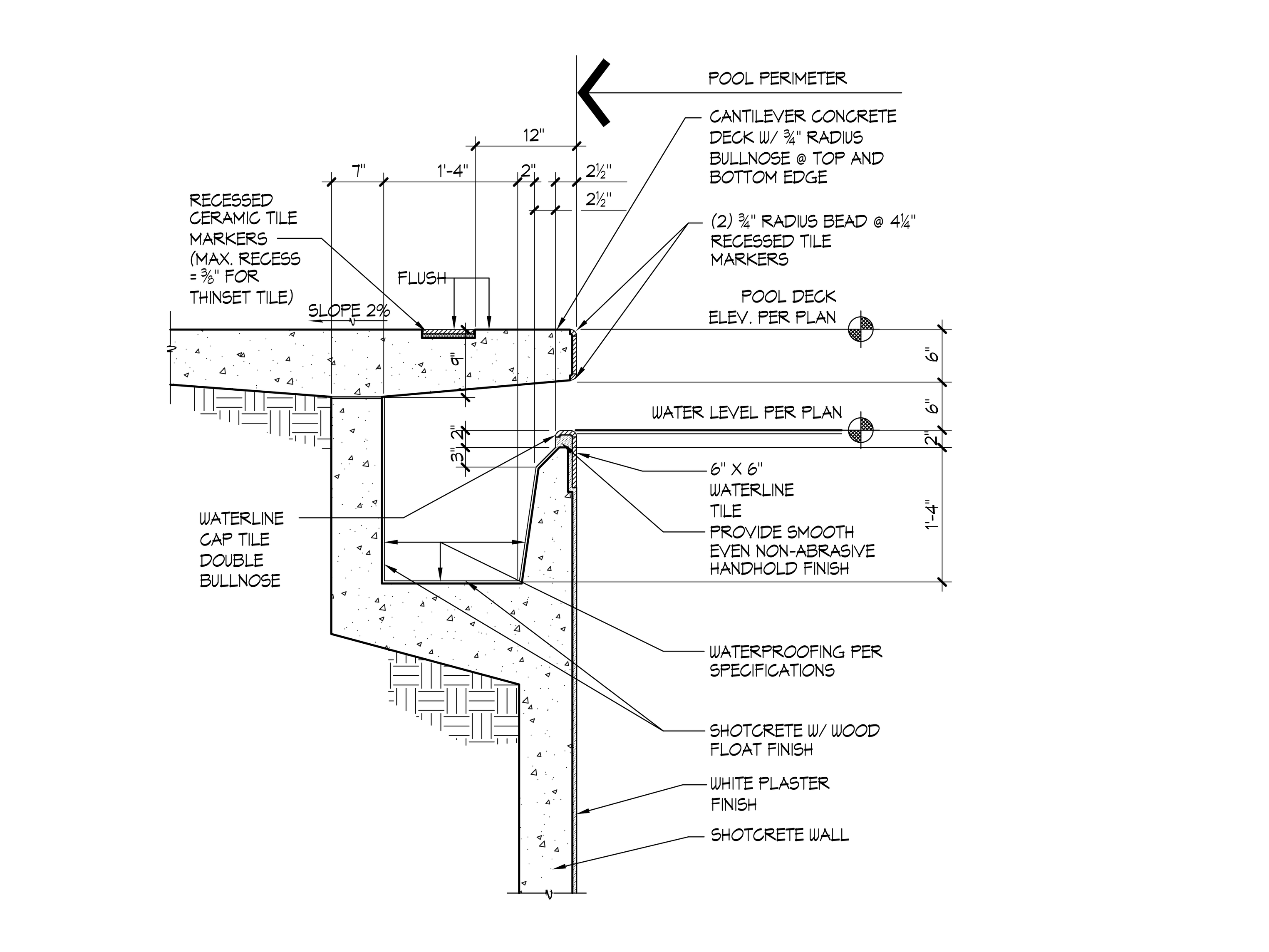

1 **TYPICAL GUTTER DETAIL** 1"=1'-0"

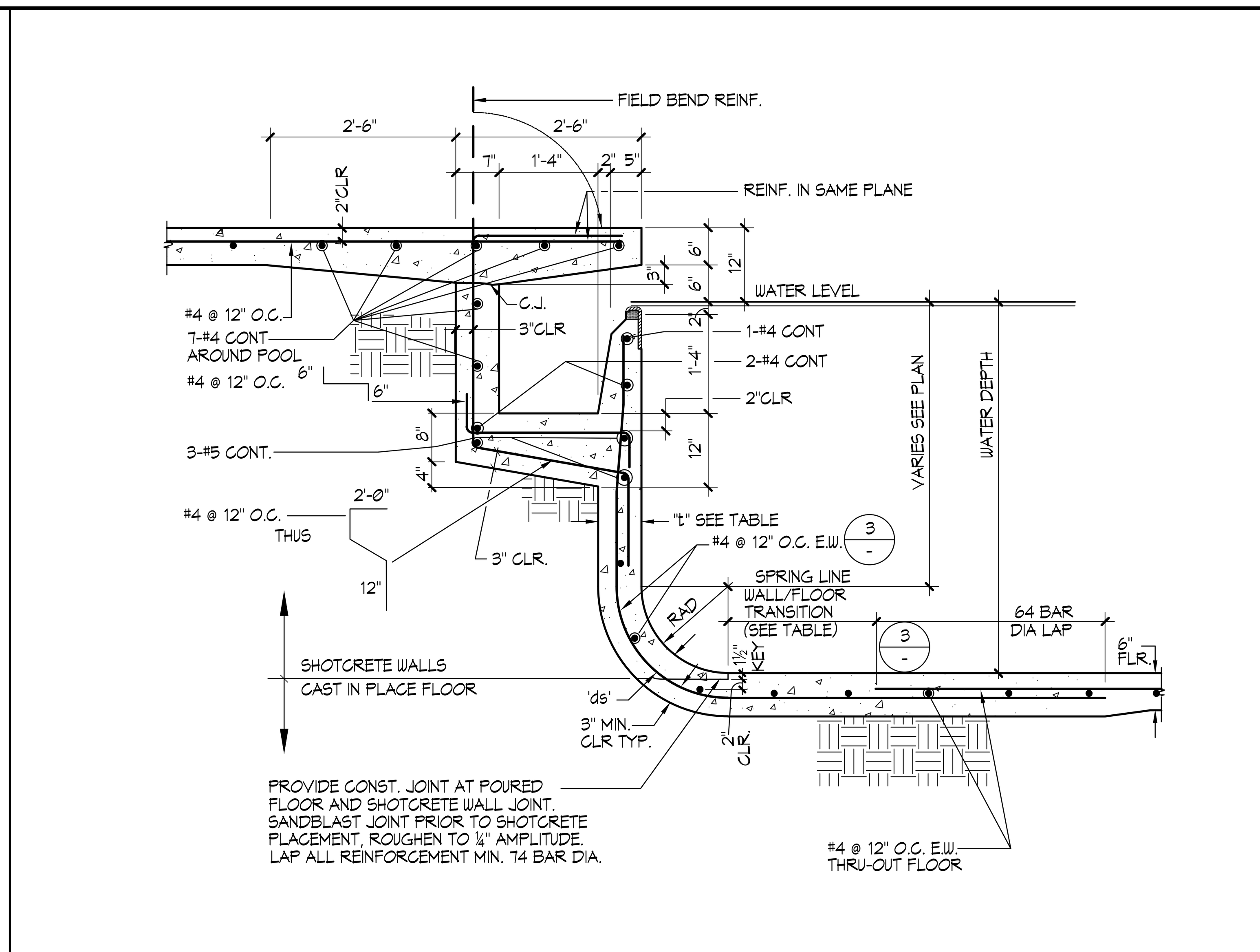

2 **POOL WALL 3'-6" TO 5'-0"** ¾"=1'-0"

REINFORCEMENT TABLE

WATER DEPTH	"t"	"ds"	RADIUS	VERTICAL REINF.	HORIZONTAL REINF.	TRANSITION TO FLOOR REINF. BEYOND END RADIUS
3'-6"	6"	3"	6"	#4 @ 12" O.C.	#4 @ 12" O.C.	24"
3'-7" TO 5'-0"	7"	4"	18"	#4 @ 12" O.C.	#4 @ 12" O.C.	24"
5'-1" TO 7'-0"	8"	5"	18" TO 2'-6"	#4 @ 6" O.C.	#4 @ 12" O.C.	24"
7'-1" TO 10'-0"	9"	6"	2'-6" TO 5'-0"	#5 @ 4" O.C.	#4 @ 8" O.C.	24"
10'-1" TO 12'-3"	14"	11"	5'-0" TO 6'-0"	#5 @ 4" O.C. REAR FACE #4 @ 12" O.C. FRONT FACE	#4 @ 12" O.C. REAR FACE #4 @ 12" O.C. FRONT FACE	24"
✳ 7'-0" CASE AT SURGE	✳ 9" 4" CLR. FROM STEEL TO OUTSIDE OF WALL START & STOPS 2'-0" FROM EITHER SIDE OF SURGE CHAMBER	✳ 5"	2'-6"	#4 @ 6" O.C.	#4 @ 12" O.C.	24"

CONCRETE NOTES:

1. THE MINIMUM ULTIMATE COMPRESSIVE STRENGTH AT 28 DAYS WITH A 0.40-0.45 MAX. WATER/CEMENT RATIO
   POOL = 4000 PSI
   SLAB-ON-GRADE = 4000 PSI
2. CONTINUOUS INSPECTION BY AN APPROVED INSPECTOR IS REQUIRED OF ALL CONCRETE PLACEMENT.
3. ALL CEMENT USED SHALL CONFORM TO A.S.T.M. C-150 TYPE II
4. FINE AND COARSE AGGREGATE SHALL CONFORM TO A.S.T.M. C-33. MAXIMUM SIZE OF AGGREGATE TO BE 1".
5. CONCRETE MIX DESIGNS SHALL BE BASED UPON ACI-318 SECTIONS 19.3.2 AND 26.4.2.
6. CONCRETE SHALL BE TESTED AND INSPECTED PER SECTION CBC 1705A.3 AND 1905A.1.15.
7. REMOVAL OF FORMS SHALL COMPLY WITH ACI-318 SECTION 26.11.2.
8. ALL REINFORCING SHALL BE ASTM A-615, GRADE 60, UNLESS OTHERWISE NOTED. LAPS SHALL BE 64 BAR DIA.

SHOTCRETE NOTES:

1. SHOTCRETE SHALL HAVE A MINIMUM COMPRESSIVE STRENGTH OF 4,000 PSI AT 28 DAYS. SHOTCRETE MATERIAL SHALL HAVE A WATER/CEMENT RATIO OF 0.40-0.45 PER ACI 506R, PART 2, PRODUCTS, SECTION 2.5.3.3, WET-MIX PROCESS.
2. CONTINUOUS INSPECTION BY AN D.S.A. APPROVED INSPECTOR IS REQUIRED OF ALL SHOTCRETE PLACEMENT.
3. ALL CEMENT USED SHALL CONFORM TO A.S.T.M. C-150 TYPE II
4. FINE AND COARSE AGGREGATE SHALL CONFORM TO A.S.T.M. C-33, AND SHALL CONFORM TO COARSE AGGREGATE GRADING NO. 2 PER ACI 506R TABLE 1.1.1. MAXIMUM SIZE OF AGGREGATE TO BE ⅜".
5. SHOTCRETE MIX DESIGNS SHALL BE PER CBC SECTION 1908A.2.
6. SHOTCRETE SHALL BE TESTED AND INSPECTED PER CBC SECTION 1908A.10 AND 1705A.3.
7. ANCHOR BOLTS, ANCHORS, DOWELS, INSERTS, ETC. SHALL BE SECURELY TIED IN PLACE PRIOR TO PLACING OF SHOTCRETE.
8. ALL REINFORCEMENT WITHIN SHOTCRETE SHALL MAINTAIN MINIMUM 2" CLEAR NON-CONTACT SPLICES.
9. THE FILM OF LAITANCE WHICH FORMS ON THE SURFACE OF THE SHOTCRETE SHALL BE REMOVED WITHIN APPROXIMATELY TWO HOURS AFTER APPLICATION BY BRUSHING WITH A STIFF BROOM. IF THIS IS NOT REMOVED WITHIN TWO HOURS, IT SHALL BE REMOVED BY THOROUGH WIRE BRUSHING OR SAND BLASTING. CONSTRUCTION JOINTS OVER EIGHT HOURS OLD SHALL BE THORUGHLY CLEANED WITH AIR AND WATER PRIOR TO RECEIVING SHOTCRETE.
10. ALL REINFORCING SHALL BE ASTM A-615, GRADE 60, UNLESS OTHERWISE NOTED. LAPS SHALL BE 64 BAR DIA.

3 **REINFORCEMENT TABLE**

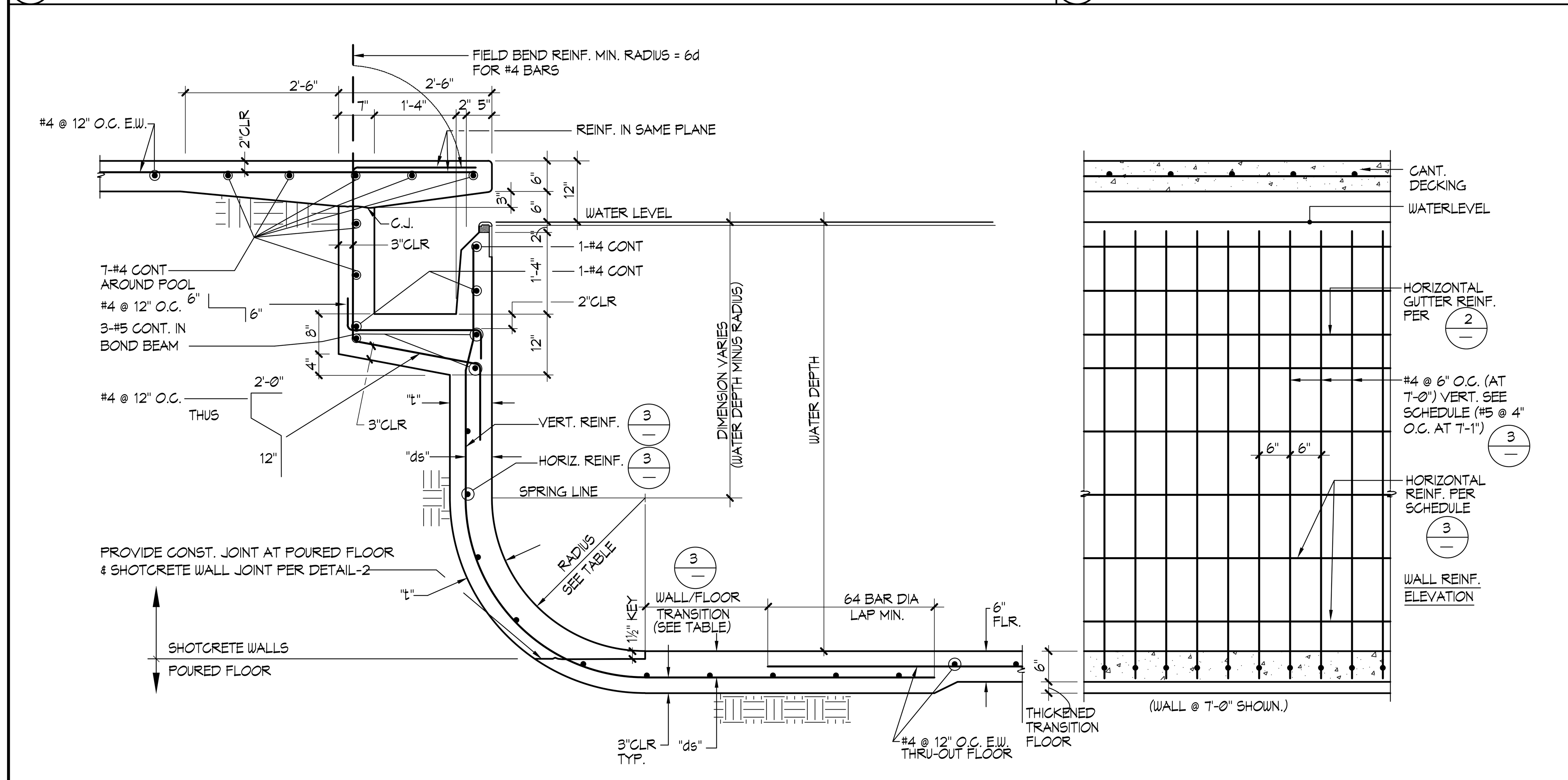

4 **POOL WALL 5'-1" TO 10'-0"** ¾"=1'-0"

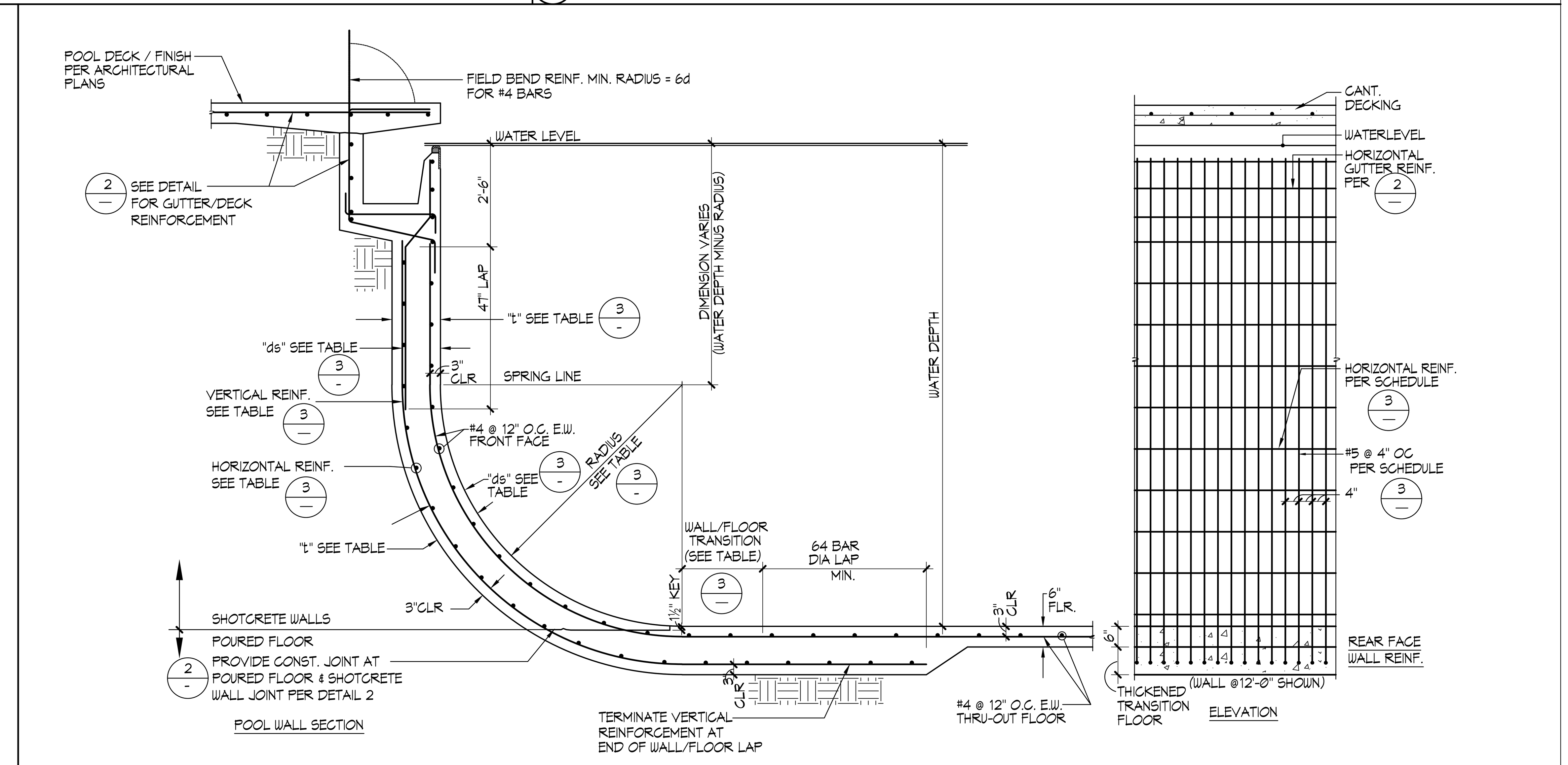

5 **POOL WALL 10'-1" TO 12'-3"** ½"=1'-0"

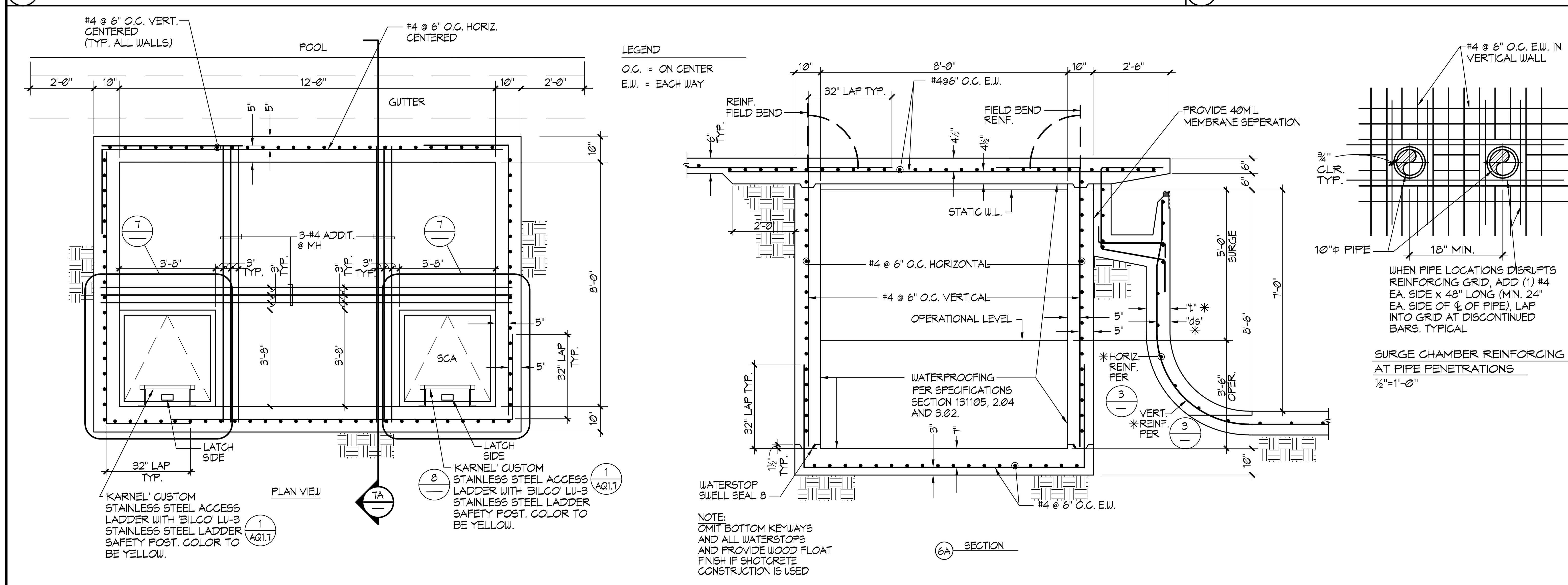

6 **SURGE CHAMBER** ½"=1'-0"

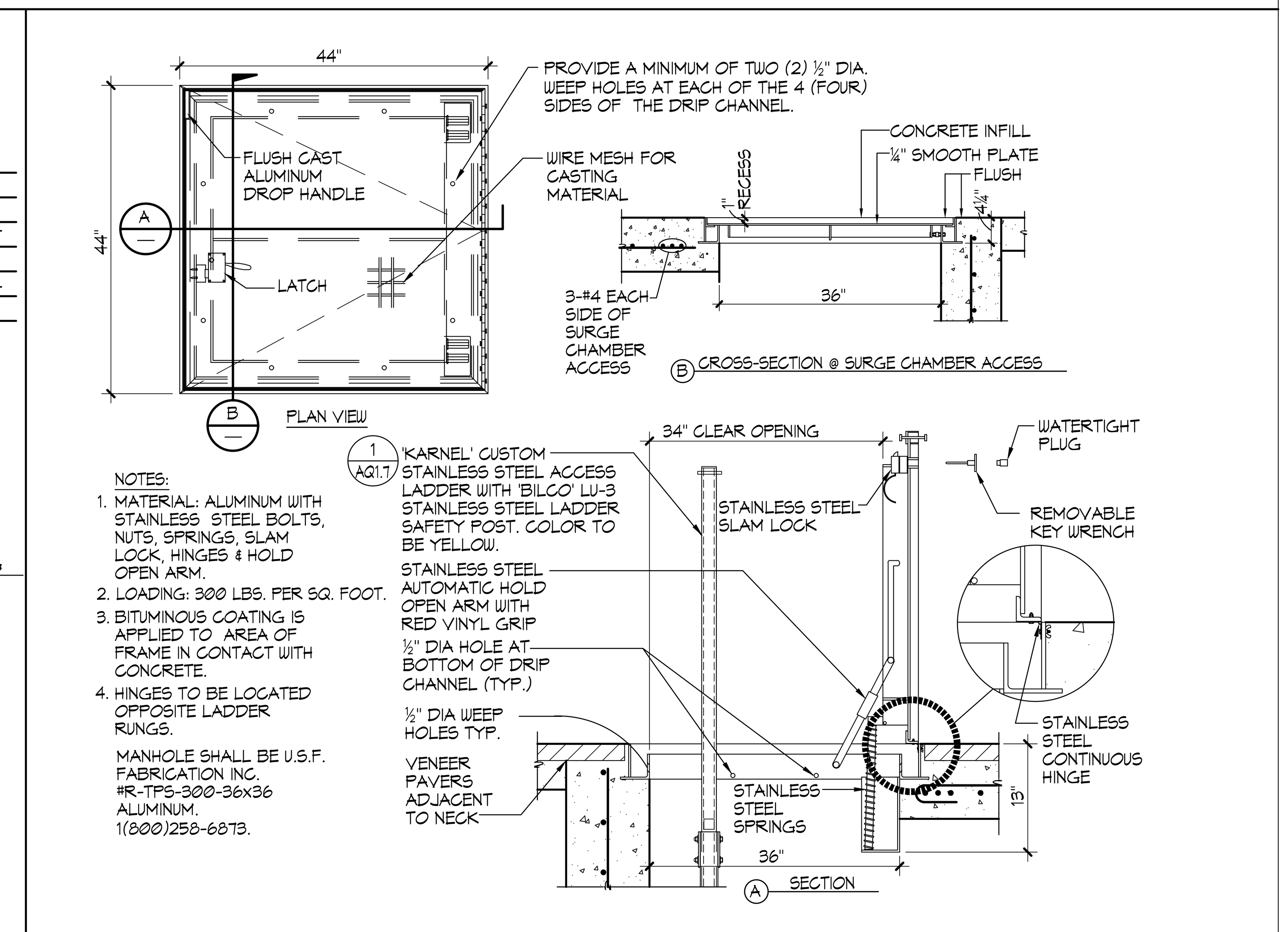

7 **SURGE CHAMBER ACCESS COVER** ¾"=1'-0"

IDENTIFICATION STAMP DIV. OF THE STATE ARCHITECT
APP: 02-119490 INC:
REVIEWED FOR SS ☑ FLS ☑ ACS ☑
DATE: 09/13/2022

LPA
ARCHITECTURE ENGINEERING INTERIORS LANDSCAPE ARCHITECTURE PLANNING
916-287-2400 Office
916-287-2401 Fax
LPADesignStudios.com
431 I Street, Suite 107 Sacramento, California 95814

AQUATIC DESIGN GROUP
2226 Faraday Ave. Carlsbad, CA 92008

LICENSED ARCHITECT C35802 REN. 07/31/23 STATE OF CALIFORNIA

This document and all other project documents, ideas, aesthetics and designs incorporated therein are instruments of service. All project documents are copyright protected, are the property of LPA, Inc. (LPA) and cannot be lawfully used in whole or in part for any project or purpose except as set forth in the contractual agreement between LPA and its Client. The unauthorized disclosure and/or use of the project documents (including the creation of derivative works), may give rise to liability for copyright infringement, unlawful disclosure, use or misappropriation of property rights held by LPA. The unauthorized use of the project documents will give rise to the recovery of monetary losses and damages including attorney fees and costs for which the unauthorized user will be held liable. Project documents describe the design intent of the work and are not a representation of as-built or existing conditions. LPA is not responsible for any discrepancies between the project documents and the existing conditions.
© LPA, Inc.

DAVIS SR HIGH SCHOOL AQUATICS CENTER
315 W 14TH ST., DAVIS, CA 95616
Developed for DAVIS JOINT UNIFIED SCHOOL DISTRICT

Submittal	Date
50% DD REVIEW	06/15/2021
50% DD SUBMITTAL	07/28/2021
100% CD REVIEW	10/06/2021
100% CD DSA SUBMITTAL	10/22/2021

Job Number	1904413
Date Published	10/22/2021
Checked By	SJF
Scale	AS NOTED

DETAILS

AQ1.6

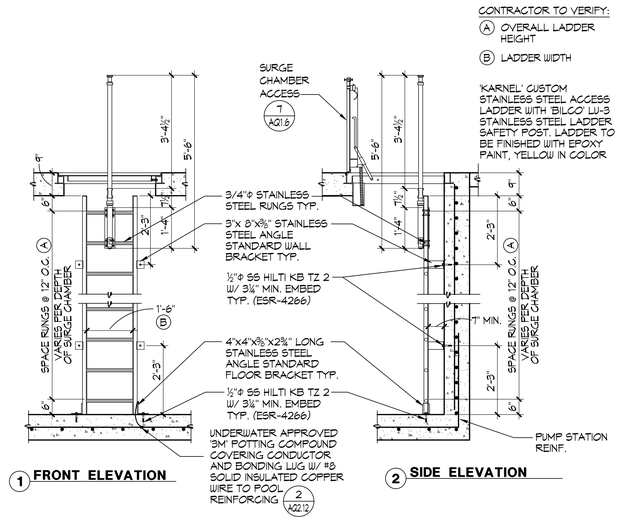

1 SURGE CHAMBER ACCESS LADDER

½" = 1'-0"

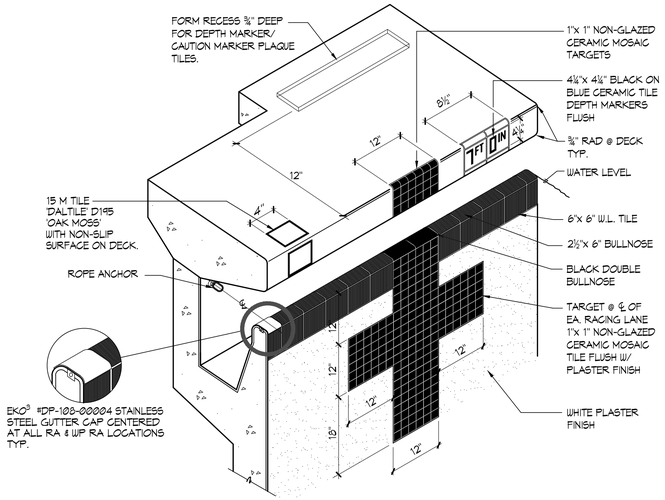

2 DEEP GUTTER PERSPECTIVE

NO SCALE

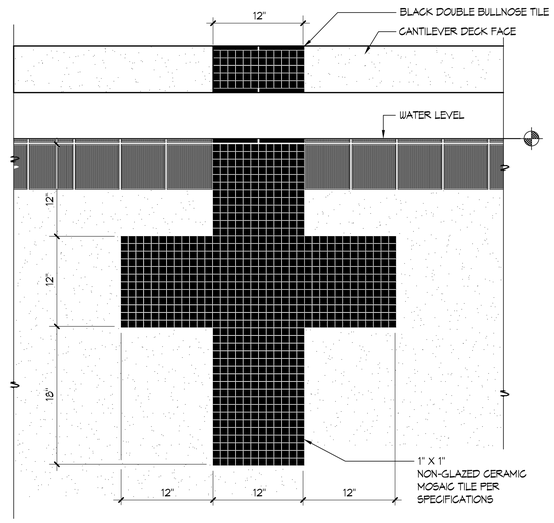

3 END WALL TARGET

1½" = 1'-0"

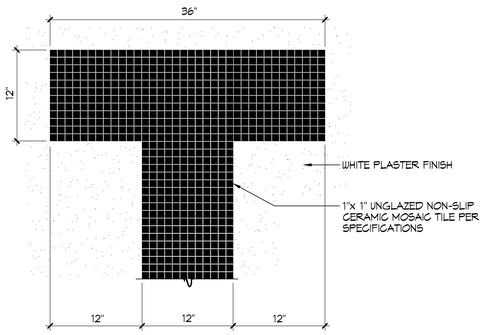

PLAN VIEW

4 RACING LANE LINE

1½"=1'-0"

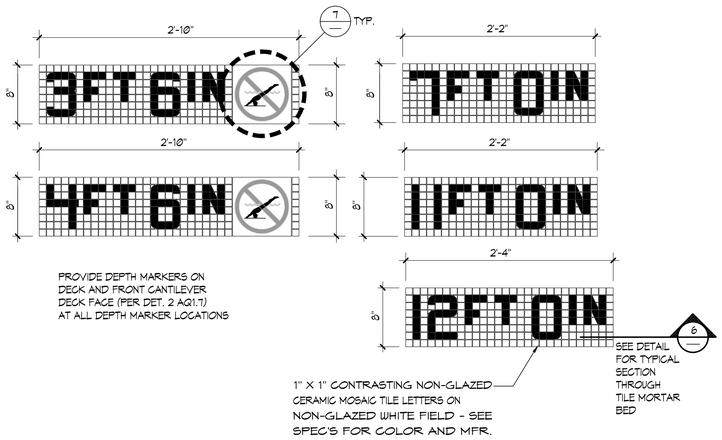

5 DEPTH MARKERS

1½" = 1'-0"

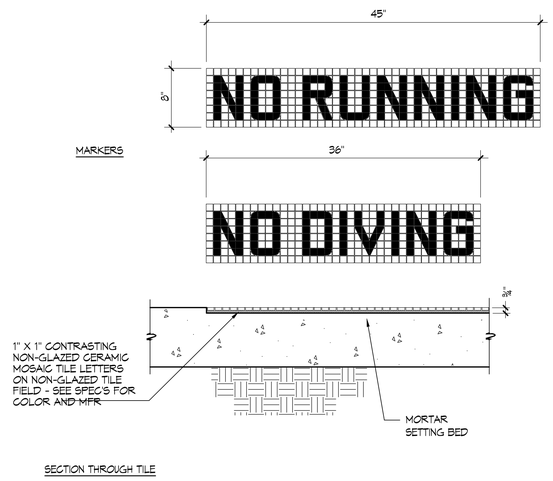

6 "NO RUNNING" / "NO DIVING" MARKERS

1½" = 1'-0"

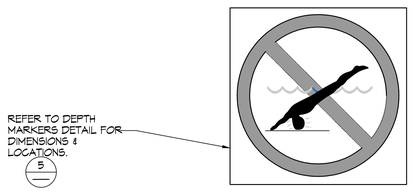

NOTE: PLACE IN DECK AT ALL DEPTH MARKER LOCATION OF 6'-0" OR LESS.

SILK SCREEN

1. INLAYS DOUBLE GLAZED WHITE SLIP RESISTANT TILE TYP. OF (1) PIECE OVER ¼" MORTAR BED WITH 1/16" GROUT JOINTS. SEE PLAN FOR LOCATION.
2. 1" WIDE RED CIRCLE WITH 1" WIDE RED DIAGONAL LINE.
3. ⅛" BLUE WATER.
4. 1/16" RED TICKS ABOUT THE HEAD.
5. TAN COLOR BODY WITH BLACK OUTLINE, HAIR AND TRUNKS.
6. ⅛" BLACK POOL FLOOR.

7 INTERNATIONAL "NO DIVING" MARKER

3"=1'-0"

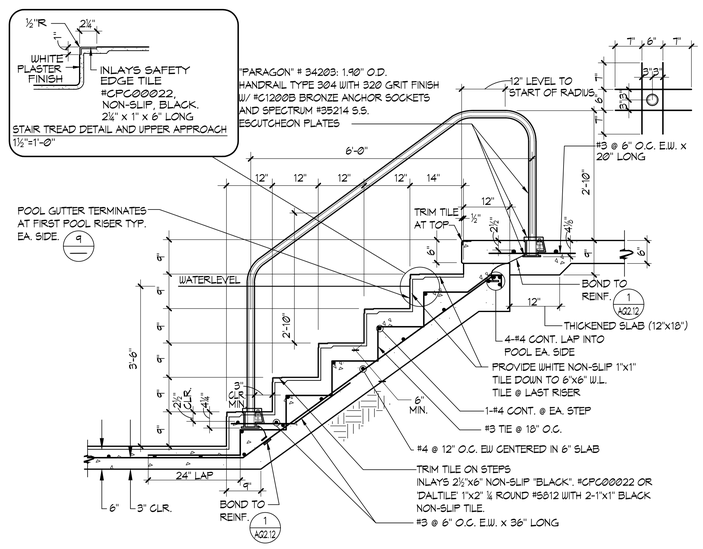

8 HANDRAIL DETAIL

¾"=1'-0"

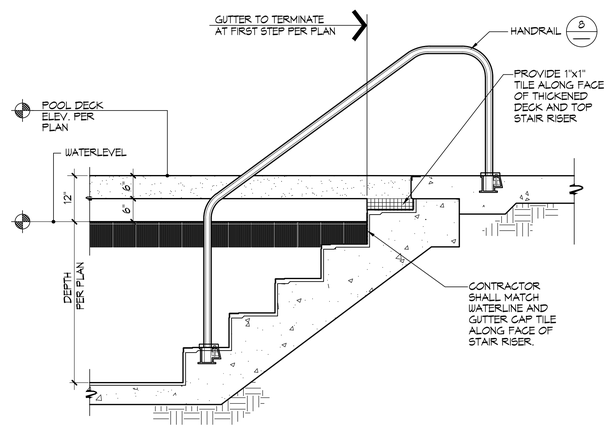

9 GUTTER EDGE AT STAIRS

¾"=1'-0"

IDENTIFICATION STAMP
DIV. OF THE STATE ARCHITECT
APP: 02-119490 INC:
REVIEWED FOR
SS ☑ FLS ☑ ACS ☑
DATE: 09/13/2022

LPA

ARCHITECTURE ENGINEERING INTERIORS
LANDSCAPE ARCHITECTURE PLANNING

916-287-2400 Office
916-287-2401 Fax
LPADesignStudios.com
431 I Street,
Suite 107
Sacramento, California 95814

AQUATIC DESIGN GROUP
2228 Faraday Ave. Carlsbad, CA 92008
AquaticDesignGroup.com
760-438.8400

LICENSED ARCHITECT
CHRISTOPHER S. FERRELL
C35802
REN. 09/01/22
STATE OF CALIFORNIA

This document and all other project documents, ideas, aesthetics and designs incorporated therein are instruments of service. All project documents are copyright protected, are the property of LPA, Inc. (LPA) and cannot be lawfully used in whole or in part for any project or purpose except as set forth in the contractual agreement between LPA and its Client. The unauthorized disclosure and/or use of the project documents (including the creation of derivative works), may give rise to liability for copyright infringement, unlawful disclosure, use or misappropriation of property rights held by LPA. The unauthorized use of the project documents will give rise to the recovery of monetary losses and damages including attorney fees and costs for which the unauthorized user will be held liable.
Project documents describe the design intent of the work and are not a representation of as-built or existing conditions. LPA is not responsible for any discrepancies between the project documents and the existing conditions.

© LPA, Inc.

DAVIS SR HIGH SCHOOL
AQUATICS CENTER
315 W 14TH ST., DAVIS, CA 95616

Developed for
DAVIS JOINT UNIFIED SCHOOL DISTRICT

Revision	Date

Submittal	Date
50% DD REVIEW	06/15/2021
100% DD SUBMITTAL	07/26/2021
50% CD REVIEW	10/08/2021
100% CD DSA SUBMITTAL	10/22/2021

Job Number	1904413
Date Published	10/22/2021
Checked By	SJF
Scale	AS NOTED

DETAILS

AQ1.7

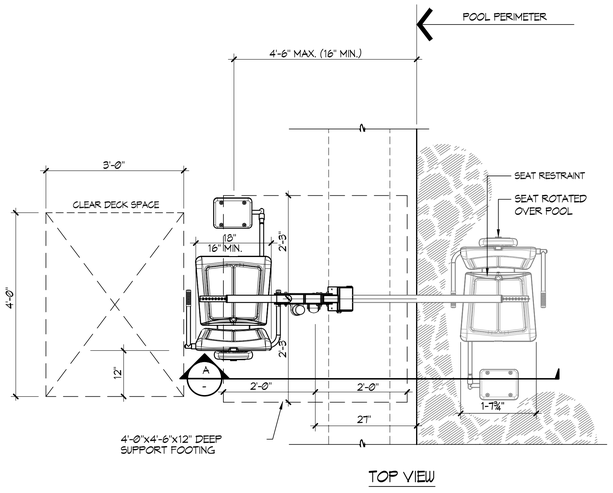

TOP VIEW

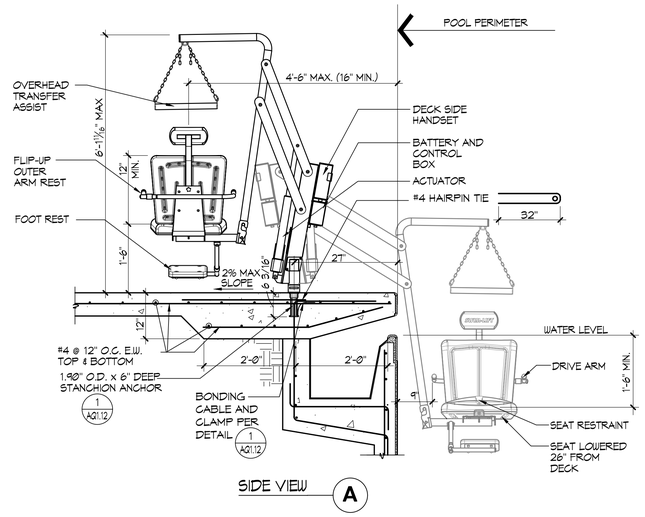

SIDE VIEW A

NOTES:

1. 'SPECTRUM' TRAVELER XRC 500 (350 lb. MIN. AND 500 lb. MAX. LIFTING CAPACITY)
2. GUSSET COVER PLATE TO BE ATTACHED REQUIRING A TOOL FOR REMOVAL.
3. CONTRACTOR SHALL PROVIDE COVER FOR LIFT 'SPECTRUM' #27365; EXTRA BATTERY PACK 'SPECTRUM' #13257; AND TRANSPORTER CART 'SPECTRUM' #26060.
4. UTILIZE OUTLET IN OFFICE FOR DISABLED LIFT BATTERY CHARGE STATION. SEE AQ1.5.
5. POOL LIFT SHALL BE LOCATED WHERE THE WATER LEVEL IS AT LEAST 36" AND DOES NOT EXCEED 48" DEEP , UNLESS ENTIRE POOL IS GREATER THAT 48" DEEP. (CBC SECTION 11B-1009.2.1)
6. ON THE RAISED POSITION, THE CENTERLINE OF THE SEAT SHALL BE LOCATED OVER THE DECK AND 16" MINIMUM FROM THE EDGE OF THE POOL. THE DECK SURFACE BETWEEN THE CENTERLINE OF THE SEAT AND THE POOL EDGE SHALL HAVE A 2% MAX. SLOPE. (CBC SECTION 11B-1009.2.2)
7. CLEAR DECK SPACE SHALL BE PROVIDED ON SIDE OF SEAT OPPOSITE THE WATER PARALLEL TO THE WATER 36" WIDE x 48" MINIMUM FROM A LINE LOCATED 12" BEHIND THE REAR EDGE OF THE SEAT. THE CLEAR SPACE SHALL HAVE A 2% MAX. SLOPE. (CBC SECTION 11B-1009.2.3)
8. THE HEIGHT OF THE LIFT SEAT SHALL BE DESIGNED TO ALLOW A STOP AT 17" MIN. TO 19" MAX. MEASURED FROM THE DECK TO THE TOP OF THE SEAT SURFACE WHEN IN THE RAISED POSITION. (CBC SECTION 11B-1009.2.4)
9. THE SEAT SHALL BE RIGID AND 17" MIN. TO 19" MAX. WIDE. THE LIFT SEAT SHALL HAVE A BACK SUPPORT 12" MIN. TALL. (CBC SECTION 11B-1009.2.4)
10. FOOTRESTS SHALL BE PROVIDED, EXCEPT FOR SPA LIFTS, AND SHALL MOVE WITH THE SEAT. LIFT SHALL HAVE TWO ARMRESTS. THE ARMREST POSITIONED OPPOSITE THE WATER SHALL BE REMOVABLE OR SHALL FOLD CLEAR OF THE SEAT WHEN THE SEAT IS IN THE RAISED POSITION. (CBC SECTION 11B-1009.2.6)
11. THE LIFT SHALL BE CAPABLE OF UNASSISTED OPERATION FROM BOTH THE DECK AND WATER LEVELS. CONTROLS AND OPERATING MECHANISMS SHALL BE OPERABLE WITH ONE HAND AND SHALL BE UNOBSTRUCTED WHEN THE LIFT IS IN USE (CBC SECTION 11B-309.4). LIFT MUST BE STABLE AND NOT PERMIT UNINTENDED MOVEMENT WHEN A PERSON IS GETTING INTO OR OUT OF THE SEAT. (CBC SECTION 11B-1009.2.1)
12. THE LIFT SHALL BE DESIGNED SO THAT THE SEAT WILL SUBMERGE TO A WATER DEPTH OF 18" MIN. BELOW THE STATIONARY WATER LEVEL. (CBC SECTION 11B-1009.2.5)
13. LIFT SEAT MUST HAVE AN OCCUPANT RESTRAINT FOR USE BY THE OCCUPANT OF THE SEAT AND THE RESTRAINT MUST MEET THE STANDARDS FOR OPERABLE CONTROLS IN COMPLIANCE WITH CBC SECTION 11B-1009.2.4 AND SECTION 11B-309.

1 ACCESSIBLE LIFT

¾"=1'-0"

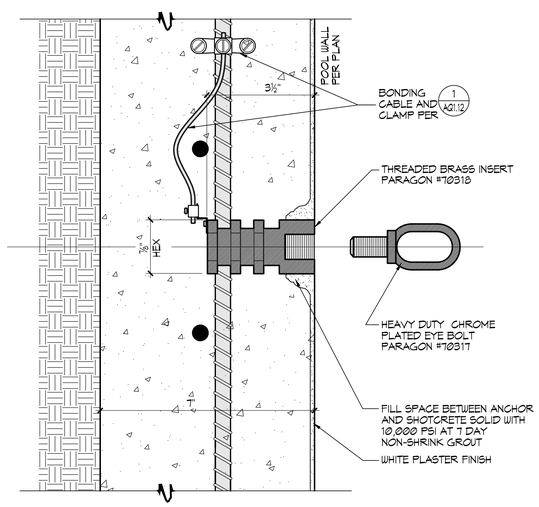

2 ROPE ANCHOR

½" = 1"

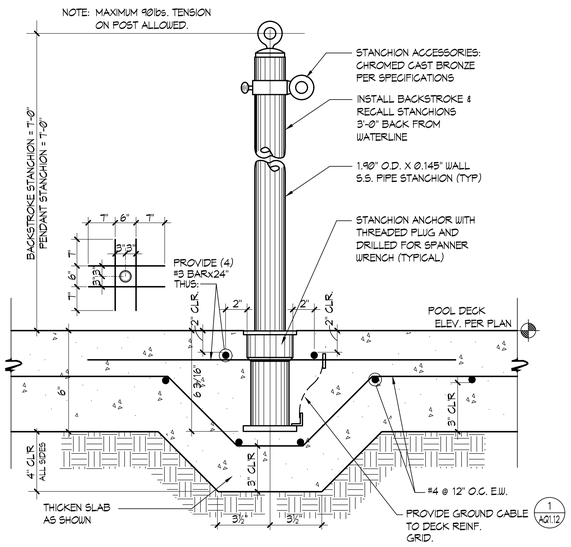

3 STANCHION POST/ANCHOR

3"=1'-0"

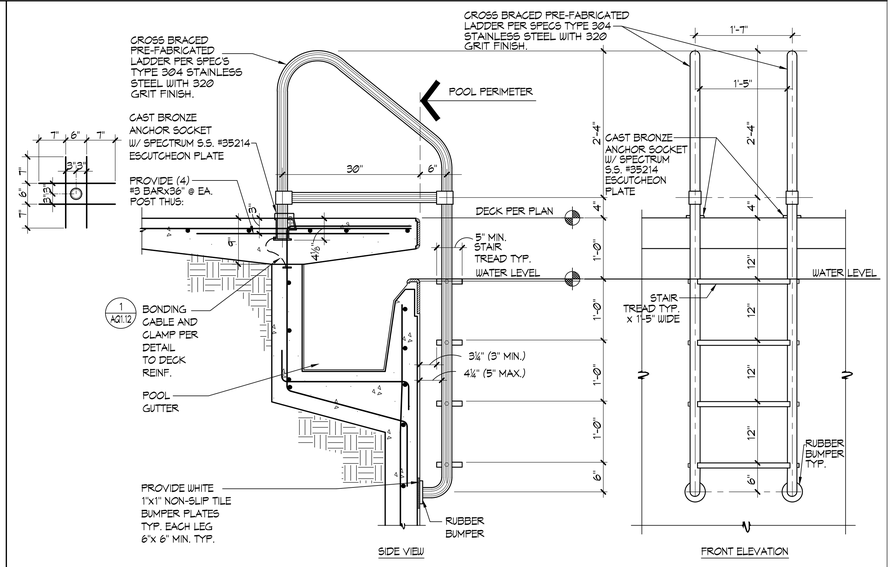

4 POOL LADDER

1"=1'-0"

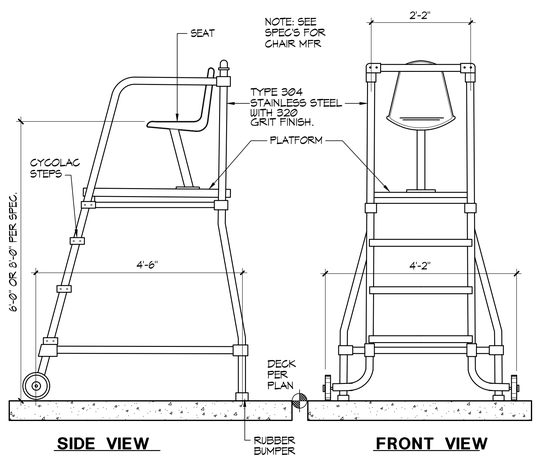

5 MOVEABLE LIFEGUARD CHAIR

¾"=1'-0"

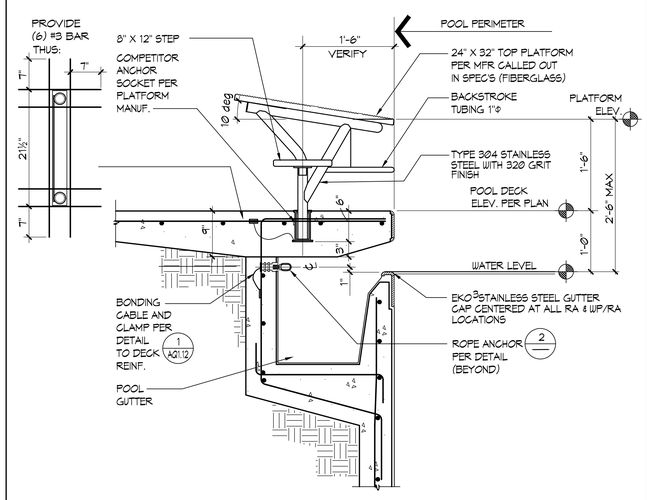

6 RACING PLATFORM

1"=1'-0"

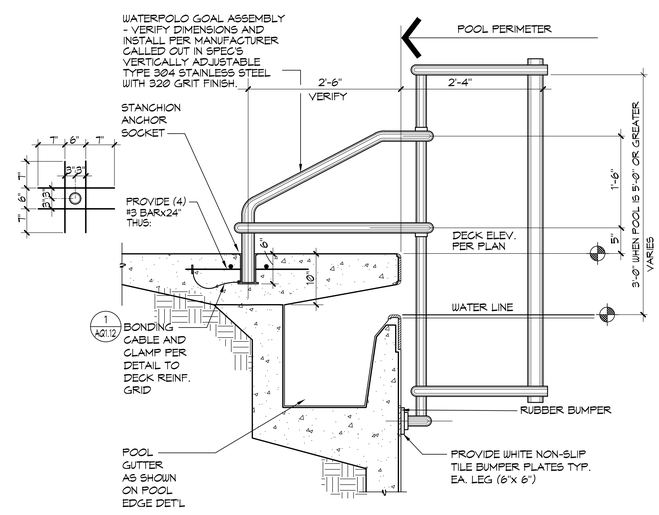

7 WATERPOLO GOAL

1"=1'-0"

IDENTIFICATION STAMP
DIV. OF THE STATE ARCHITECT
APP: 02-119490 INC:
REVIEWED FOR
SS ☑ FLS ☑ ACS ☑
DATE: 09/13/2022

LPA
ARCHITECTURE ENGINEERING INTERIORS
LANDSCAPE ARCHITECTURE PLANNING

916-287-2400 Office
916-287-2401 Fax
LPADesignStudios.com
431 I Street,
Suite 107
Sacramento, California 95814

AQUATIC DESIGN GROUP
2236 Faraday Ave. Carlsbad, CA 92008
AquaticDesignGroup.com
760.438.8400

LICENSED ARCHITECT
STEPHEN J. FERRITTI
C35802
Exp. MON, 07.31.23
STATE OF CALIFORNIA

This document and all other project documents, ideas, aesthetics and designs incorporated therein are instruments of service. All project documents are copyright protected, are the property of LPA, Inc. (LPA) and cannot be lawfully used in whole or in part for any project or purpose except as set forth in the contractual agreement between LPA and its Client. The unauthorized disclosure and/or use of the project documents (including the creation of derivative works), may give rise to liability for copyright infringement, unlawful disclosure, use or misappropriation of property rights held by LPA. The unauthorized use of project documents will give rise to the recovery of monetary losses and damages including attorney fees and costs for which the unauthorized user will be held liable. Project documents describe the design intent of the work and are not a representation of as-built or existing conditions. LPA is not responsible for any discrepancies between the project documents and the existing conditions.

© LPA, Inc.

DAVIS SR HIGH SCHOOL
AQUATICS CENTER
315 W 14TH ST., DAVIS, CA 95616

Developed for
DAVIS JOINT UNIFIED SCHOOL DISTRICT

Revision	Date

Submittal	Date
50% DD REVIEW	06/15/2021
100% DD SUBMITTAL	07/26/2021
50% CD REVIEW	10/08/2021
100% CD DSA SUBMITTAL	10/22/2021

Job Number	1904413
Date Published	10/22/2021
Checked By	SJF
Scale	AS NOTED

DETAILS

AQ1.8

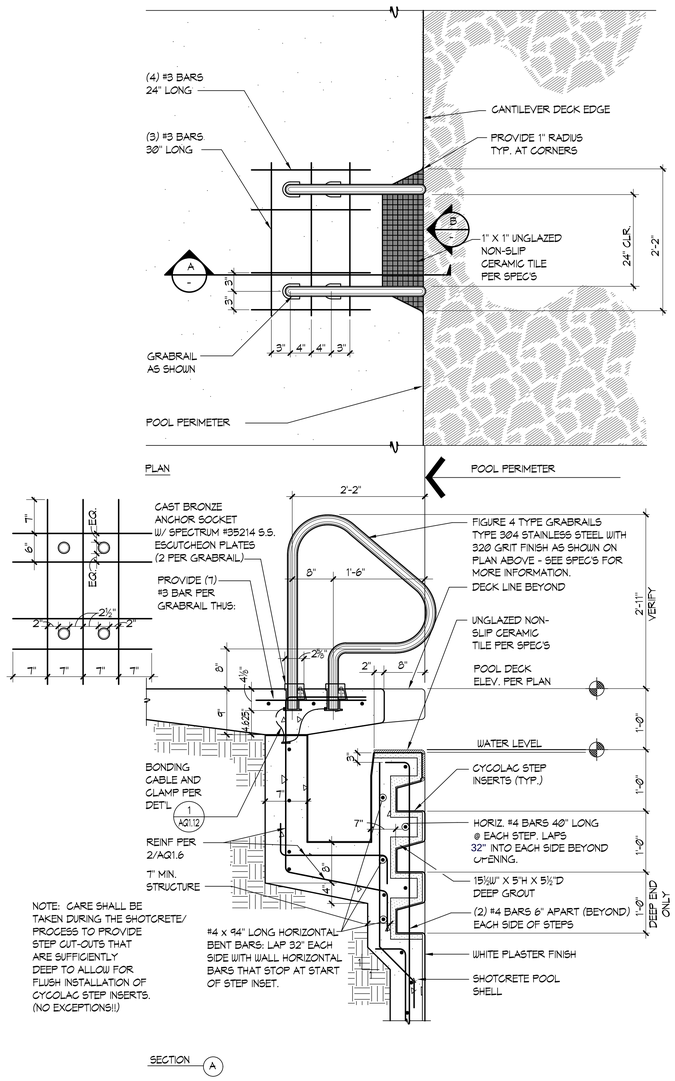

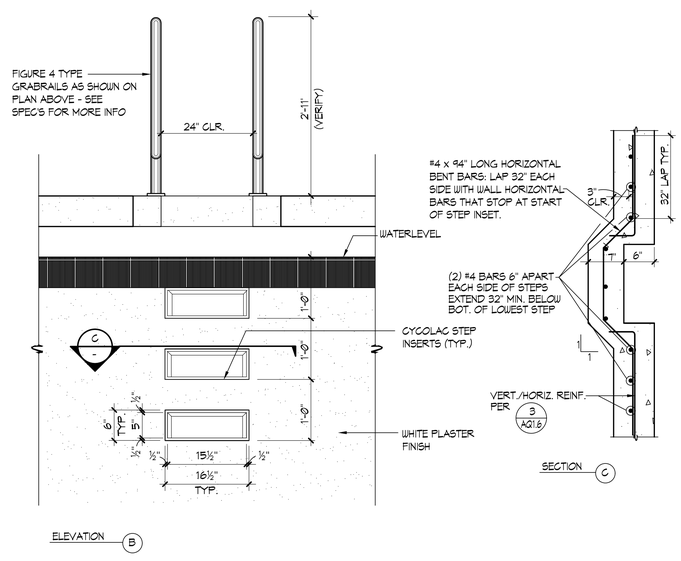

1 GRABRAIL WITH STEPS 1"=1'-0"

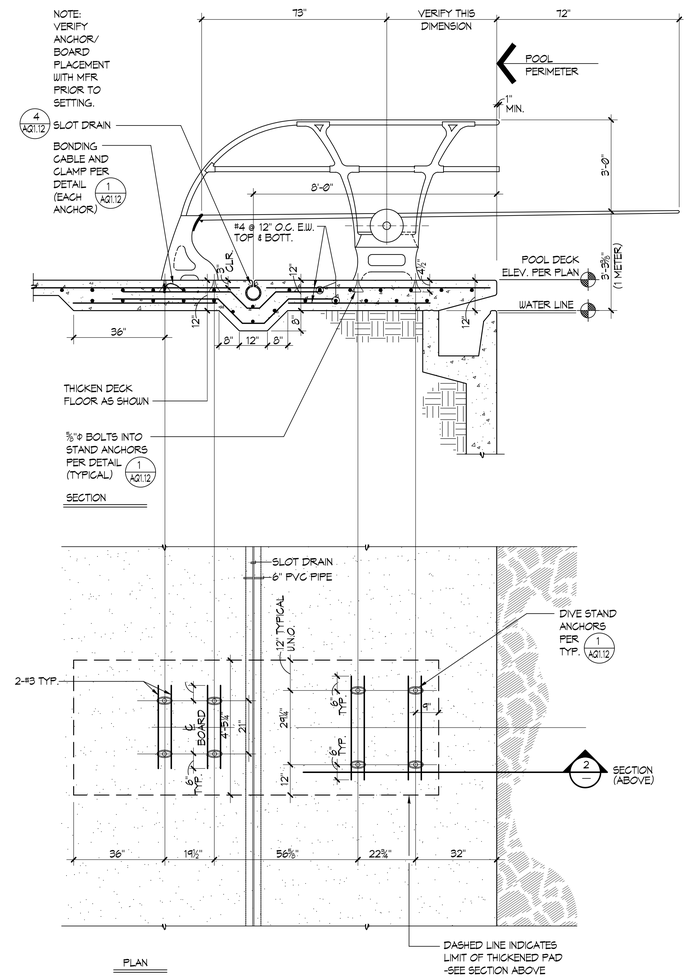

2 ONE METER DIVE STAND 1"=1'-0"

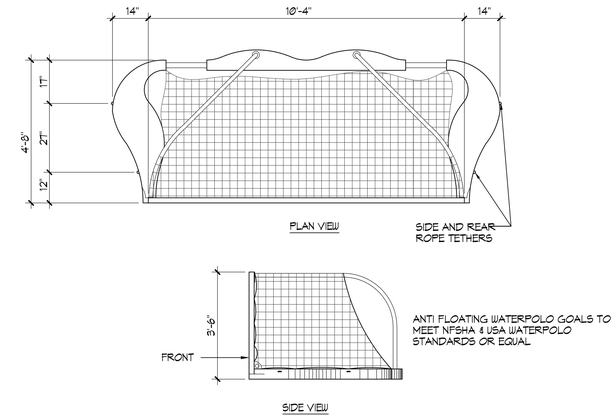

3 FLOATING WATER POLO GOALS ½"=1'-0"

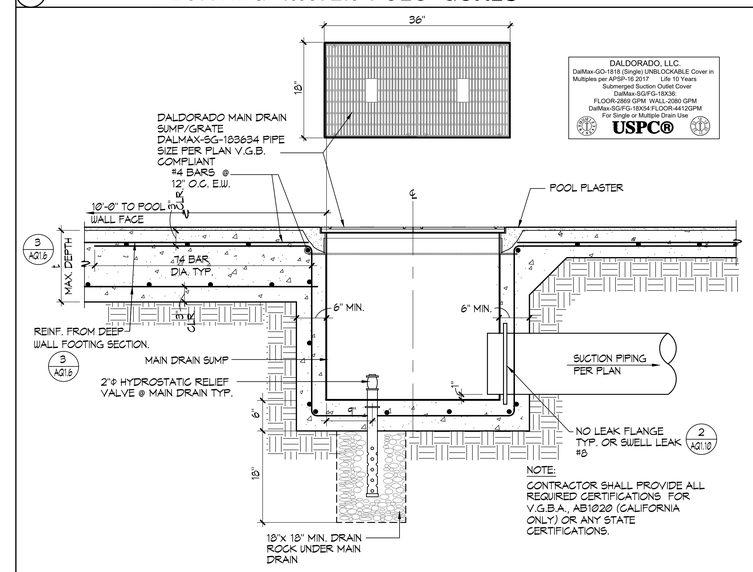

4 MAIN DRAIN 1" = 1'-0"

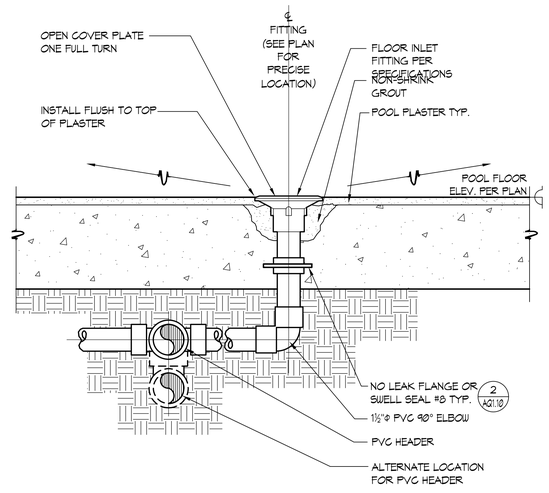

5 FLOOR INLET 3"=1'-0"

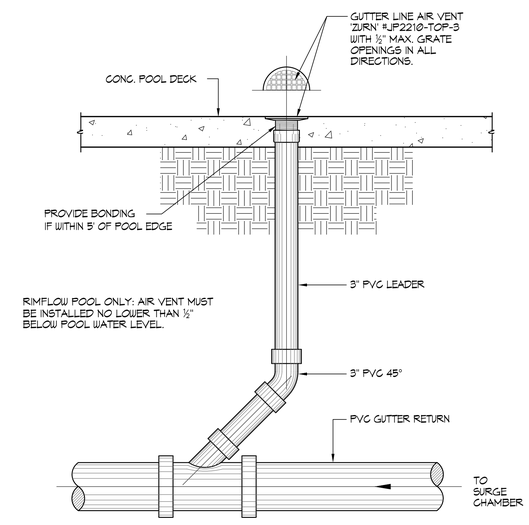

6 AIR VENT 1"=1'-0"

IDENTIFICATION STAMP
DIV. OF THE STATE ARCHITECT
APP: 02-119490 INC:
REVIEWED FOR
SS ☑ FLS ☑ ACS ☑
DATE: 09/13/2022

LPA
ARCHITECTURE ENGINEERING INTERIORS
LANDSCAPE ARCHITECTURE PLANNING
916-287-2400 Office
916-287-2401 Fax
LPADesignStudios.com
431 I Street,
Suite 107
Sacramento, California 95814

AQUATIC DESIGN GROUP
2226 Faraday Ave. Carlsbad, CA 92008
AquaticDesignGroup.com
760.438.8400

LICENSED ARCHITECT GREGORY S. FERRELL C35862 REN. 07/31/23 STATE OF CALIFORNIA

This document and all other project documents, ideas, aesthetics and designs incorporated therein are instruments of service. All project documents are copyright protected, are the property of LPA, Inc. (LPA) and cannot be lawfully used in whole or in part for any project or purpose except as set forth in the contractual agreement between LPA and its Client. The unauthorized disclosure and/or use of the project documents (including the creation of derivative works), may give rise to liability for copyright infringement, unlawful disclosure, use or misappropriation of property rights held by LPA. The unauthorized use of the project documents will give rise to the recovery of monetary losses and damages including attorney fees and costs for which the unauthorized user will be held liable. Project documents describe the design intent of the work and are not a representation of as-built or existing conditions. LPA is not responsible for any discrepancies between the project documents and the existing conditions.

© LPA, Inc.

DAVIS SR HIGH SCHOOL AQUATICS CENTER
315 W 14TH ST., DAVIS, CA 95616

Developed for
DAVIS JOINT UNIFIED SCHOOL DISTRICT

Revision	Date

Submittal	Date
50% DD REVIEW	06/15/2021
100% DD SUBMITTAL	07/26/2021
50% CD REVIEW	10/08/2021
100% CD DSA SUBMITTAL	10/22/2021

Job Number	1904413
Date Published	10/22/2021
Checked By	SJF
Scale	AS NOTED

DETAILS

AQ1.9

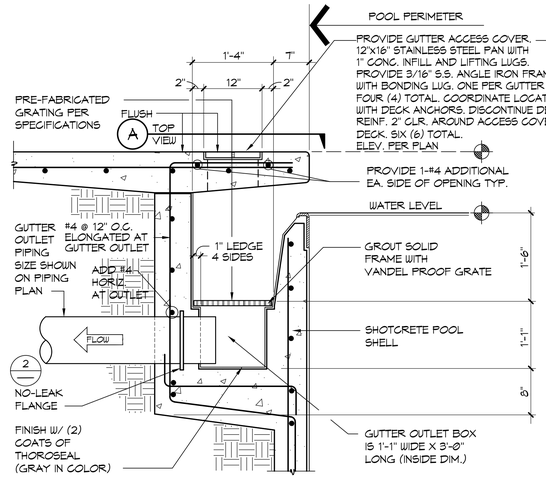

GUTTER OUTLET

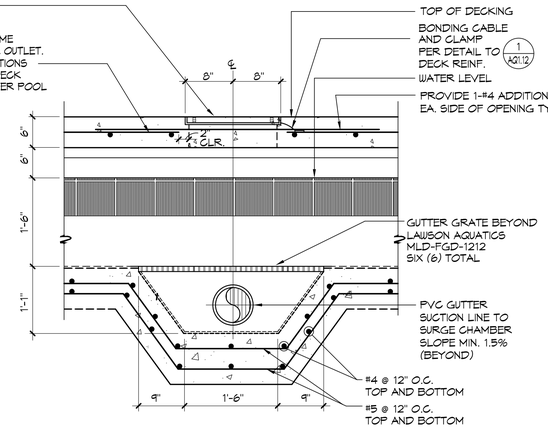

ELEVATION

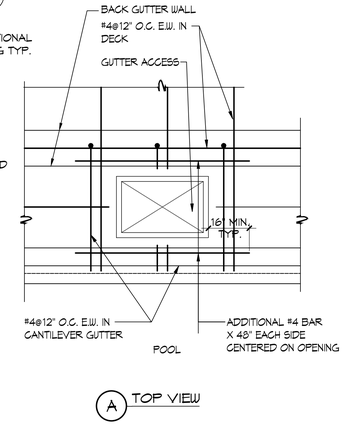

1 GUTTER OUTLET 1"=1'-0"

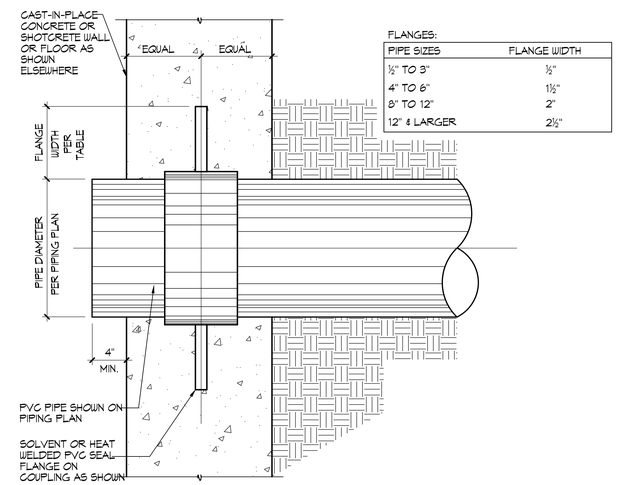

FLANGES:

PIPE SIZES	FLANGE WIDTH
½" TO 3"	½"
4" TO 6"	1½"
8" TO 12"	2"
12" & LARGER	2½"

2 WATER STOP DETAIL NO SCALE

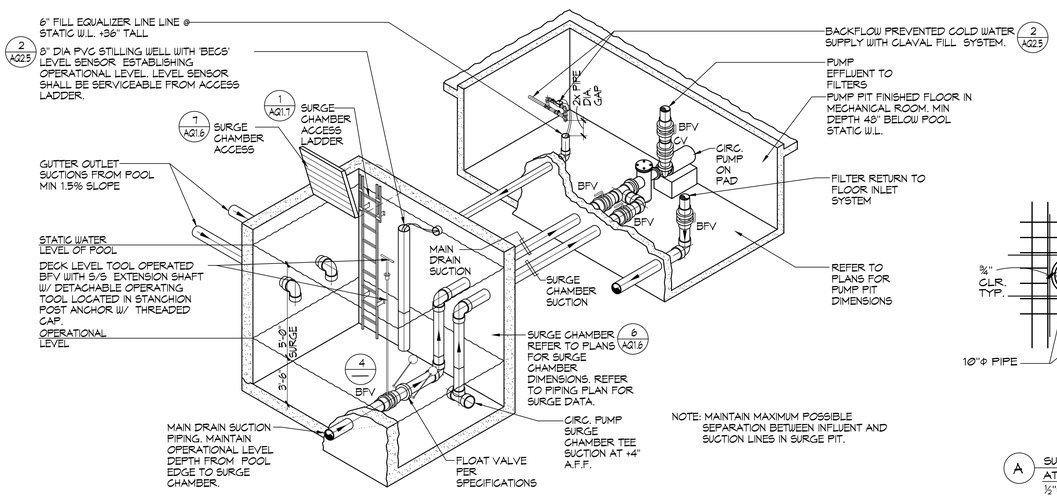

NOTE: MAINTAIN MAXIMUM POSSIBLE SEPARATION BETWEEN INFLUENT AND SUCTION LINES IN SURGE PIT.

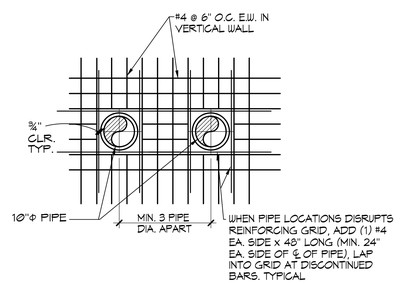

A SURGE CHAMBER REINFORCING AT PIPE PENETRATIONS
½"=1'-0"

3 SURGE CHAMBER PIPING SCHEMATIC NO SCALE

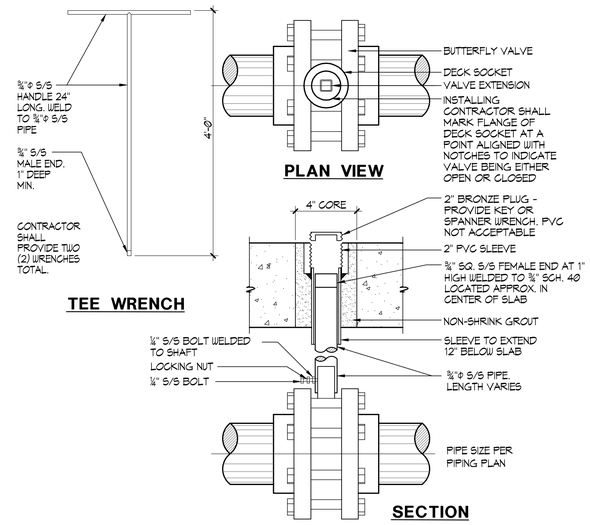

4 SURGE CHAMBER BUTTERFLY VALVE / EXTENSION DETAIL NO SCALE

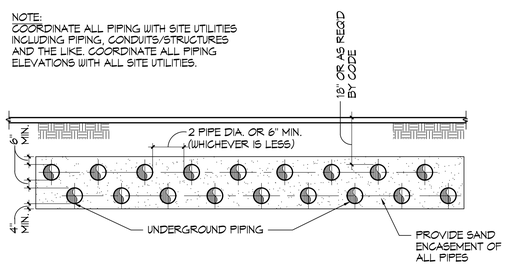

5 STACKED UNDERGROUND PIPING NO SCALE

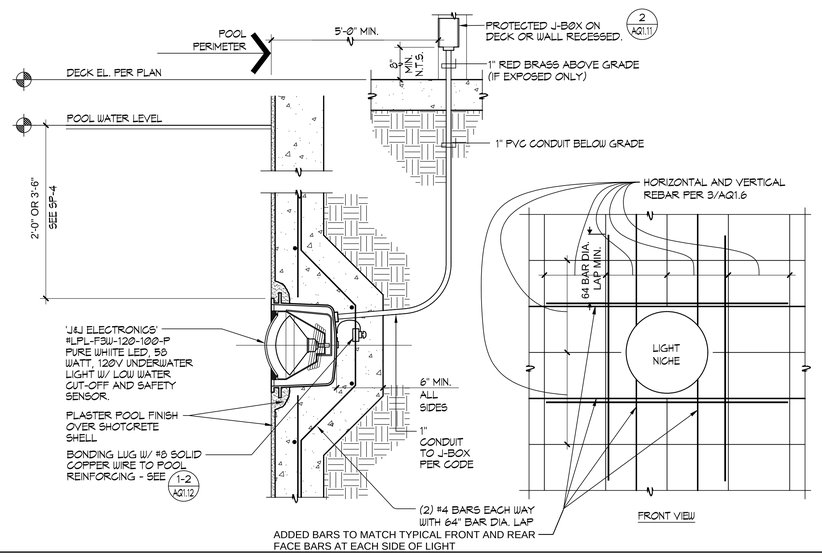

UNDERWATER LIGHT NOTES:

1. ALL CONDUITS IN POOL LIGHTING SYSTEM TO BE A MINIMUM OF 1"Φ.
2. (2/AQ1.12) CONDUCTORS TO POOL. J-BOXES SHALL BE MINIMUM 2-#8 & 1#8 (SEE UNDERWATER LIGHT PLAN) SOLID UNBROKEN TO MAIN PANEL ISOLATED GROUND BUSS. THIS BUSS IS TO BE CONNECTED WITH SOLID INSULATED #8 COPPER WIRE TO UFER & COLDWATER GROUNDING LUG ON GROUNDING BUSS. UPSIZE CONDUCTORS AS REQUIRED FOR HOMERUNS EXCEEDING 100'.
3. (2/AQ1.11) ALL BRASS POOL J-BOXES SHALL BE FLUSH MOUNTED IN WALLS. IF FLUSH MOUNTING IS NOT POSSIBLE THEN MOUNTING SHALL BE SURFACE MOUNTED AND CONCRETE ENCASED.
4. CONDUITS WHERE ALLOWED BY CODE SHALL BE P.V.C. (POLYVINYL CHLORIDE) FROM WET NICHES TO BRASS J-BOXES TO LIGHTING PANEL. ALL CONDUITS IN FREE AIR SPACE AND ALL RISERS SHALL BE RED BRASS TYPICAL. PVC CONDUITS SHALL BE SOLVENT WELDED WITH PURPLE PRIMER AND GRAY HEAVY BODIED GLUE.
5. LIGHTING CONTACTORS SHALL BE "ALLEN-BRADLEY" #500 L; OR EQUAL MOUNTED IN A NEMA 12 HINGED COVER - LOCKABLE ENCLOSURE. CONTACTORS TO BE SWITCHED BY MOMENTARY SWITCH EQUAL TO "HUBBELL" #1557 MOUNTED IN J-BOX IN MECHANICAL EQUIPMENT ROOM. REFER TO ELECTRICAL PLANS FOR LOCATION OF OWNER COORDINATED REMOTE UNDERWATER LIGHT SWITCH.
6. BRASS POOL J-BOXES SHALL BE "HYDREL" #1719 ; W/ 1" HUBS OR EQUAL. (NO DIE CAST BOXES).
7. STRINGS SHALL BE PULLED IN ALL CONDUITS PRIOR TO PLACEMENT OF CONCRETE.
8. LOCAL, COUNTY OR CITY CODES SHALL BE ADHERED TO, SPECIFICATIONS TO BE IN ACCORDANCE WITH SECTION 680 OF LATEST N.E.C. BOOK.
9. PROVIDE PULL BOXES AS MAY BE REQUIRED FOR RUNS EXCEEDING 150 FT. OR DUE TO CHANGES IN GRADE OR DIRECTION.
10. CONTRACTOR SHALL TEST UNDERWATER POOL LIGHT GFIC CIRCUITS AND PROVIDE LETTER TO OWNER/DSA UPON SUCCESSFUL TEST.
11. SEAL CONDUIT OPENING IN LIGHT NICHE WITH SILICON CAULKING AFTER LIGHT IS INSTALLED.
12. PRIOR TO LIGHT INSTALLATION, PROVIDE MINIMUM 10 PSI PRESSURE TEST ON ALL POOL LIGHT CONDUITS FOR FOUR (4) HOURS OBSERVED BY INSPECTOR OF RECORD. MAINTAIN PRESSURE UNTIL ALL DECKS ARE POURED.

6 UNDERWATER LED LIGHT 1½"=1'-0"

IDENTIFICATION STAMP
DIV. OF THE STATE ARCHITECT
APP: 02-119490 INC:
REVIEWED FOR
SS ☑ FLS ☑ ACS ☑
DATE: 09/13/2022

LPA
ARCHITECTURE ENGINEERING INTERIORS
LANDSCAPE ARCHITECTURE PLANNING
916-287-2400 Office
916-287-2401 Fax
LPADesignStudios.com
431 I Street,
Suite 107
Sacramento, California 95814

AQUATIC DESIGN GROUP
2236 Faraday Ave. Carlsbad, CA 92008
AquaticDesignGroup.com
760-438.8400

LICENSED ARCHITECT SCOTT J. FARRELL C35802 REN. 07/31/23 STATE OF CALIFORNIA

This document and all other project documents, ideas, aesthetics and designs incorporated therein are instruments of service. All project documents are copyright protected, are the property of LPA, Inc. (LPA) and cannot be lawfully used in whole or in part for any project or purpose except as set forth in the contractual agreement between LPA and its Client. The unauthorized disclosure and/or use of the project documents (including the creation of derivative works), may give rise to liability for copyright infringement, unlawful disclosure, use or misappropriation of property rights held by LPA. The unauthorized use of the project documents will give rise to the recovery of monetary losses and damages including attorney fees and costs for which the unauthorized user will be held liable. Project documents describe the design intent of the work and are not a representation of as-built or existing conditions. LPA is not responsible for any discrepancies between the project documents and the existing conditions.

© LPA, Inc.

DAVIS SR HIGH SCHOOL
AQUATICS CENTER
315 W 14TH ST., DAVIS, CA 95616

Developed for
DAVIS JOINT UNIFIED SCHOOL DISTRICT

Revision	Date

Submittal	Date
50% DD REVIEW	06/15/2021
100% DD SUBMITTAL	07/26/2021
50% CD REVIEW	10/08/2021
100% CD DSA SUBMITTAL	10/22/2021

Job Number	1904413
Date Published	10/22/2021
Checked By	SJF
Scale	AS NOTED

DETAILS

AQ1.10

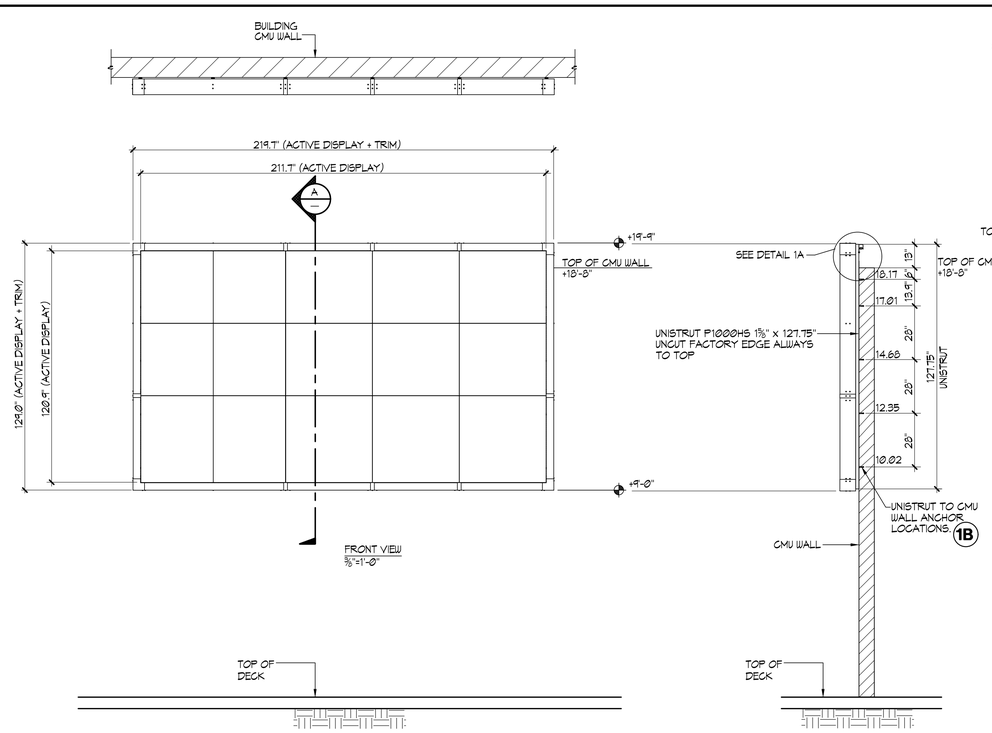

A SECTION ⅜"=1'-0"

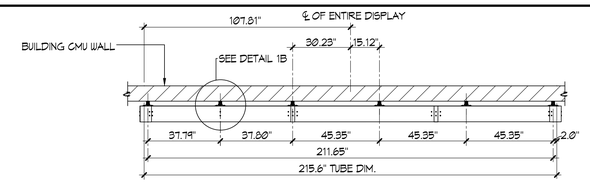

B SECTION ⅜"=1'-0"

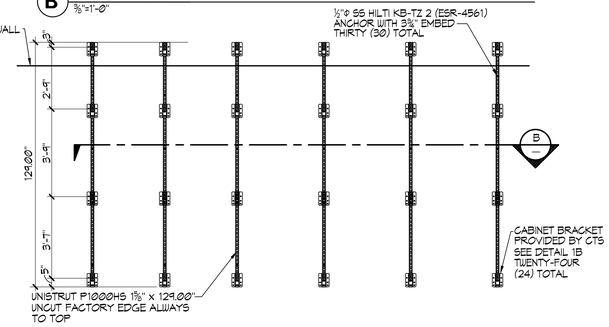

REAR VIEW ELEVATION SUPPORTS LAYOUT

⅜"=1'-0"

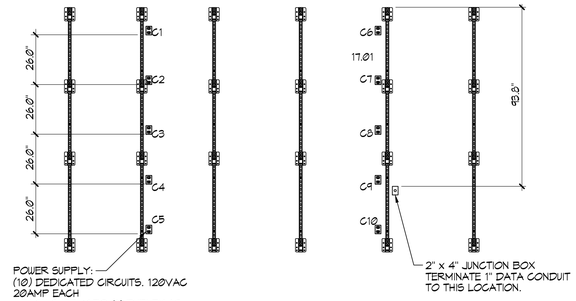

REAR VIEW ELEVATION POWER LAYOUT

⅜"=1'-0"

- EACH 2-PLEX RECEPTACLE SHALL BE 120V MIN. 20 AMP
- RECEPTACLES TO BE PLACED BEFORE CTS INSTALLATION.
- SINGLE GANG WALL BOX WITH BLANK PLATE FOR DATA CABLE. ONE PER DISPLAY.
- EACH CIRCUIT SHALL BE DEDICATED 120V. MIN. 20 AMPS. CALIFORNIA ELECTRIC CODE REQUIRES A MEANS OF DISCONNECTING SIGNS AT THE LOCATION OF THE SIGN. SCOREBOARD SHALL BE WIRED IN ACCORDANCE WITH NATIONAL ELECTRIC CODE ART. 600-6.
- IT IS EXTREMELY IMPORTANT THAT THE CIRCUITS USED TO POWER THE SCOREBOARD NOT BE SHARED WITH OTHER DEVICES. THE SCOREBOARD IS SENSITIVE TO "NOISE" ON AC POWER LINES.
- DISPLAY SHALL BE EARTH GROUNDED. NUMBER AND LENGTHS OF RODS SHALL MEET CALIFORNIA ELECTRIC CODE.
- DISPLAY MAXIMUM POWER CONSUMPTION: 12,400 WATTS

SPECIFICATIONS:

GENERAL:

- ALL STEEL CONSTRUCTION
- FINISH TO BE BLACK POWDER COAT / ENAMEL PAINT
- DIMENSIONS ARE SUBJECT TO CHANGE DUE TO DETAILED DESIGN CONSIDERATIONS. ONLY APPROVED SHOP DRAWINGS SHALL BE USED FOR CONSTRUCTION.
- DISPLAY MUST BE EARTH GROUNDED. NUMBER AND LENGTHS OF RODS SHALL MEET CALIFORNIA ELECTRIC CODE.
- DESIGN AND CONSTRUCTION OF FRAME MOUNTING STRUCTURE IS TO BE DONE BY OTHERS AND MUST MEET ALL LOCAL AND NATIONAL BUILDING CODES.

SYSTEM WEIGHTS:

- DISPLAY - APPROXIMATELY 2,420 LBS.
- FRAME AND EDGE TRIM - APPROXIMATELY 260 LBS.
- DISPLAY MOUNTING CHANNELS SHALL BE ALIGNED USING TEMPLATE.

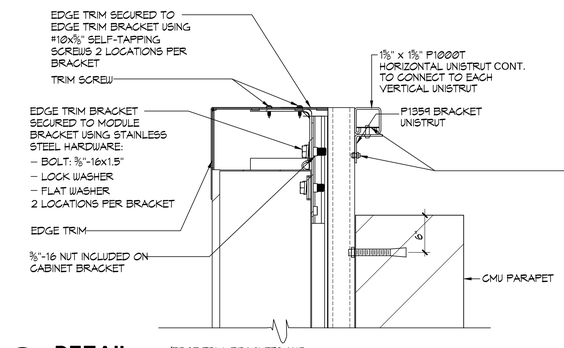

1A DETAIL NO SCALE

(EDGE TRIM, BRACKETS AND HARDWARE TO BE PROVIDED AND INSTALLED BY CTS)

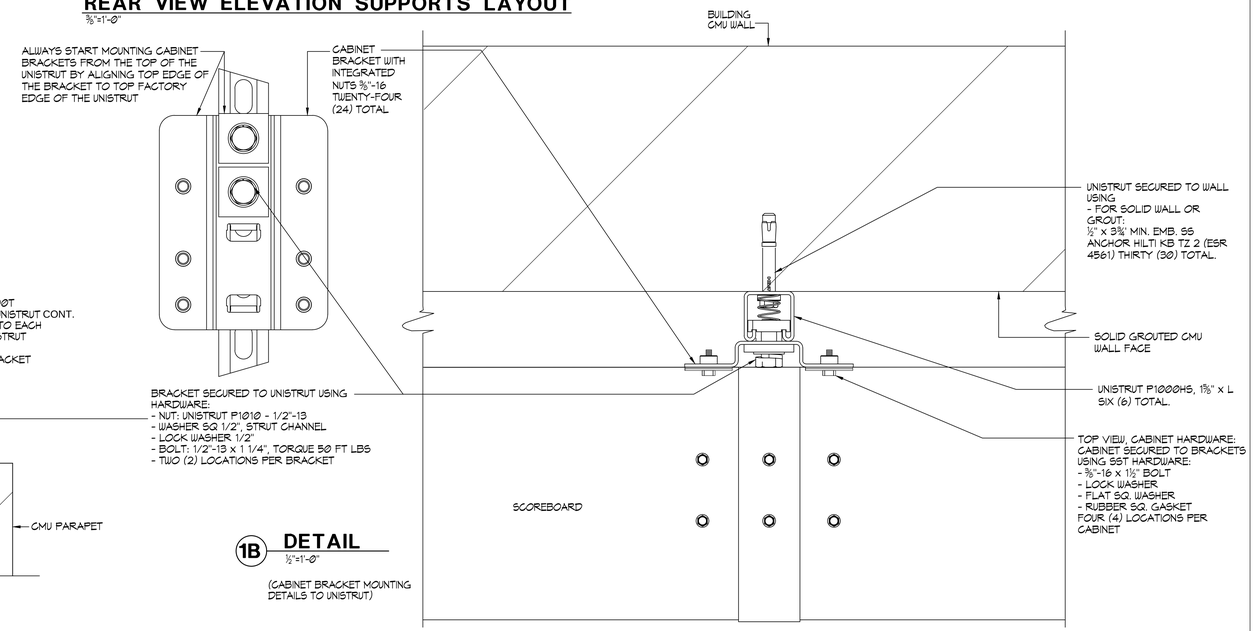

1B DETAIL ½"=1'-0"

(CABINET BRACKET MOUNTING DETAILS TO UNISTRUT)

1 SCOREBOARD DETAILS AS NOTED

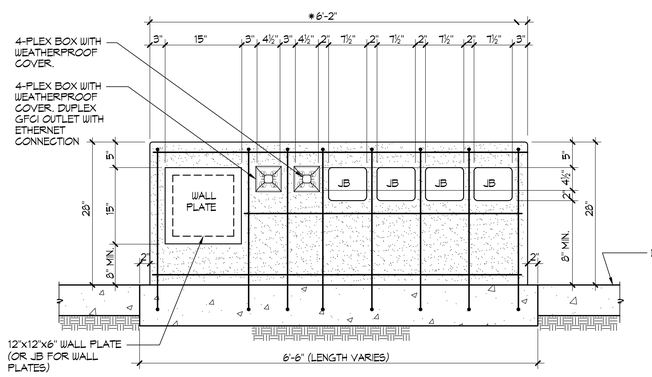

FRONT ELEVATION

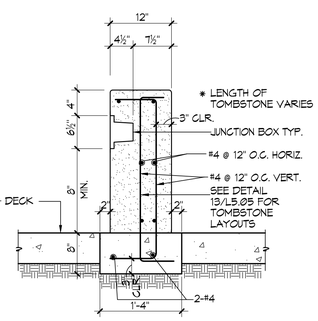

RIGHT SIDE ELEVATION

NOTE:
PROVIDE ½" RADIUS ON ALL CONCRETE CORNERS.

2 UNDERWATER LIGHT JUNCTION BOX / TIMING SYSTEM WALL PLATE CONCRETE SURROUND DETAIL 1"=1'-0"

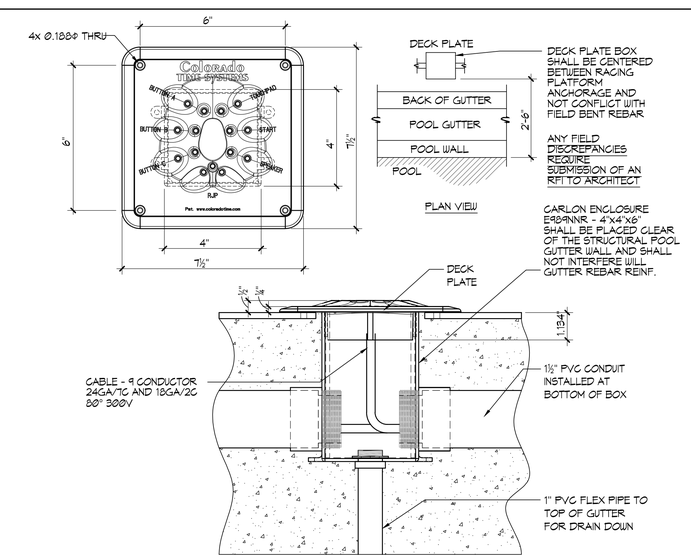

3 TITANIUM DECK PLATE DETAIL (LOCATED UNDER RACING PLATFORM) NO SCALE

IDENTIFICATION STAMP
DIV. OF THE STATE ARCHITECT
APP: 02-119490 INC:
REVIEWED FOR
SS ☑ FLS ☑ ACS ☑
DATE: 09/13/2022

LPA

ARCHITECTURE ENGINEERING INTERIORS
LANDSCAPE ARCHITECTURE PLANNING

916-287-2400 Office
916-287-2401 Fax
LPADesignStudios.com
431 I Street,
Suite 107
Sacramento, California 95814

AQUATIC DESIGN GROUP
2234 Faraday Ave. Carlsbad, CA 92008
AquaticDesignGroup.com
760.438.8400

LICENSED ARCHITECT
GREGORY S. DEMPSEY
C35802
REN. 07/31/23
STATE OF CALIFORNIA

This document and all other project documents, ideas, aesthetics and designs incorporated therein are instruments of service. All project documents are copyright protected, are the property of LPA, Inc. (LPA) and cannot be lawfully used in whole or in part for any project or purpose except as set forth in the contractual agreement between LPA and its Client. The unauthorized disclosure and/or use of the project documents (including the creation of derivative works), may give rise to liability for copyright infringement, unlawful disclosure, use or misappropriation of property rights held by LPA. The unauthorized use of the project documents will give rise to the recovery of monetary losses and damages including attorney fees and costs for which the unauthorized user will be held liable.
Project documents describe the design intent of the work and are not a representation of as-built or existing conditions. LPA is not responsible for any discrepancies between the project documents and the existing conditions.

© LPA, Inc.

DAVIS SR HIGH SCHOOL
AQUATICS CENTER
315 W 14TH ST., DAVIS, CA 95616

Developed for
DAVIS JOINT UNIFIED SCHOOL DISTRICT

Revision	Date

Submittal	Date
50% DD REVIEW	06/15/2021
100% DD SUBMITTAL	07/26/2021
50% CD REVIEW	10/08/2021
100% CD DSA SUBMITTAL	10/22/2021

Job Number	1904413
Date Published	10/22/2021
Checked By	SJF
Scale	AS NOTED

DETAILS

AQ1.11

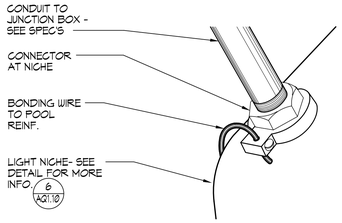

NICHE CONNECTOR

NO SCALE

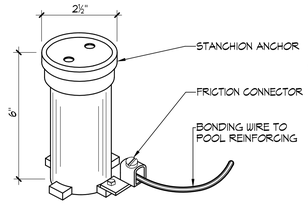

STANCHION ANCHOR

NO SCALE

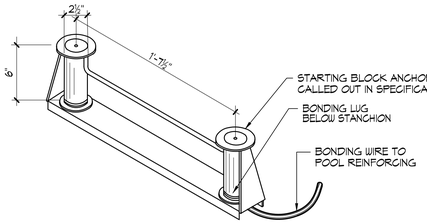

STARTING BLOCK ANCHOR

NO SCALE

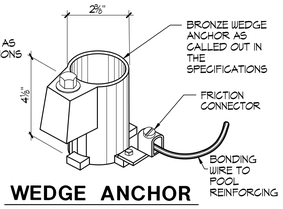

WEDGE ANCHOR

NO SCALE

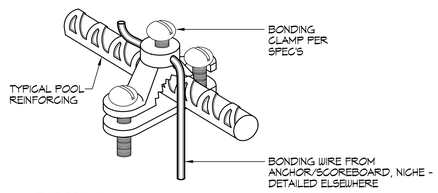

BONDING CLAMP

NO SCALE

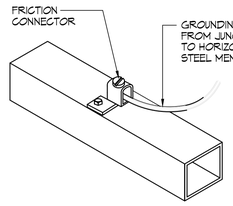

SCOREBOARD ELEC. GROUNDING

NO SCALE

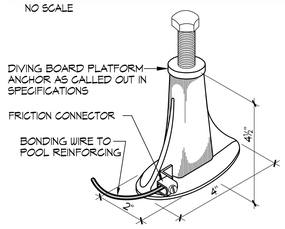

DIVING BOARD PLATFORM ANCHOR

NO SCALE

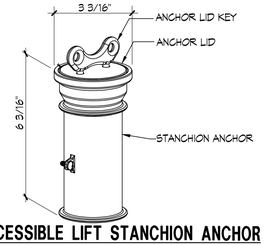

ACCESSIBLE LIFT STANCHION ANCHOR

NO SCALE

1 BONDING DETAILS

NO SCALE

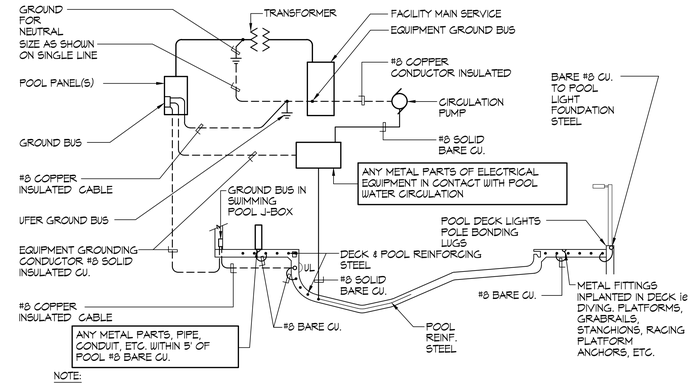

NOTE:

1. STRUCTURAL STEEL IN POOL DECK AND POOL SHALL BE BONDED TOGETHER (TIGHTLY MADE STEEL TIE-WIRES ARE APPROVED FOR BONDING STRUCTURAL ELEMENTS).
2. BONDING CONNECTOR TO COMMON GRID. (POOL STEEL MAY BE USED FOR THAT PURPOSE) SHALL BE MADE BY PRESSURE CONNECTORS OR CLAMPS OF BRASS, COPPER, OR COPPER ALLOY.
3. ALL GROUND BUSES SHALL BE SIZED FOR CONNECTION TO AWG SIZE 8 WIRE PROVIDING ONE SPARE TERMINAL.
4. GROUND AND BOND IN ACCORDANCE WITH ARTICLE 680 OF THE CALIFORNIA ELECTRICAL CODE. (e. LADDERS, FENCING, POLE LIGHTS, DIVING & STARTING STANCHIONS, DISABLED LIFT ETC.
5. PROVIDE BONDING OF AUTOMATIC POOL COVER MOTORS REGARDLESS OF PROXIMITY TO POOL.

2 TYPICAL POOL BONDING AND GROUND DETAIL

NO SCALE

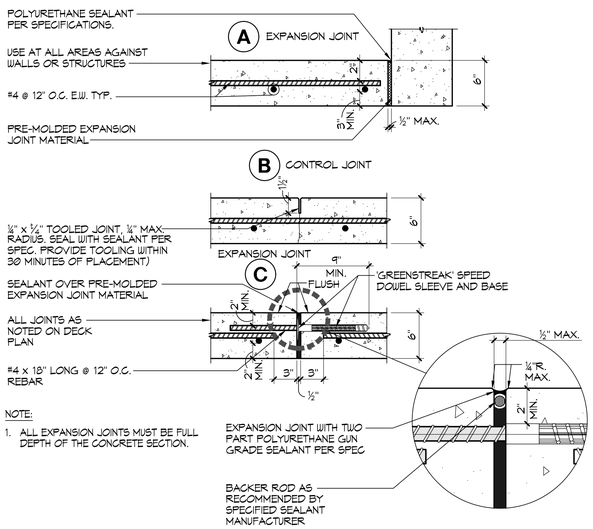

NOTE:

1. ALL EXPANSION JOINTS MUST BE FULL DEPTH OF THE CONCRETE SECTION.

3 CONCRETE DECK JOINT DETAILS

1½"=1'-0"

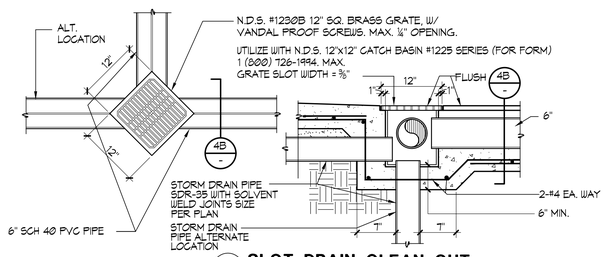

A SLOT DRAIN CLEAN OUT

1" = 1'-0"

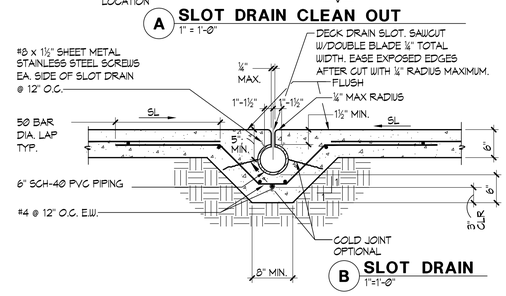

B SLOT DRAIN

1"=1'-0"

4 SLOT DRAIN

1"=1'-0"

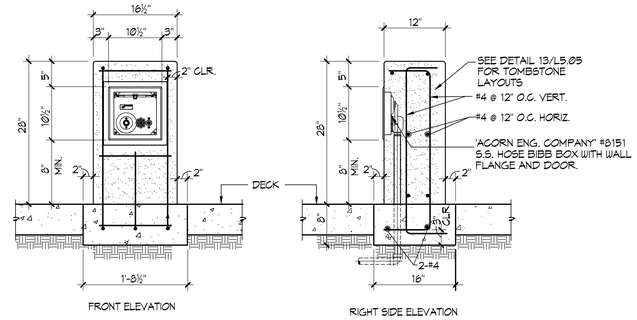

NOTE:
PROVIDE ½" RADIUS ON ALL CONCRETE CORNERS.

5 HOSE BIBB

1"=1'-0"

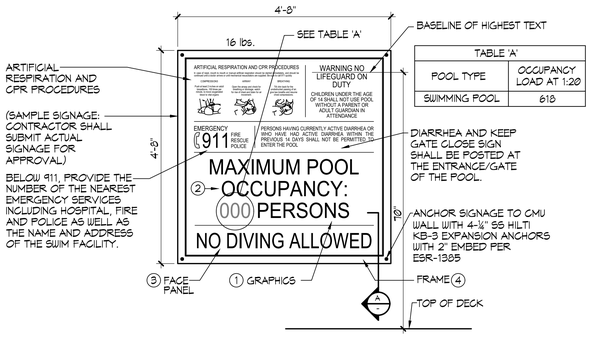

TABLE 'A'	
POOL TYPE	OCCUPANCY LOAD AT 1:20
SWIMMING POOL	618

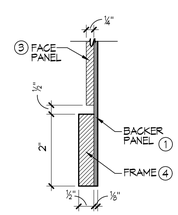

A SECTION

6" = 1'-0"

NOTES:

1. COORDINATE SIGNAGE PLACEMENT AND COLOR SCHEME WITH ARCHITECT/OWNER PRIOR TO INSTALLATION.
2. CONTRACTOR TO PROVIDE SHOP DRAWINGS OF PROPOSED SIGNAGE FOR REVIEW.
3. CHARACTER FONT STYLE SHALL BE CONVENTIONAL AND NOT UNUSUAL AND SHALL BE EASY TO READ.

SIGNAGE NOTES AND SPECIFICATIONS:

① ⅛" THICK PAINTED ALUMINUM BACKER PANEL.

② SILKSCREENED COPY/GRAPHICS WITH NON GLARE FINISH.

③ ¾" THICK PAINTED ALUMINUM FACE PANEL WITH SILKSCREENED COPY/GRAPHICS. ATTACH TO ⅛" THICK PAINTED ALUMINUM BACKER PANEL USING 'VHB' TAPE AND SILICONE ADHESIVE.

④ 2" WIDE x ½" THICK PAINTED ALUMINUM SIGN FRAME ADHERED TO ⅛" THICK PAINTED ALUMINUM BACKER USING 'LORDS' ADHESIVE AS REQUIRED. VERTICAL SECTIONS OF FRAME TO BE RECTANGULAR TUBE. FILL AND SAND SEAM ALONG EDGE AND FACE PRIOR TO PAINTING.

REQUIRED SIGNAGE:

1. ALL SIGNS SHALL HAVE CLEARLY LEGIBLE LETTERS OR NUMBERS NOT LESS THAN 4 INCHES HIGH, UNLESS OTHERWISE NOTED; AFFIXED TO A WALL, POLE, GATE, OR SIMILAR PERMANENT STRUCTURE IN A LOCATION VISIBLE TO ALL POOL USERS.
   - A. POOL USER CAPACITY SIGN; A SIGN SHALL INDICATE THE MAXIMUM NUMBER OF POOL USERS PERMITTED FOR EACH POOL. SEE TABLE 'A'.
   - B. NO DIVING SIGN; SIGNS SHALL BE POSTED IN CONSPICUOUS PLACES AND SHALL STATE 'NO DIVING' AT POOLS WITH A MAXIMUM WATER DEPTH OF 6 FEET OR LESS.
   - C. NO LIFEGUARD SIGN; WHERE NO LIFEGUARD SERVICE IS PROVIDED, A WARNING SIGN SHALL BE POSTED STATING, "NO LIFEGUARD ON DUTY." THE SIGN ALSO SHALL STATE IN LETTERS AT LEAST 1 INCH HIGH, "CHILDREN SHOULD NOT USE POOL WITHOUT ADULT SUPERVISION."
   - D. ARTIFICIAL RESPIRATION AND CPR SIGN; AN ILLUSTRATED DIAGRAM WITH TEXT AT LEAST ¼ INCH HIGH OF ARTIFICIAL RESPIRATION AND CPR PROCEDURES SHALL BE POSTED.
   - E. EMERGENCY SIGN; THE EMERGENCY TELEPHONE NUMBER 911. WITH NUMBERS NOT LESS THAN 4", THE NUMBER OF THE NEAREST EMERGENCY SERVICES AND THE NAME AND STREET ADDRESS OF THE POOL FACILITY WITH NUMBERS AND TEXT NOT LESS THAN 1" SHALL BE POSTED.
   - F. NO USE AFTER DARK; WHERE POOLS WERE CONSTRUCTED FOR WHICH LIGHTING WAS NOT REQUIRED A SIGN SHALL BE POSTED AT EACH POOL ENTRANCE ON THE OUTSIDE OF THE GATE(S) STATING, "NO USE OF POOL ALLOWED AFTER DARK."
   - G. KEEP CLOSED; A SIGN SHALL BE POSTED ON THE EXTERIOR SIDE OF GATES AND DOORS LEADING INTO THE POOL ENCLOSURE AREA STATING, "KEEP GATE CLOSED" OR "KEEP DOOR CLOSED".
   - H. DIARRHEA; A SIGN IN LETTERS AT LEAST 1 INCH HIGH AND IN A LANGUAGE OR DIAGRAM THAT IS CLEARLY STATED SHALL BE POSTED AT THE ENTRANCE AREA OF A PUBLIC POOL WHICH STATES THAT PERSONS HAVING CURRENTLY ACTIVE DIARRHEA OR WHO HAVE HAD ACTIVE DIARRHEA WITHIN THE PREVIOUS 14 DAYS SHALL NOT BE ALLOWED TO ENTER THE POOL WATER.
2. DIRECTION OF FLOW SIGNAGE AND LABELS.
   - A. THE DIRECTION OF FLOW FOR THE RECIRCULATION EQUIPMENT SHALL BE LABELED CLEARLY WITH DIRECTIONAL SYMBOLS SUCH AS ARROWS ON ALL PIPING IN THE EQUIPMENT AREA.
   - B. WHERE THE RECIRCULATION EQUIPMENT FOR MORE THAN ONE POOL IS LOCATED ON SITE, THE EQUIPMENT SHALL BE MARKED AS TO WHICH POOL THE SYSTEM SERVES.
   - C. VALVES AND PLUMBING LINES SHALL BE LABELED CLEARLY WITH THE SOURCE OR DESTINATION DESCRIPTIONS.

6 POOL SIGNAGE DETAIL

¾"=1'-0"

IDENTIFICATION STAMP
DIV. OF THE STATE ARCHITECT
APP: 02-119490 INC:
REVIEWED FOR
SS ☑ FLS ☑ ACS ☑
DATE: 09/13/2022

LPA
ARCHITECTURE ENGINEERING INTERIORS
LANDSCAPE ARCHITECTURE PLANNING

916-287-2400 Office
916-287-2401 Fax
LPADesignStudios.com
431 I Street,
Suite 107
Sacramento, California 95814

AQUATIC DESIGN GROUP
2224 Faraday Ave. Carlsbad, CA 92008
AquaticDesignGroup.com
760-438.8400

LICENSED ARCHITECT GREGORY S. JOHNSON C-35802 REN. 07/31/23 STATE OF CALIFORNIA

This document and all other project documents, ideas, aesthetics and designs incorporated therein are instruments of service. All project documents are copyright protected, are the property of LPA, Inc. (LPA) and cannot be lawfully used in whole or in part for any project or purpose except as set forth in the contractual agreement between LPA and its Client. The unauthorized disclosure and/or use of the project documents (including the creation of derivative works), may give rise to liability for copyright infringement, unlawful disclosure, use or misappropriation of property rights held by LPA. The unauthorized use of the project documents will give rise to the recovery of monetary losses and damages including attorney fees and costs for which the unauthorized user will be held liable.
Project documents describe the design intent of the work and are not a representation of as-built or existing conditions. LPA is not responsible for any discrepancies between the project documents and the existing conditions.

© LPA, Inc.

DAVIS SR HIGH SCHOOL
AQUATICS CENTER
315 W 14TH ST., DAVIS, CA 95616

Developed for
DAVIS JOINT UNIFIED SCHOOL DISTRICT

Revision	Date

Submittal	Date
50% DD REVIEW	06/15/2021
100% DD SUBMITTAL	07/26/2021
50% CD REVIEW	10/08/2021
100% CD DSA SUBMITTAL	10/22/2021

Job Number	1904413
Date Published	10/22/2021
Checked By	SJF
Scale	AS NOTED

DETAILS

AQ1.12

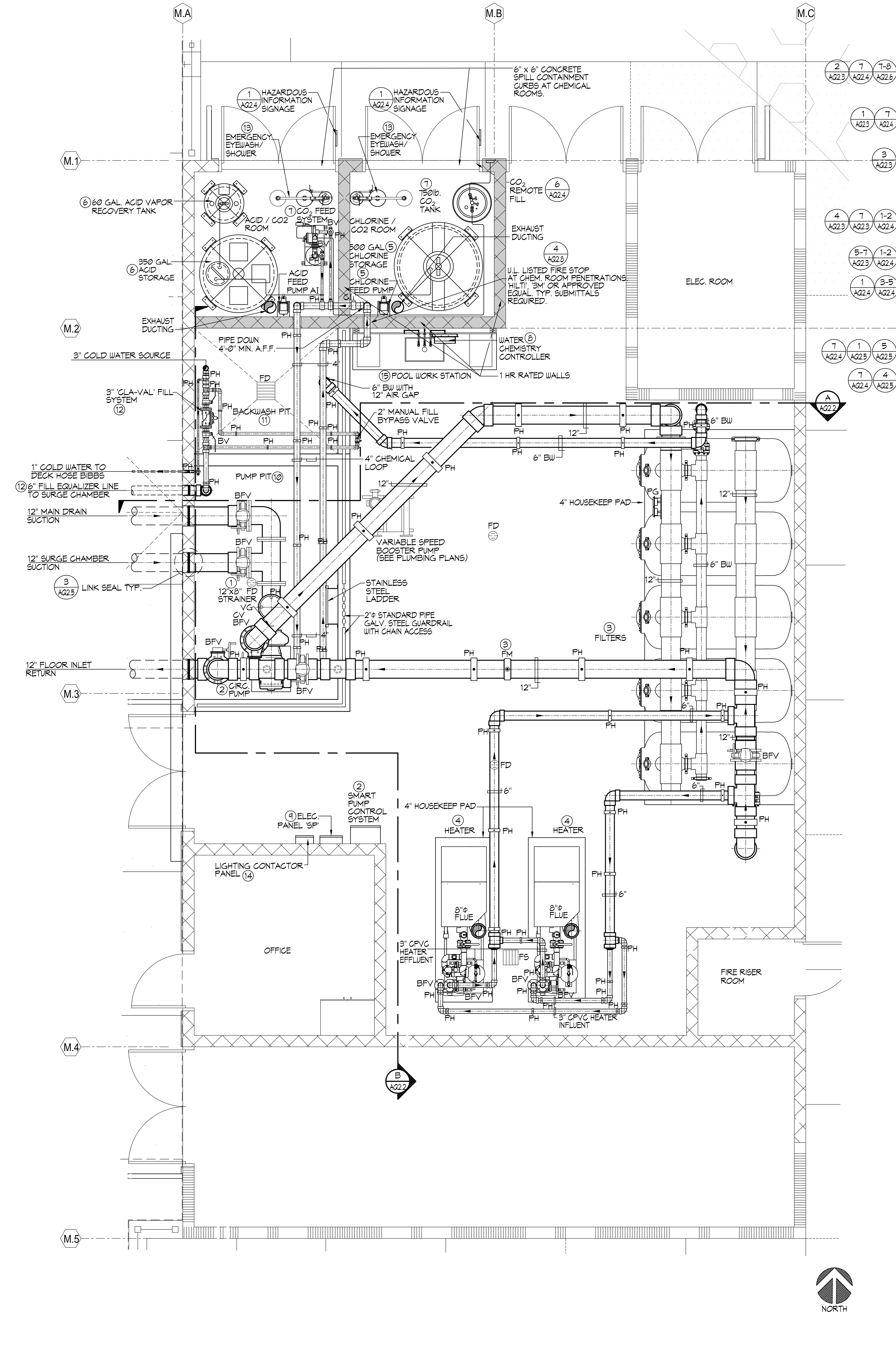

MECHANICAL ROOM LAYOUT PLAN

3/8"=1'-0"

EQUIPMENT LIST

1. SWIMMING POOL STRAINER: 'MER-MADE' F.O. SERIES FRP REDUCING BASKET STRAINER: ONE (1) 12"x8" STANDARD, WITH ACRYLIC LID AND TWO (2) STAINLESS STEEL STRAINERS EA. (150lbs.)
2. SWIMMING POOL CIRCULATION PUMP: 'PACO' #6015-7, 6"x8"x15" TYPE 'LC' END SUCTION CENTRIFUGAL PUMP; 1,150 RPM, 460V, 3PH; 40HP; RATED AT 1,930 GPM @ 60 FT. TDH; 85% EFFICIENT; PREMIMUM EFFICIENCY TEFC MOTOR; EPOXY COAT ALL WET SURFACES. 'PACO', 'AURORA' OR APPROVED EQUAL. (600 lbs.) PROVIDE 'SPCS' SMART PUMP CONTROL SYSTEM VARIABLE SPEED DRIVE MODEL SPCS040EF4 SYSTEM 21"x49"x17" DEEP. COORDINATE MOUNTING LOCATION TO MAINTAIN DESIRED CLEARANCES, 460V 3PH. (177 lbs.) SEE DETAIL 8/AQ2.6 FOR WALL MOUNTING.
3. SWIMMING POOL FILTERS: 'EKO3 GEN 2 #42260-1206-T-5 FULLY AUTOMATIC HI-RATE PERMANENT MEDIA FILTER WITH 130 SQ. FT. OF FILTER AREA RATED AT 1,950 GPM AT 15 GPM/SQ. FT. COMPLETE WITH 12" FACE PIPING, 6" BACKWASH, SEISMIC ANCHORAGE. PROVIDE UTILITIES, PIPING, VALVING, ETC. (8,660 lbs EA. TANK) 'EKO3 GEN 2', OR EQUAL. PROVIDE SIGNET P51530-P2, 12" FLOSENSOR WITH DIGITAL READ-OUT.
4. SWIMMING POOL HEATER(S): INDIRECT FIRED POOL HEATING PACKAGE SYSTEM; 'AQUAS' CREST WITH SMARTTOUCH CONTROL CONDENSING MODULATING BOILER, TITANIUM PLATE AND FRAME HEAT EXCHANGER WITH CPVC CONNECTIONS, FACTORY ASSEMBLED SKID MOUNTED PACKAGE, CALIFORNIA CODE CONTROLS, 1½" NATURAL GAS CONNECTION, 3" WATER CONNECTIONS, 8" DIAMETER VENT SIZE, PVC VENTED; 1,999,000 BTU PER HOUR INPUT, 97% EFFICIENT, PROVIDE ¾" COLD WATER TO EACH UNIT WITH ADJACENT FLOOR SINK FOR CONDENSATE. 'LOCHINVAR AP02000N', WEIGHT = 3,397 lbs. EA. TWO (2) TOTAL.
5. CHLORINE STORAGE/FEED SYSTEM: PROVIDE 'CHEM-TAINER' 500 GALLON #TC5971DC; DUAL STORAGE/CONTAINMENT TANK WITH LID SEISMICALLY RESTRAINED; OPERATING WEIGHT = (4,165lbs). COMPLIES WITH FED. REG #40CFR-264-193. FEED PUMP SHALL BE 'LMI' #SD43-88P-KSI; 288 GPD @ 15 PSI WITH FRP SHELF BRACKETS. HARD PIPE TO POINT OF INJECTION.
6. ACID STORAGE/FEED SYSTEM: PROVIDE 'CHEM-TAINER' 350 GALLON #TC5256DC; DUAL STORAGE/CONTAINMENT TANK WITH LID SEISMICALLY RESTRAINED; OPERATING WEIGHT =(2,915lbs). COMPLIES WITH FED. REG #40CFR-264-193. PROVIDE 60 GALLON ACID VAPOR RECOVERY SYSTEM. ONE (1) TOTAL.
7. CARBON DIOXIDE STORAGE FEED SYSTEM: PROVIDE ONE (1) 'NOVO-750', 750lb. CRYOGENIC LIQUID CO2 STORAGE TANK WITH ELECTRIC TANK HEATER, DUCTILE SEISMIC ANCHOR RING AND REMOTE FILL PORT. 594 LIQUID lbs., (5,195 CUBIC FEET OF GASEOUS CO2 AT NTP) ONE (1) TOTAL. PROVIDE EKO3PH-MTS CO2 HIGH EFFICIENCY FEED SYSTEM WITH ALKALINITY CONTROL, 0 TO 160 SCFH FEED CAPACITY BOOSTER PUMP, PIPING INJECTOR, FLOWMETER, RELAYS AND ACID FEED ALKALINITY CONTROL. ONE (1) SYSTEM TOTAL (92lbs. EA.) PROVIDE HARD WIRED 'ANALOX' #API KIT CO2 DETECTOR WITH AUDIBLE AND VISUAL ALARMS IN EACH CHEMICAL ROOM, UL 1971 STANDARD LISTED, ONE (1) TOTAL.
8. WATER CHEMISTRY CONTROLLER: PROVIDE ETHERNET CONNECTION TO 'BECSYS' CS-BECSYS7-BP-E WATER CHEMISTRY CONTROLLER. PROVIDE COMPLETE SYSTEM CONTROL PACKAGE. 'BECSYS SYSTEM 7', 'IMPACT', 'WALLACE & TIERNAN' OR APPROVED EQUAL.
9. ELECTRICAL: PROVIDE ALL ELECTRICAL WIRING, CONDUIT, PANEL(S), STARTER/DISCONNECT INTERCONNECT(S) ETC. AS REQUIRED FOR PROPER EQUIPMENT INSTALLATION PER MANUFACTURERS RECOMMENDATIONS AND SHOP DRAWINGS. COORDINATE ALL WORK WITH OTHER TRADES AS REQUIRED. REFER TO ELEC. PLANS FOR ALL ADDITIONAL INFO.
10. PUMP PIT: 8'-0" x 12'-0" x 5'-0" DEEP. PROVIDE 2"Φ GALV. STANDARD STEEL PIPE GUARDRAIL. PROVIDE FLOOR DRAIN TO WASTE. PROVIDE WATERPROOFING PER SPECIFICATIONS. ACCESS LADDER TO BE 'KARNEL' CUSTOM STAINLESS STEEL WITH GRAY EPOXY PAINT.
11. BACKWASH PIT: 8'-0" x 7'-0" x 5'-0" DEEP WITH 6"Φ P-TRAP OUTLET TO SEWER. PROVIDE WATERPROOFING PER SPECIFICATIONS. COORDINATE WITH STRUCTURAL AND PLUMBING PLANS.
12. FILL SYSTEM: 3" 'CLA-VAL' FILL SYSTEM TO INCLUDE 3" 'CLA-VAL' SOLENOID CONTROL VALVE #136-01BY, 3" DUCT IRON, EPOXY COATED BODY WITH CAST IRON DISC RETAINER AND DIAPHRAGM WASHER, BRONZE TRIM, FLANGED GLOBE PATTERN, 120V AT 60HZ. SOLENOID WIRING SHALL BE WIRED TO WATER CHEMISTRY CONTROLLER. PROVIDE 6" AIR GAP AT FILL POINT .
13. EYEWASH/SHOWER: HAWS MODEL #8300-8309CRP BARRIER FREE COMBINATION SHOWER AND EYE/FACE WASH WITH CORROSION RESISTANT PROTECTION. SEE MEP SHEETS FOR SUPPLY PIPING. TWO (2) TOTAL.
14. LIGHTING CONTACTOR PANEL: 'ALLEN BRADLEY' #500L; OR APPROVED EQUAL. PANEL SHALL BE MOUNTED IN A NEMA 12 HINGED COVER - LOCKABLE ENCLOSURE. CONTACTORS TO BE SWITCHED BY MOMENTARY SWITCH EQUAL TO 'HUBBELL' #1557 MOUNTED IN J-BOX IN MECHANICAL EQUIPMENT ROOM. REFER TO ELECTRICAL PLANS FOR LOCATION OF OWNER COORDINATED REMOTE UNDERWATER LIGHT SWITCH.
15. POOL OPERATOR WORKSTATION DESK: 'TOTAL LAB SOLUTIONS' EPOXY COUNTERTOP WITH DROP-IN SINK AND TWO (2) END CABINETS. FURNISH WITH WALL MOUNTED TWO (2) FAUCETS 'BROEN BOSS' OR APPROVED EQUAL. SEE MEP PLANS FOR WATER SUPPLY PIPING.

LEGEND

BV = BALL VALVE

BFV = BUTTERFLY VALVE

CV = CHECK VALVE

FM = FLOWMETER

BW = BACKWASH

FS = FLOOR SINK

AI = ACID INJECTION

CI = CHLORINE INJECTION

PH = PIPE HANGER (3/AQ2.8)

PG/VG= VACUUM / PRESSURE GAUGE (6/AQ2.5, 6/AQ2.6)

FD = FLOOR DRAIN

NOTE:

ALL ELECTRICAL CONDUITS WITHIN MECHANICAL ROOM AND CHEMICAL ROOMS SHALL BE RIDGID NEMA 3R SUITABLE FOR CORROSIVE ATMOSPHERE.

THREE PHASE MOTOR LOADS AT 460V

SWIMMING POOL CIRCULATION PUMP: 40 HP @ 460V = 52 AMPS

GENERAL NOTES

1. THE PIPING SYSTEM SHALL HAVE DIRECTION OF FLOW ARROWS INDICATED ON THE PIPES.
2. PUBLIC POOLS SHALL HAVE A FLOW DIAGRAM OF THE POOL'S PIPING SYSTEM WITH OPERATION INSTRUCTIONS.
3. THE FLOW DIAGRAM AND INSTRUCTIONS SHALL BE AVAILABLE ON THE PREMISES AT ALL TIME
4. ALL MECHANICAL ROOM FLOORS SHALL BE SLOPED A MIN ¼" PER FOOT TO A DRAIN PER CBC 3122B. SEE ARCHITECTURAL SHEETS FOR SPOT ELEVATIONS AND SLOPES.

HEATER/GAS PIPING INSTALLATION NOTE

GAS FIRED POOL HEATER(S) INSTALLED ON A GAS SUPPLY SYSTEM UTILIZING A 2 PSI OR 5 PSI SUPPLY. GAS PRESSURE SHALL REQUIRE A REGULATOR TO REDUCE THE SUPPLY PRESSURE. A PROPERLY SIZED AND INSTALLED LOCK-UP-TYPE HIGH GAS PRESSURE REGULATOR (HGPR) SHALL BE USED TO REDUCE THE GAS PRESSURE AT THE UNIT INLET TO A MINIMUM OF 4" TO A MAXIMUM OF 14" WATER COLUMN.

'LOCHINVAR' RECOMMENDS THAT ANY REQUIRED LINE LOCK-UP-TYPE HIGH GAS PRESSURE REGULATOR BE INSTALLED WITH A MINIMUM OF 8 FEET TO 10 FEET OF PIPE FROM ITS DISCHARGE TO THE UNIT'S GAS INLET. IF A STRAIGHT DISTANCE OF GAS PIPE IS NOT AVAILABLE THE ADDITION OF A VERTICAL 'U' IN THE GAS PIPING DOWN STREAM FROM THE 'HGPR' CAN BE USED TO ACHIEVE THE 8 FEET TO 10 FEET OF DISTANCE.

CONTRACTOR IS RESPONSIBLE FOR HEATER VENTING, EXHAUST DUCTING, FLUE TERMINUS AND PENETRATION(S) THROUGH BUILDING STRUCTURE.

MEP COMPONENT ANCHORAGE NOTE

ALL MECHANICAL, PLUMBING, AND ELECTRICAL COMPONENTS SHALL BE ANCHORED AND INSTALLED PER THE DETAILS ON THE DSA - APPROVED CONSTRUCTION DOCUMENTS. THE FOLLOWING COMPONENTS SHALL BE ANCHORED OR BRACED TO MEET THE FORCE AND DISPLACEMENT REQUIREMENTS PRESCRIBED IN THE 2019 CBC SECTIONS 1617A.1.18 THROUGH 1617A.1.26 AND ASCE 7-16 CHAPTERS 13, 26 AND 30.

1. ALL PERMANENT EQUIPMENT AND COMPONENTS.
2. TEMPORARY, MOVABLE OR MOBILE EQUIPMENT THAT IS PERMANENTLY ATTACHED (E.G. HARD WIRED) TO THE BUILDING UTILITY SERVICES SUCH AS ELECTRICITY, GAS OR WATER. "PERMANENTLY ATTACHED" SHALL INCLUDE ALL ELECTRICAL CONNECTIONS EXCEPT PLUGS FOR 110/220 VOLT RECEPTACLES HAVING A FLEXIBLE CABLE.
3. TEMPORARY, MOVABLE OR MOBILE EQUIPMENT WHICH IS HEAVIER THAN 400 POUNDS OR HAS A CENTER OF MASS LOCATED 4 FEET OR MORE ABOVE THE ADJACENT FLOOR OR ROOF LEVEL THAT DIRECTLY SUPPORT THE COMPONENT IS REQUIRED TO BE RESTRAINED IN A MANNER APPROVED BY DSA.

THE FOLLOWING MECHANICAL AND ELECTRICAL COMPONENTS SHALL BE POSITIVELY ATTACHED TO THE STRUCTURE, BUT NEED NOT DEMONSTRATE DESIGN COMPLIANCE WITH THE REFERENCES NOTED ABOVE. THESE COMPONENTS SHALL HAVE FLEXIBLE CONNECTIONS PROVIDED BETWEEN THE COMPONENT AND ASSOCIATED DUCTWORK, PIPING, AND CONDUIT. FLEXIBLE CONNECTIONS MUST ALLOW MOVEMENT IN BOTH TRANSVERSE AND LONGITUDINAL DIRECTIONS:

A. COMPONENTS WEIGHING LESS THAN 400 POUNDS AND HAVING A CENTER OF MASS LOCATED 4 FEET OR LESS ABOVE THE ADJACENT FLOOR OR ROOF LEVEL THAT DIRECTLY SUPPORT THE COMPONENT.
B. COMPONENTS WEIGHING LESS THAN 20 POUNDS, OR IN THE CASE OF DISTRIBUTED SYSTEMS, LESS THAN 5 POUNDS PER FOOT, WHICH ARE SUSPENDED FROM A ROOF OR FLOOR OR HUNG FROM A WALL.

THE ANCHORAGE OF ALL MECHANICAL, ELECTRICAL AND PLUMBING COMPONENTS SHALL BE SUBJECT TO THE APPROVAL OF DESIGN PROFESSIONAL IN GENERAL RESPONSIBLE CHARGE OR STRUCTURAL ENGINEER DELEGATED RESPONSIBILITY AND ACCEPTANCE BY DSA. THE PROJECT INSPECTOR WILL VERIFY THAT ALL COMPONENTS AND EQUIPMENT HAVE BEEN ANCHORED IN ACCORDANCE WITH ABOVE REQUIREMENTS.

PIPING, DUCTWORK, AND ELECTRICAL DISTRIBUTION SYSTEM BRACING NOTE

PIPING, DUCTWORK, AND ELECTRICAL DISTRIBUTION SYSTEMS SHALL BE BRACED TO COMPLY WITH THE FORCES AND DISPLACEMENTS PRESCRIBED IN ASCE 7-16 SECTION 13.3 AS DEFINED IN ASCE 7-16 SECTION 13.6.5, 13.6.6, 13.6.7, 13.6.8; AND 2019 CBC, SECTIONS 1617A.1.24, 1617A.1.25, 1617A.1.26.

THE METHOD OF SHOWING BRACING AND ATTACHMENTS TO THE STRUCTURE FOR THE IDENTIFIED DISTRIBUTION SYSTEM ARE AS NOTED BELOW. WHEN BRACING AND ATTACHMENTS ARE BASED ON A PREAPPROVED INSTALLATION GUIDE (E.G., OSHPD OPM FOR 2019 CBC OR LATER), COPIES OF THE BRACING SYSTEM INSTALLATION GUIDE OR MANUAL SHALL BE AVAILABLE ON THE JOBSITE PRIOR TO THE START OF AND DURING THE HANGING AND BRACING OF THE DISTRIBUTION SYSTEMS. THE STRUCTURAL ENGINEER OF RECORD SHALL VERIFY THE ADEQUACY OF THE STRUCTURE TO SUPPORT THE HANGER AND BRACE LOADS.

MECHANICAL PIPING (MP). MECHANICAL DUCTS (MD), PLUMBING PIPING (PP), ELECTRICAL DISTRIBUTION SYSTEMS (E):

MP ☒ MD ☐ PP ☒ E ☐ 1. SHALL COMPLY WITH THE APPLICABLE OSHPD PRE-APPROVAL (OPM #) OPM #0043-13

MECHANICAL ANCHORAGE

1. EXPANSION OR WEDGE ANCHORS INTO CONCRETE: HILTI KB TZ 2 (ICC ESR-4266) TO BE INSTALLED IN ACCORDANCE WITH ICC REPORT AND MANUFACTURER'S RECOMMENDATIONS.
2. EXPANSION OR WEDGE ANCHORS INTO MASONRY: HILTI KB TZ 2 (ICC ESR-4561) TO BE INSTALLED IN ACCORDANCE WITH ICC REPORT AND MANUFACTURER'S RECOMMENDATIONS.
3. FASTENERS SHALL BE STAINLESS STEEL FOR EXTERIOR USE OR WHEN EXPOSED TO WEATHER. PROVIDE GALVANIZED CARBON STEEL ANCHORS AT OTHER LOCATIONS, UNLESS OTHERWISE NOTED.
4. IF REINFORCEMENT IS ENCOUNTERED DURING DRILLING, ABANDON AND SHIFT THE HOLE LOCATION TO AVOID THE REINFORCEMENT. PROVIDE A MINIMUM OF 2 ANCHOR DIAMETERS OR 1 INCH, WHICHEVER IS LARGER, OF SOUND CONCRETE BETWEEN THE DOWEL AND THE ABANDONED HOLE. FILL THE ABANDONED HOLE WITH NON-SHRINK GROUT WITH CONCRETE STRENGTH EQUAL TO OR GREATER THAN BASE MATERIAL. IF THE ANCHOR OR DOWEL MAY NOT BE SHIFTED AS NOTED ABOVE, THE STRUCTURAL ENGINEER WILL DETERMINE A NEW LOCATION.
5. LOCATE REINFORCEMENT AND CONFIRM FINAL ANCHOR LOCATIONS PRIOR TO FABRICATING PLATES, MEMBERS, OR OTHER STEEL ASSEMBLIES ATTACHED WITH MECHANICAL ANCHORS.
6. ANCHORS SHALL BE PROOF-TESTED BY OWNER'S TESTING AND INSPECTION AGENCY.
7. TEST ANCHORS NO SOONER THAN 24 HOURS AFTER INSTALLATION.
8. APPLY TEST LOAD BY ANY METHOD THAT WILL EFFECTIVELY MEASURE THE TENSION OF THE ANCHOR SUCH AS DIRECT PULL WITH A HYDRAULIC JACK, TORQUE WRENCH, OR CALIBRATED SPRING LOADING DEVICES, ETC.
9. REACTION LOADS FROM TEST FIXTURES MAY BE APPLIED CLOSE TO THE ANCHOR BEING TESTED, PROVIDED THE ANCHOR IS NOT RESTRAINED FROM WITHDRAWING BY A BASE PLATE OR OTHER FIXTURE. IF RESTRAINT IS FOUND, LOOSEN AND SHIM OR REMOVE THE FIXTURE PRIOR TO TESTING.
10. UNLESS OTHERWISE NOTED, PROVIDE MINIMUM EMBEDMENT OF ANCHORS AS SHOWN IN TABLES BELOW.
11. TEST 50% OF ANCHORS PER ONE OF THE FOLLOWING METHODS AND IN ACCORDANCE WITH THE VALUES SHOWN IN THE TABLE:
    A. HYDRAULIC RAM METHOD: APPLY PROOF TEST LOAD WITHOUT REMOVING THE NUT. IF IT IS NOT POSSIBLE TO TEST WITH THE NUT INSTALLED, REPLACE THE NUT WITH A THREADED COUPLER TO THE LOAD. ANCHOR IS ACCEPTABLE IF NO MOVEMENT IS OBSERVED AT THE TEST LOAD. MOVEMENT MAY BE DETERMINED WHEN THE WASHER UNDER THE NUT BECOMES LOOSE.
    B. TORQUE WRENCH METHOD: TEST ANCHORS TO THE TORQUE LOAD INDICATED IN THE TABLE WITH ONE-HALF TURN OF THE NUT.
12. IF ANY ANCHOR FAILS TESTING, REPLACE ANCHOR AND TEST ADDITIONAL ANCHORS OF THE SAME CATEGORY NOT PREVIOUSLY TESTED UNTIL TWENTY (20) CONSECUTIVE TESTS PASS, THEN RESUME INITIAL TESTING FREQUENCY. CCD WILL BE REQUIRED.

WEDGE, EXPANSION OR ADHESIVE ANCHOR EMBEDMENT DEPTH AND TEST LOAD

SIZE	HILTI KB TZ 2 (SS) ANCHORS IN CONCRETE		KB TZ 2 (SS) ANCHORS IN CMU		HILTI HIT-HY 200 ADHESIVE ANCHORS IN CONCRETE	
	MIN. EMBED	TORQUE LOAD (FT-LBS)	MIN. EMBED	TORQUE LOAD (FT-LBS)	MIN. EMBED	PULL TEST LOAD (LBS)
¼" DIA.	1½"	10	1¾"	6	-	-
⅜" DIA.	2½"	25	3"	15	3"	-
½" DIA.	3¼"	40	3¾"	25	4"	-
⅝" DIA.	3¼"	60	4½"	35	5"	3,500
¾" DIA.	3¾"	110	5½"	50	7.25"	3,500

ALL VALUES PER 2019 CBC 1910A.5.4

IDENTIFICATION STAMP
DIV. OF THE STATE ARCHITECT
APP: 02-119490 INC:
REVIEWED FOR
SS ☑ FLS ☑ ACS ☑
DATE: 09/13/2022

LPA

ARCHITECTURE ENGINEERING INTERIORS
LANDSCAPE ARCHITECTURE PLANNING

916-287-2400 Office
916-287-2401 Fax
LPADesignStudios.com

431 I Street,
Suite 107
Sacramento, California 95814

AQUATIC DESIGN GROUP
2226 Faraday Ave. Carlsbad, CA 92008
AquaticDesignGroup.com
760.438.8400

LICENSED ARCHITECT GREGORY S. FERRELL C35802 REN. 07/31/23 STATE OF CALIFORNIA

This document and all other project documents, ideas, aesthetics and designs incorporated therein are instruments of service. All project documents are copyright protected, are the property of LPA, Inc. (LPA) and cannot be lawfully used in whole or in part for any project or purpose except as set forth in the contractual agreement between LPA and its Client. The unauthorized disclosure and/or use of the project documents (including the creation of derivative works), may give rise to liability for copyright infringement, unlawful disclosure, use or misappropriation of property rights held by LPA. The unauthorized use of the project documents will give rise to the recovery of monetary losses and damages including attorney fees and costs for which the unauthorized user will be held liable.
Project documents describe the design intent of the work and are not a representation of as-built or existing conditions. LPA is not responsible for any discrepancies between the project documents and the existing conditions.

© LPA, Inc.

DAVIS SR HIGH SCHOOL
AQUATICS CENTER
315 W 14TH ST., DAVIS, CA 95616

Developed for
DAVIS JOINT UNIFIED SCHOOL DISTRICT

Revision	Date

Submittal	Date
50% DD REVIEW	06/15/2021
100% DD SUBMITTAL	07/26/2021
50% CD REVIEW	10/08/2021
100% CD DSA SUBMITTAL	10/22/2021

Job Number	1904413
Date Published	10/22/2021
Checked By	SJF
Scale	3/8"=1'-0"

MECHANICAL ROOM LAYOUT PLAN

AQ2.1

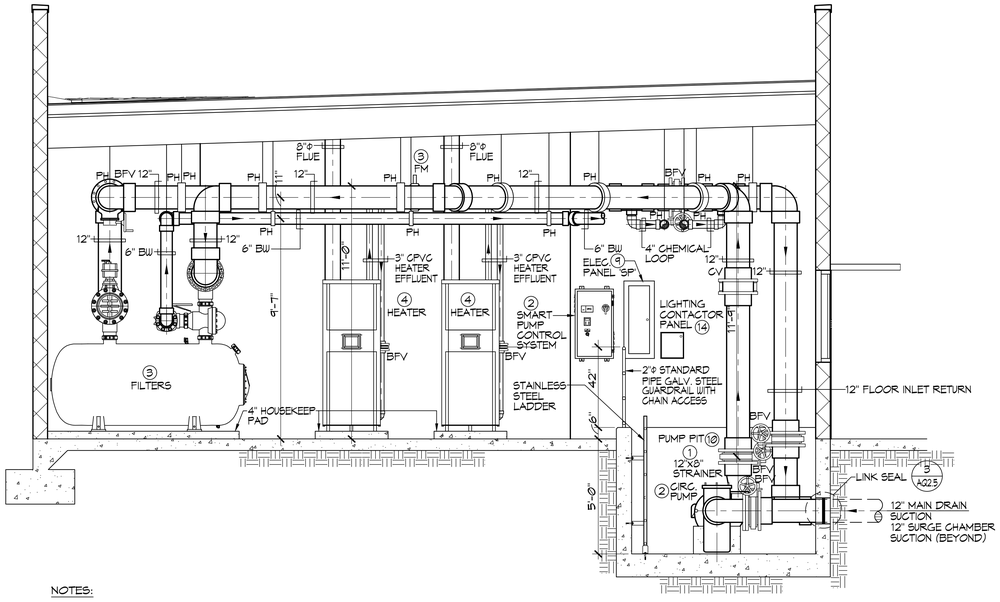

NOTES:

1. REFER TO MECHANICAL PLANS FOR HEATER VENTING, EXHAUST DUCTING, FLUE TERMINUS AND PENETRATION(S) THROUGH BUILDING STRUCTURE.
2. SEE ARCHITECTURAL AND STRUCTURAL DRAWINGS FOR BUILDING LAYOUT AND CONSTRUCTION REQUIREMENTS.
3. SEE SHEET AQ2.1 FOR EQUIPMENT LIST.

A MECHANICAL ROOM SECTION 3/8"=1'-0"

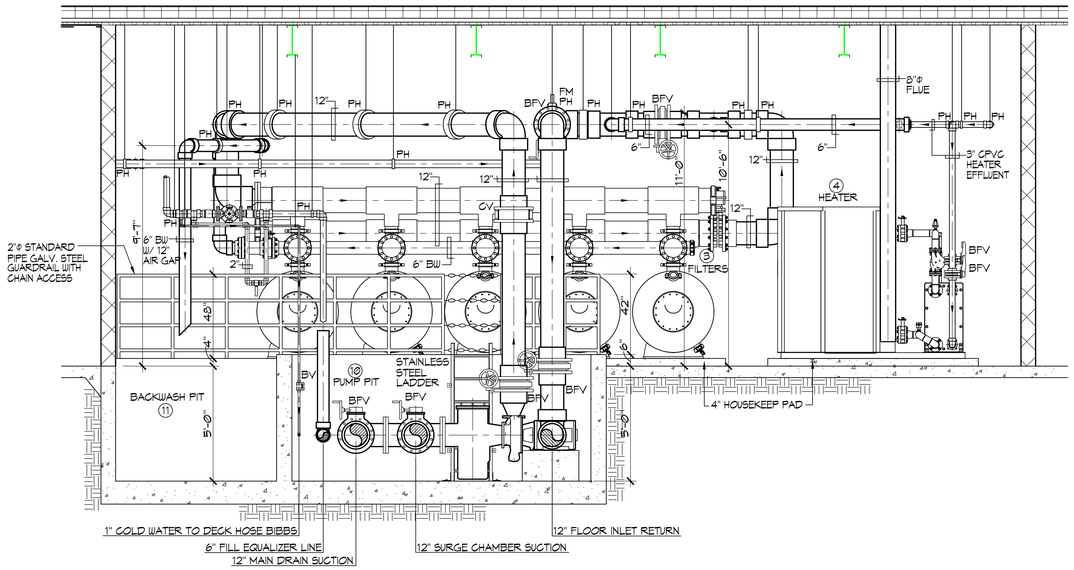

NOTES:

1. REFER TO MECHANICAL PLANS FOR HEATER VENTING, EXHAUST DUCTING, FLUE TERMINUS AND PENETRATION(S) THROUGH BUILDING STRUCTURE.
2. SEE ARCHITECTURAL AND STRUCTURAL DRAWINGS FOR BUILDING LAYOUT AND CONSTRUCTION REQUIREMENTS.
3. SEE SHEET AQ2.1 FOR EQUIPMENT LIST.

1 MECHANICAL ROOM SECTION 3/8"=1'-0"

IDENTIFICATION STAMP
DIV. OF THE STATE ARCHITECT
APP: 02-119490 INC:
REVIEWED FOR
SS ☑ FLS ☑ ACS ☑
DATE: 09/13/2022

LPA
ARCHITECTURE ENGINEERING INTERIORS
LANDSCAPE ARCHITECTURE PLANNING

916-287-2400 Office
916-287-2401 Fax
LPADesignStudios.com
431 I Street,
Suite 107
Sacramento, California 95814

AQUATIC DESIGN GROUP
2228 Faraday Ave. Carlsbad, CA 92008
AquaticDesignGroup.com
760.438.8400

LICENSED ARCHITECT
GREGORY S. SCOTT
C35862
REN. 07/31/23
STATE OF CALIFORNIA

This document and all other project documents, ideas, aesthetics and designs incorporated therein are instruments of service. All project documents are copyright protected, are the property of LPA, Inc. (LPA) and cannot be lawfully used in whole or in part for any project or purpose except as set forth in the contractual agreement between LPA and its Client. The unauthorized disclosure and/or use of the project documents (including the creation of derivative works), may give rise to liability for copyright infringement, unlawful disclosure, use or misappropriation of property rights held by LPA. The unauthorized use of the project documents will give rise to the recovery of monetary losses and damages including attorney fees and costs for which the unauthorized user will be held liable.
Project documents describe the design intent of the work and are not a representation of as-built or existing conditions. LPA is not responsible for any discrepancies between the project documents and the existing conditions.

© LPA, Inc.

DAVIS SR HIGH SCHOOL
AQUATICS CENTER
315 W 14TH ST., DAVIS, CA 95616

Developed for
DAVIS JOINT UNIFIED SCHOOL DISTRICT

Revision	Date

Submittal	Date
50% DD REVIEW	06/15/2021
100% DD SUBMITTAL	07/26/2021
50% CD REVIEW	10/08/2021
100% CD DSA SUBMITTAL	10/22/2021

Job Number	1904413
Date Published	10/22/2021
Checked By	SJF
Scale	3/8"=1'-0"

MECHANICAL ROOM SECTIONS

AQ2.2

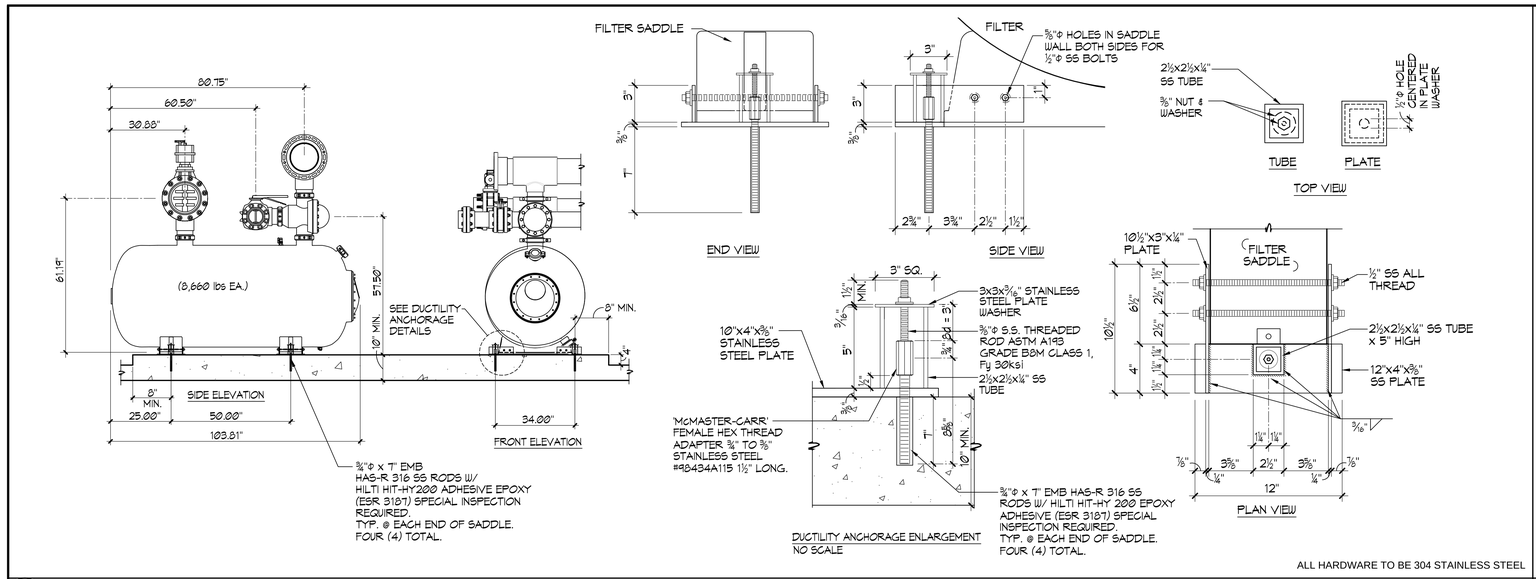

ALL HARDWARE TO BE 304 STAINLESS STEEL

1 FILTER ANCHORAGE

NO SCALE

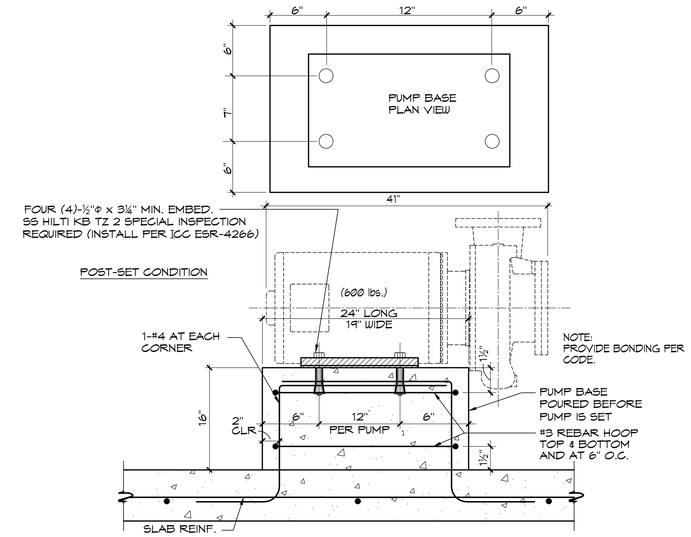

2 PUMP ANCHORAGE

NO SCALE

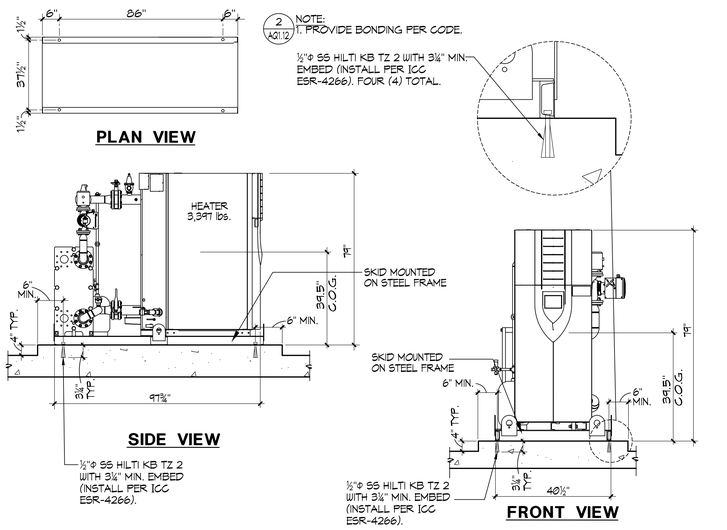

3 HEATER ANCHORAGE

NO SCALE

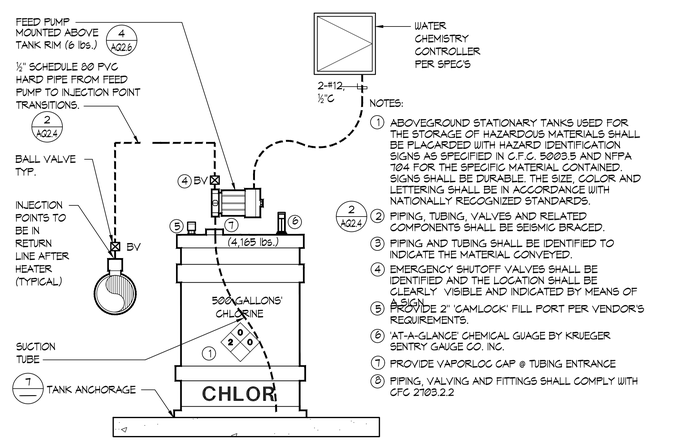

4 SODIUM HYPOCHLORITE FEED SCHEMATIC

NO SCALE

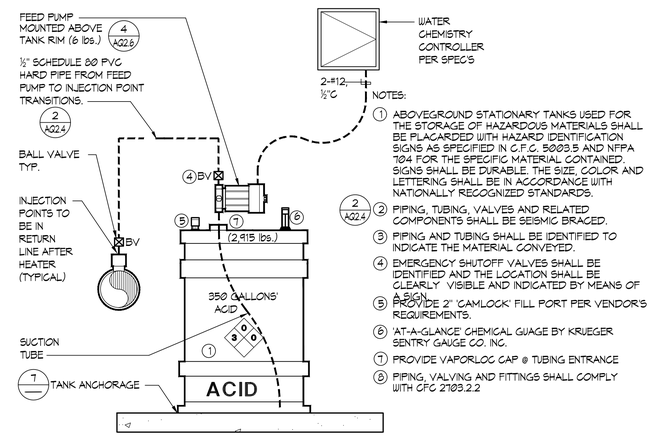

5 MURIATIC ACID FEED SCHEMATIC

NO SCALE

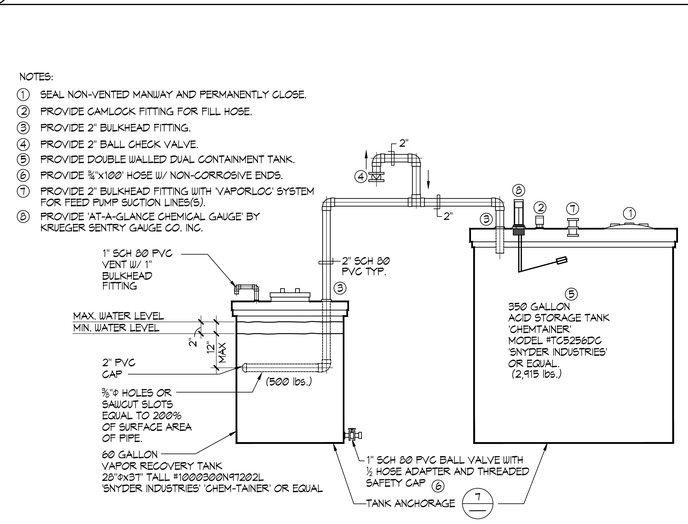

6 VAPOR RECOVERY TANK

1/16"=1'-0"

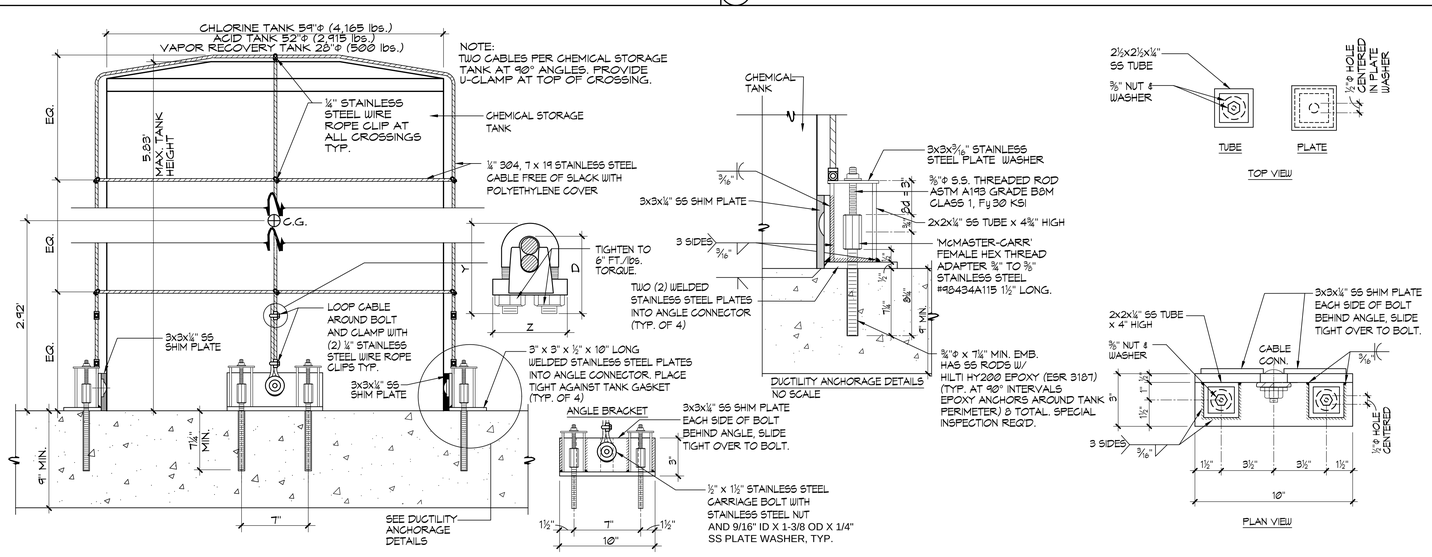

ALL HARDWARE TO BE 304 STAINLESS STEEL

7 CHEMICAL TANK ANCHOR (TYP. 3 TANKS)

NO SCALE

IDENTIFICATION STAMP
DIV. OF THE STATE ARCHITECT
APP: 02-119490 INC:
REVIEWED FOR
SS ☑ FLS ☑ ACS ☑
DATE: 09/13/2022

LPA
ARCHITECTURE ENGINEERING INTERIORS
LANDSCAPE ARCHITECTURE PLANNING

916-287-2400 Office
916-287-2401 Fax
LPADesignStudios.com
431 I Street,
Suite 107
Sacramento, California 95814

AQUATIC DESIGN GROUP
2236 Faraday Ave. Carlsbad, CA 92008
AquaticDesignGroup.com
760.438.8400

LICENSED ARCHITECT
JEFFREY S. FRIELL
C35802
REN. 07/31/23
STATE OF CALIFORNIA

This document and all other project documents, ideas, aesthetics and designs incorporated therein are instruments of service. All project documents are copyright protected, are the property of LPA, Inc. (LPA) and cannot be lawfully used in whole or in part for any project or purpose except as set forth in the contractual agreement between LPA and its Client. The unauthorized disclosure and/or use of the project documents (including the creation of derivative works), may give rise to liability for copyright infringement, unlawful disclosure, use or misappropriation of property rights held by LPA. The unauthorized use of the project documents will give rise to the recovery of monetary losses and damages including attorney fees and costs for which the unauthorized user will be held liable.
Project documents describe the design intent of the work and are not a representation of as-built or existing conditions. LPA is not responsible for any discrepancies between the project documents and the existing conditions.
© LPA, Inc.

DAVIS SR HIGH SCHOOL
AQUATICS CENTER
315 W 14TH ST., DAVIS, CA 95616

Developed for
DAVIS JOINT UNIFIED SCHOOL DISTRICT

Revision	Date

Submittal	Date
50% DD REVIEW	06/15/2021
100% DD SUBMITTAL	07/26/2021
50% CD REVIEW	10/08/2021
100% CD DSA SUBMITTAL	10/22/2021

Job Number	1904413
Date Published	10/22/2021
Checked By	SJF
Scale	AS NOTED

DETAILS

AQ2.3

CHEMICAL CLASSIFICATION TABLE

COMMON NAME	CHEMICAL NAME	% COMP.	CAS #	FORM	QUANT. STORED (NOT USED)	QUANT. IN USE (USE-CLOSED)	MAXIMUM ALLOWABLE QUANTITY	LOCATION (STORAGE & USE)	HAZ. CLASSES	JUSTIFICATION
SODIUM HYPOCHLORITE	SODIUM HYPOCHLORITE	12.5%	7681-52-9	LIQUID	0 GAL.	500 GAL.	500 GAL.	CHEM. ROOM	CORROSIVE LIQUID	MSDS
MURIATIC ACID	HYDROCHLORIC ACID	25%	7647-01-0	LIQUID	0 GAL.	350 GAL.	500 GAL.	CHEM. ROOM	CORROSIVE LIQUID	MSDS
CARBON DIOXIDE	CARBON DIOXIDE	100%	124-39-9	LIQUID	0 lbs.	600 lbs.	686 lbs.	CHEM. ROOM	CRYOGENIC	MSDS

QUANTITIES OF CHEMICALS DO NOT EXCEED THE QUANTITIES LISTED IN CBC TABLES 307.1 (1) AND 307.1 (2).
FOR CARBON DIOXIDE GAS SEE TABLE 1.12.8(b) OF THE NFPA-1, 6,000 FT^3 ALLOWABLE OR 686 lbs. STORAGE PER CONTAINED AREA PROVIDE HARD WIRED CO_2 DETECTOR 'ANALOX SENSOR TECHNOLOGY' MODEL #AP1 KIT SENSOR AND STROBE UNITS 120V HARD WIRED W/ STROBE LIGHT AND AUDIBLE ALARM. SENSOR MOUNTED 18 INCHES A.F.F. AND ALARM LEVEL BETWEEN 70-76 INCHES AND WITHIN VISIBLE EYESIGHT OF DOOR. TO BE SET TO DETECT CO2 GAS IN LEVELS IN EXCESS OF THE PEL. PROVIDE IN EACH ROOM CONTAINING CO_2.

RATING EXPLANATION GUIDE

RATING	HEALTH HAZARD	FLAMMABILITY HAZARD	REACTIVITY HAZARD	SPECIFIC HAZARD	
4	CAN BE LETHAL	EXTREMELY FLAMMABLE. IGNITES AT BELOW 73° F.	MAY EXPLODE AT NORMAL TEMPERATURES AND PRESSURES	OXIDIZER:	OX
				ACID:	ACID
3	CAN CAUSE SERIOUS OR PERMANENT INJURY	IGNITES AT ABOVE 73° F, BELOW 100° F.	MAY EXPLODE AT HIGH TEMPERATURES OR SHOCK	CORROSIVE:	COR
2	CAN CAUSE TEMPORARY INCAPACITATION OR RESIDUAL INJURY	IGNITES AT ABOVE 100° F, BELOW 200° F.	VIOLENT CHEMICAL CHANGE AT HIGH TEMPERATURES OR PRESSURES	ALKALI:	ALK
				USE NO WATER:	~~W~~
1	CAN CAUSE SIGNIFICANT IRRITATION	IGNITES AT ABOVE 200° F.	NORMALLY STABLE. HIGH TEMPERATURES MAKE UNSTABLE	RADIATION HAZARDS:	☢
0	NO HAZARD	WILL NOT BURN	STABLE	POLYMERIZES:	P

NOTES:
1. CONFIRM SIGNAGE WITH LOCAL FIRE MARSHALL AND/OR BUILDING CODES PRIOR TO INSTALLATION. SIGNS SHALL CONFORM TO NFPA 704.
2. SIGNS SHALL BE SIZES AND COLORS PER CODE MOUNTED AT +60" A.F.F. ON DOORS AT CHEMICAL ROOMS.

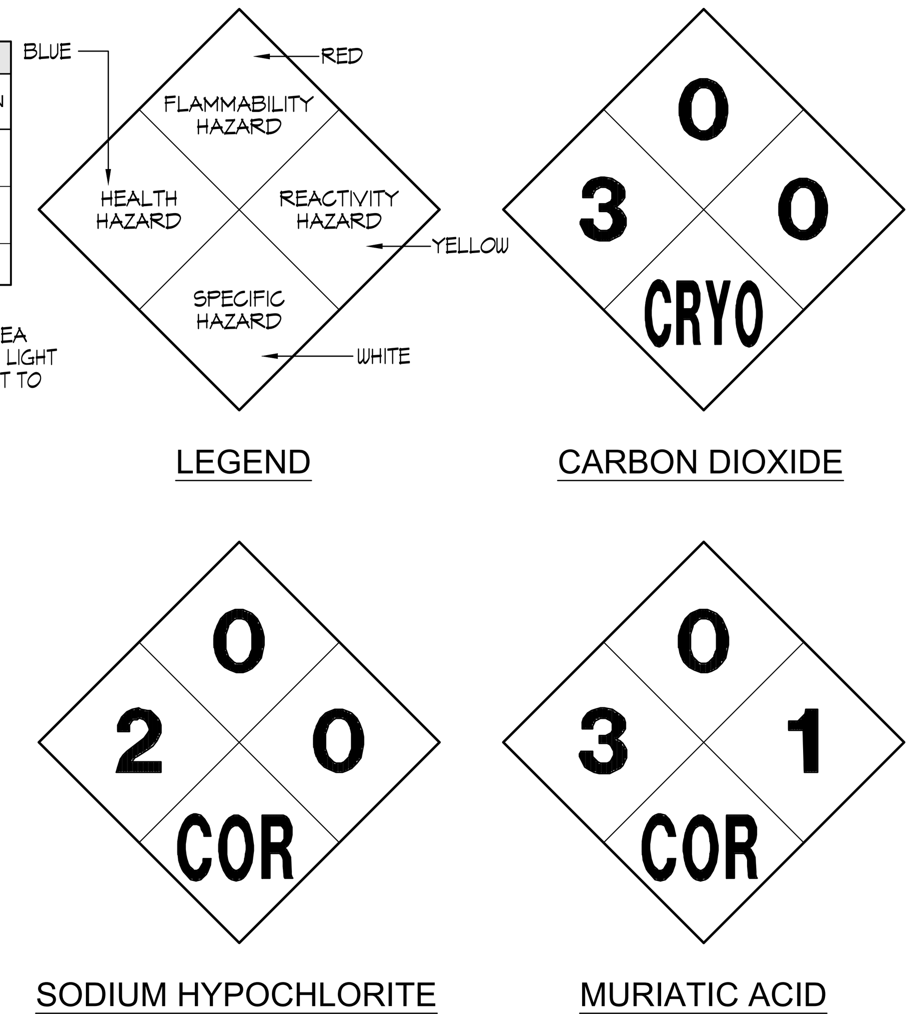

SIGN SHALL BE POSTED AT ROOM ENTRANCE; SIGN SHALL BE NOT LESS THAN 8" IN LENGTH AND 6" IN HEIGHT AND INDICATE:

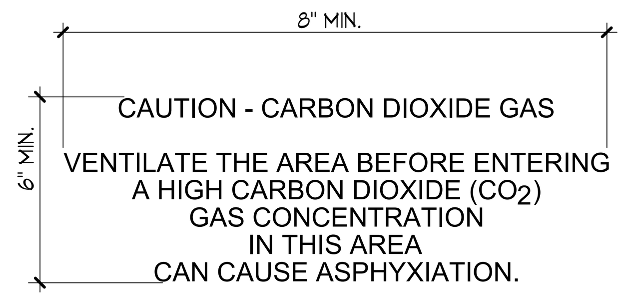

1 HAZARDOUS INFORMATION SIGNAGE NO SCALE

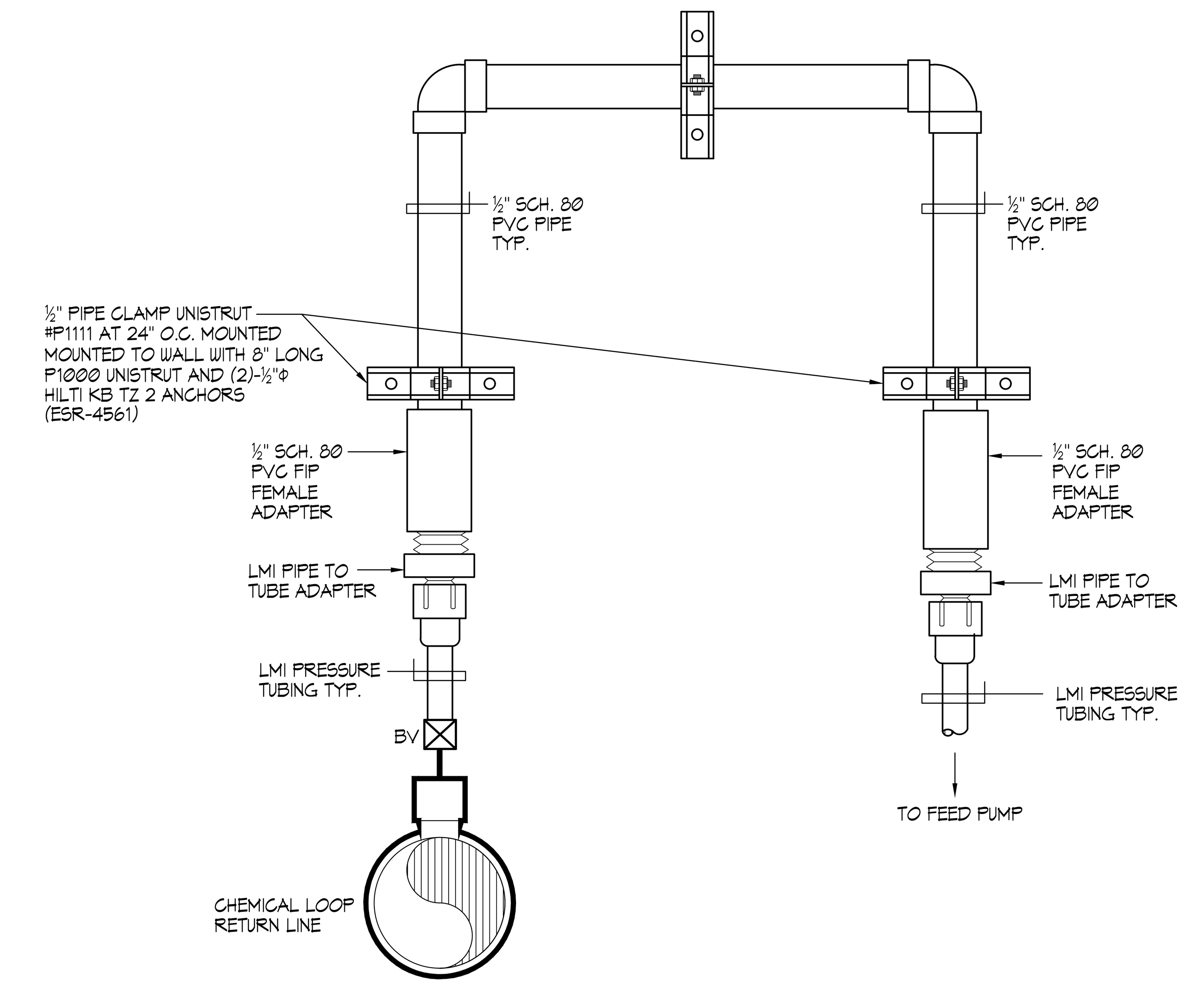

2 CHEMICAL FEED PIPING DETAIL NO SCALE

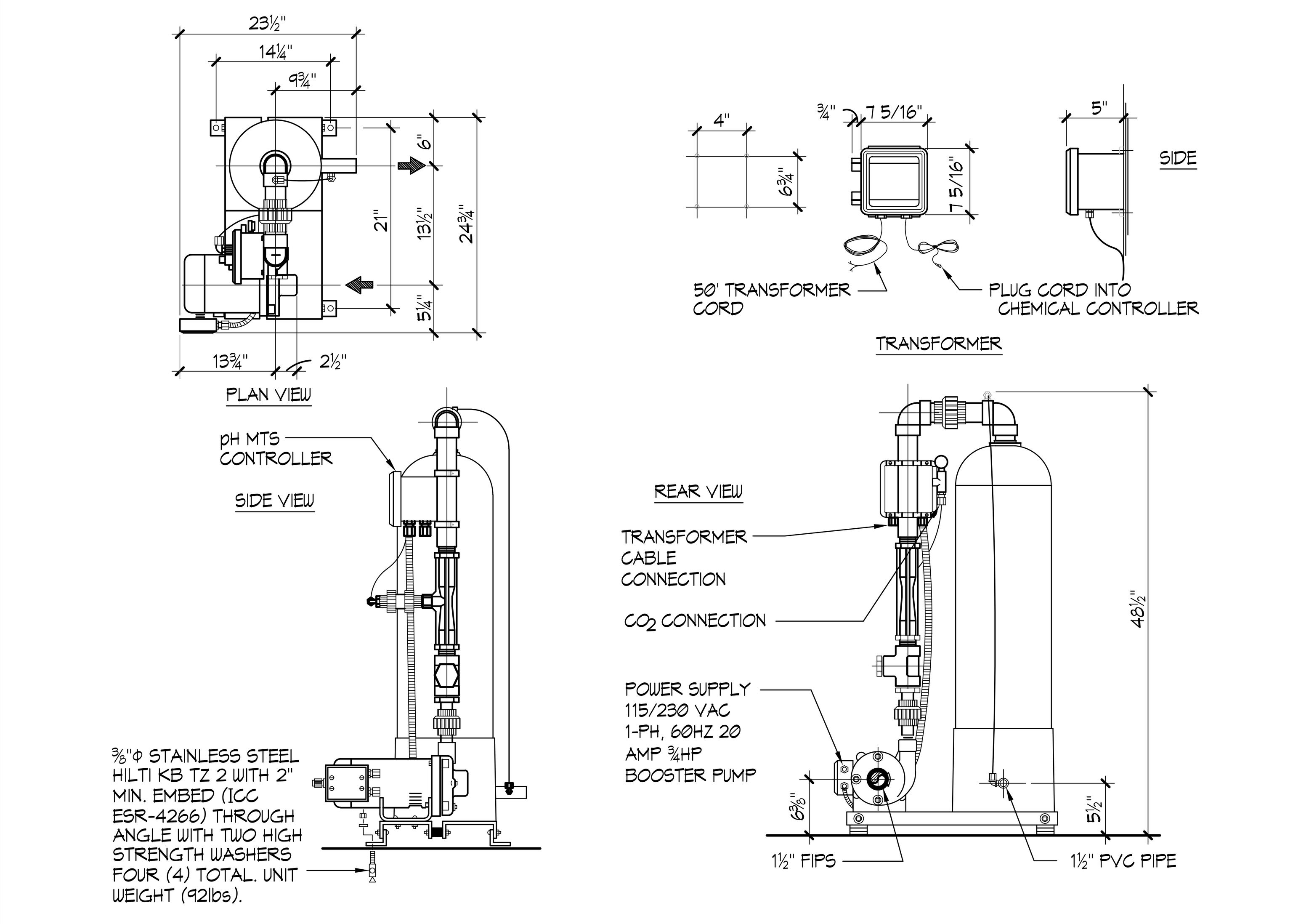

3 CARBON DIOXIDE pH MTS CONTROLLER NO SCALE

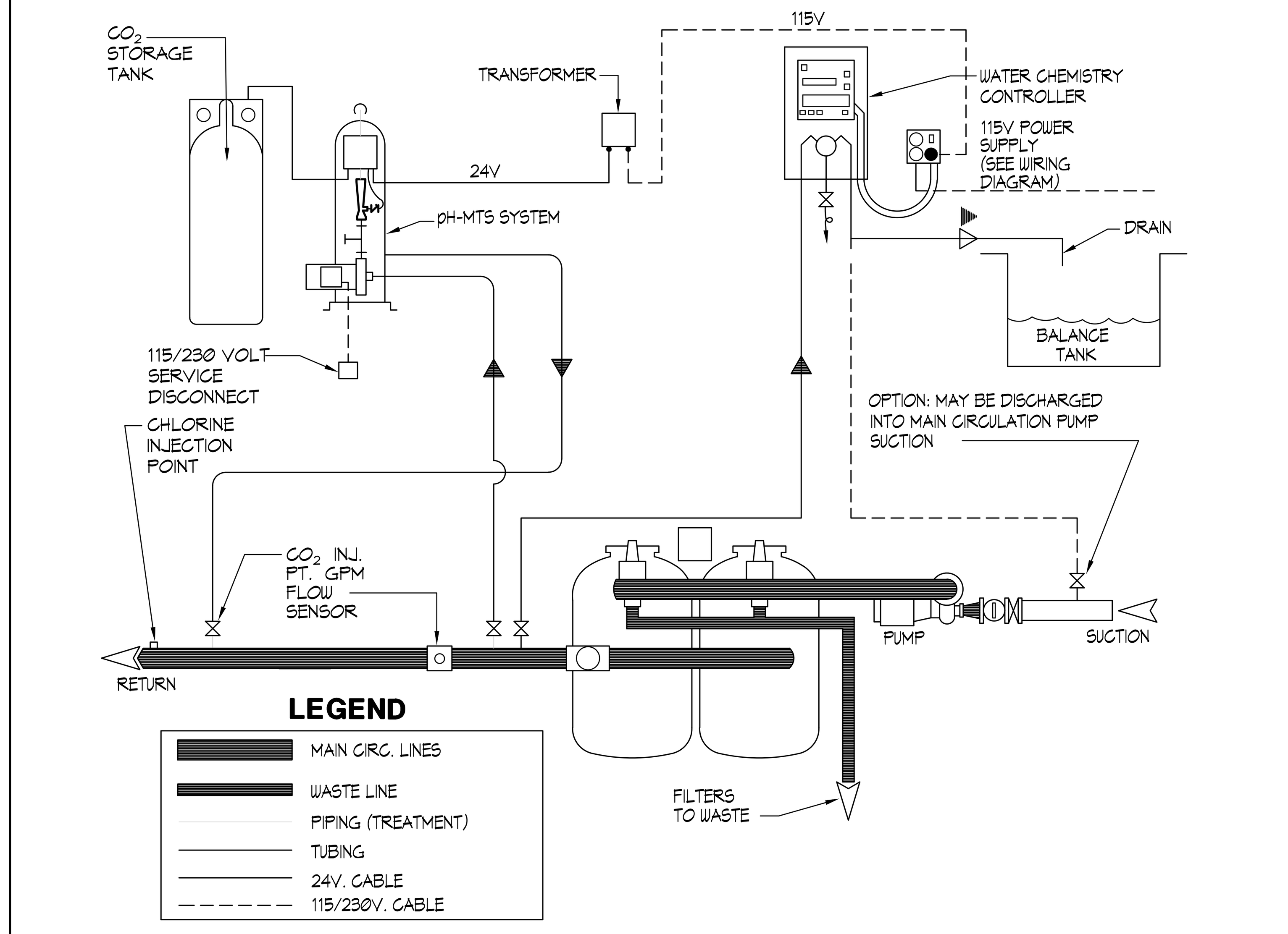

4 TYPICAL CARBON DIOXIDE pH-MTS INSTALLATION NO SCALE

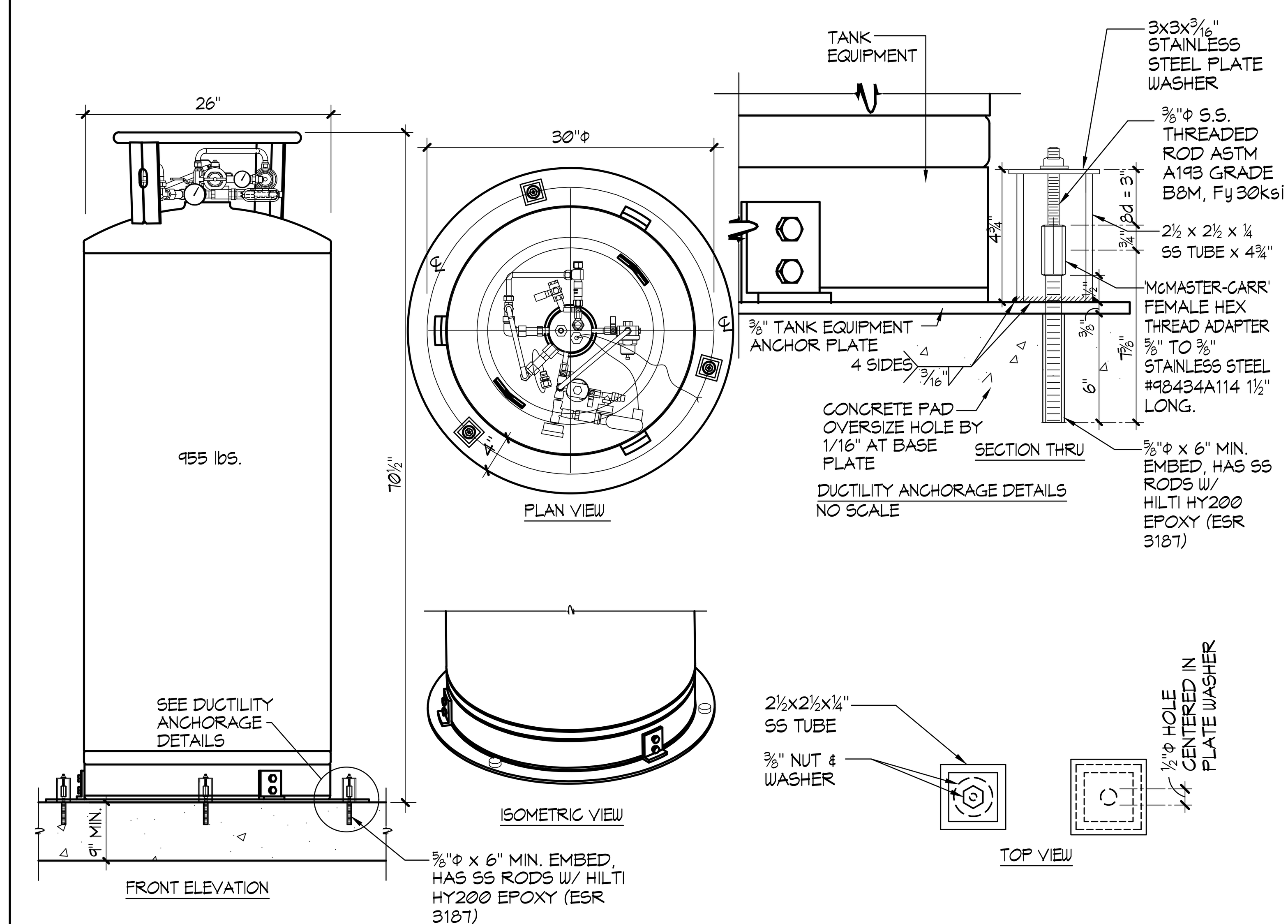

ALL HARDWARE TO BE 304 STAINLESS STEEL

5 CO2 TANK ANCHORAGE DETAIL NO SCALE

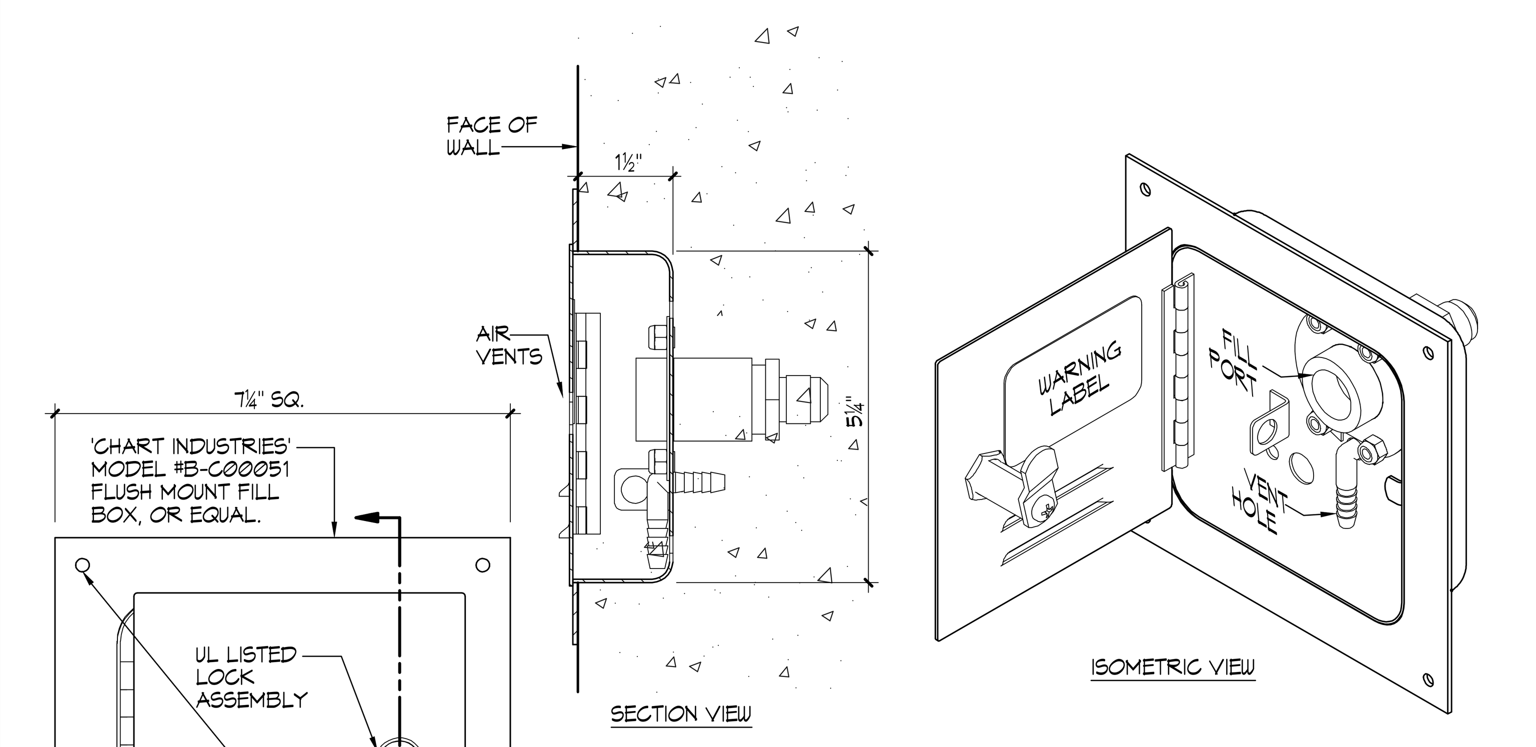

NOTES:
1. BOX MUST INCLUDE MAXIMUM ALLOWABLE WORKING PRESSURE WARNING LABEL ON INSIDE OF DOOR.
2. VENT HOLE ON CONNECTOR SHOULD POINT DOWN TOWARD BOTTOM OF BOX.
3. CONTRACTOR TO VERIFY WITH DELIVERY COMPANY FOR IDEAL FILL PORT LOCATION AND WHERE POSSIBLE LOCATE FILL PORT WITHIN SHORTEST DISTANT RUN FROM FILL LOCATION TO TANK PLACEMENT.
4. CONTRACTOR TO VERIFY LOCK ASSEMBLY WITH DELIVERY COMPANY AND SHALL PROVIDE A SET OF KEYS FOR OWNER AT SUBSTANTIAL COMPLETION.

6 C02 FLUSH MOUNT FILL BOX ½"=1'

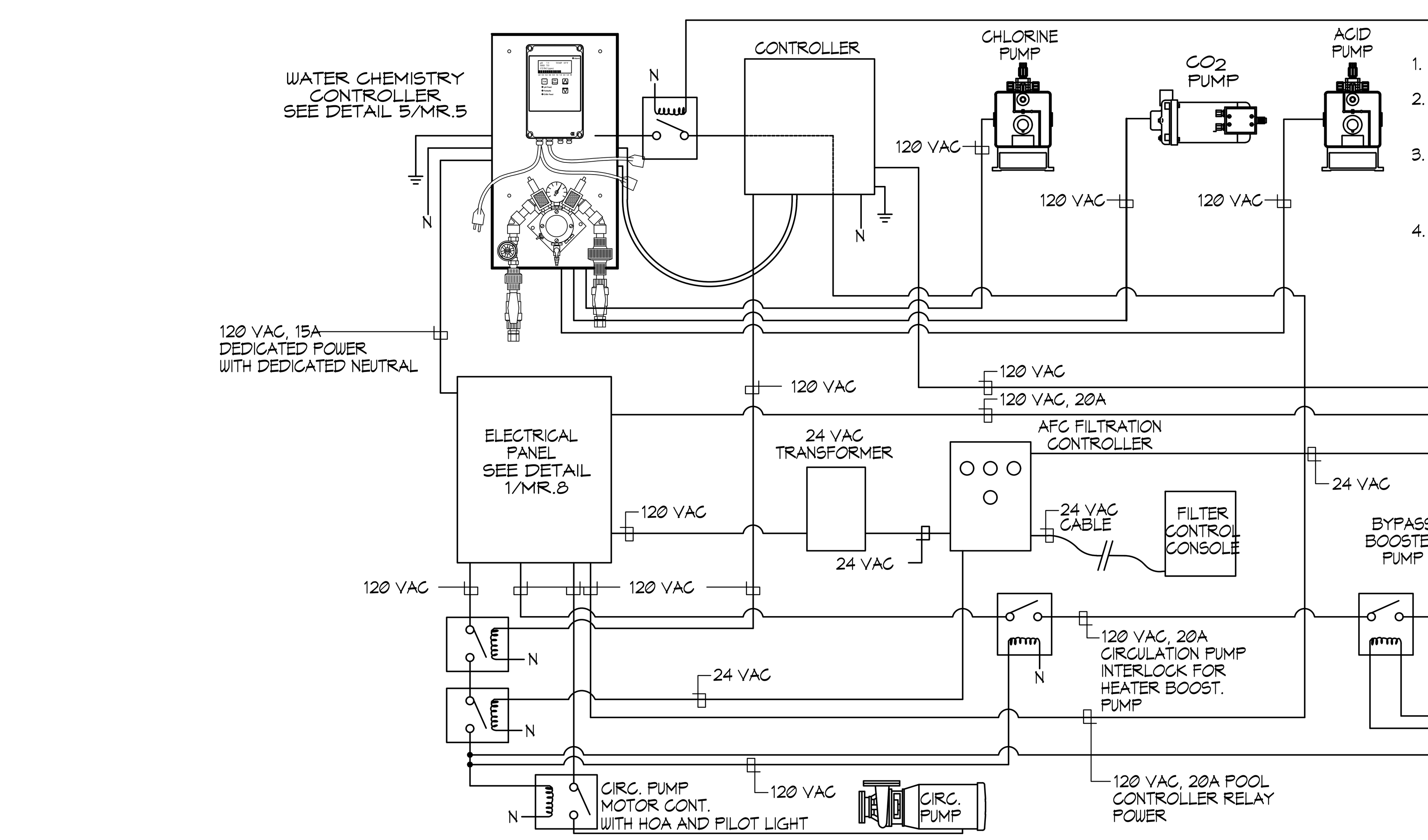

NOTES:
1. INSTALL 1 #12 GROUND CONDUCTOR IN ALL CONDUITS
2. ALL CONDUITS SHALL BE RIGID OR INTERMEDIATE GALVANIZED METAL.
3. REFER TO FILTER "OWNER'S MANUAL" FOR INSTALLATION/ OPERATING INSTRUCTIONS. CONTRACTOR SHALL BE RESPONSIBLE FOR A FULLY OPERATIONAL SYSTEM.
4. ALL WORK SHALL BE IN ACCORDANCE WITH LATEST EDITION OF THE CALIFORNIA ELECTRIC CODE (N.E.C.) FURNISH ALL LABOR, MATERIALS AND COORDINATION OF WORK HERE ON SHOWN/IMPLIED.

7 POOL MECHANICAL ELECTRICAL INTERCONNECTION DIAGRAM NO SCALE

IDENTIFICATION STAMP
DIV. OF THE STATE ARCHITECT
APP: 02-119490 INC:
REVIEWED FOR
SS ☑ FLS ☑ ACS ☑
DATE: 09/13/2022

LPA
ARCHITECTURE ENGINEERING INTERIORS LANDSCAPE ARCHITECTURE PLANNING
916-287-2400 Office
916-287-2401 Fax
LPADesignStudios.com
431 I Street,
Suite 107
Sacramento, California 95814

AQUATIC DESIGN GROUP
2226 Faraday Ave. Carlsbad, CA 92008
AquaticDesignGroup.com
760.438.8400

LICENSED ARCHITECT GREGORY S. FEBBO C-35882 REN. 07/31/23 STATE OF CALIFORNIA

This document and all other project documents, ideas, aesthetics and designs incorporated therein are instruments of service. All project documents are copyright protected, are the property of LPA, Inc. (LPA) and cannot be lawfully used in whole or in part for any project or purpose except as set forth in the contract/agreement between LPA and its Client. The unauthorized disclosure and/or use of the project documents (including the creation of derivative works), may give rise to liability for copyright infringement, unlawful disclosure, use or misappropriation of property rights held by LPA. The unauthorized use of the project documents will give rise to the recovery of monetary losses and damages including attorney fees and costs for which the unauthorized user will be held liable. Project documents describe the design intent of the work and are not a representation of as-built or existing conditions. LPA is not responsible for any discrepancies between the project documents and the existing conditions.
© LPA, Inc.

DAVIS SR HIGH SCHOOL AQUATICS CENTER
315 W 14TH ST., DAVIS, CA 95616
Developed for DAVIS JOINT UNIFIED SCHOOL DISTRICT

Revision	Date

Submittal	Date
50% DD REVIEW	06/15/2021
50% CD SUBMITTAL	07/28/2021
100% CD REVIEW	10/08/2021
100% CD DSA SUBMITTAL	10/22/2021

Job Number	1904413
Date Published	10/22/2021
Checked By	SJF
Scale	AS NOTED

DETAILS

AQ2.4

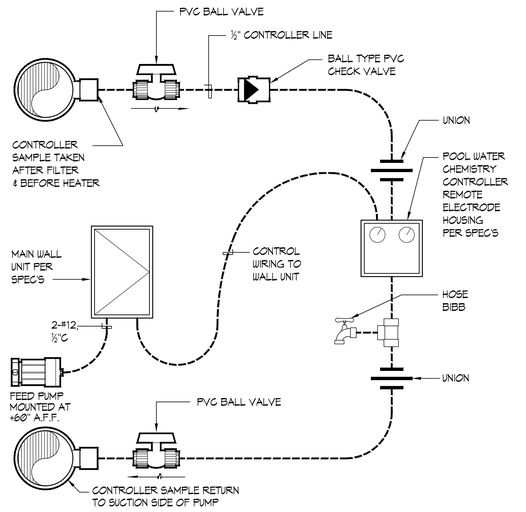

1 WATER CHEMISTRY CONTROLLER SCHEMATIC

NO SCALE

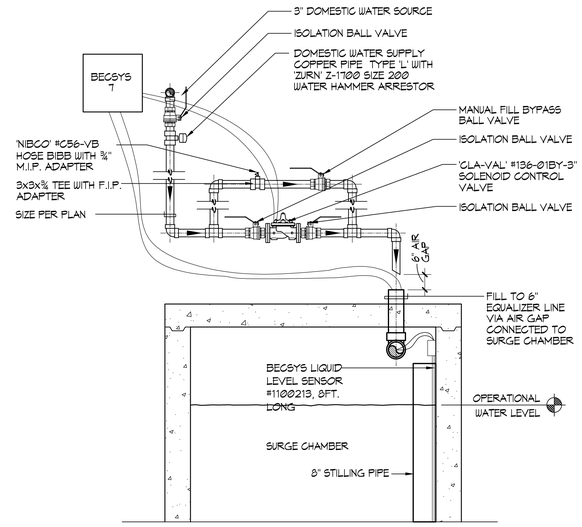

2 AUTOMATIC/MANUAL WATER MAKE-UP SCHEMATIC

NO SCALE

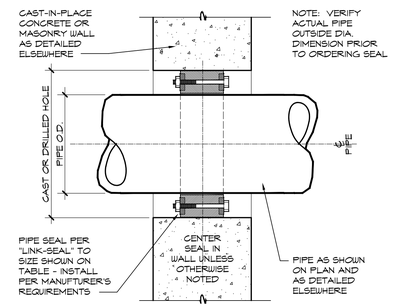

PIPE SIZE (NOMINAL)	OUTSIDE PIPE DIA.	CAST OR DRILL HOLE (PIPE O.D.)	LINK SEAL SIZE NO.	NO. OF LINKS PER SEAL
		CAST IN CONCRETE NOSE DIA. (I.D.)		
½"	0.840	2.0	L-S-200	4
¾"	1.050	2.5	L-S-275	5
1"	1.315	3.0	L-S-300	4
1¼"	1.660	3.0	L-S-275	7
1½"	1.900	3.5	L-S-300	5
2"	2.375	4.0	L-S-300	6
2½"	2.875	4.0	L-S-200	9
3"	3.50	5.0	L-S-300	8
3½"	4.00	6.0	L-S-325	9
4"	4.50	6.0	L-S-300	10
5"	5.563	8.0	L-S-425	8
6"	6.625	10.0	L-S-475	10
8"	8.625	12.0	L-S-475	12
10"	10.75	14.0	L-S-400	10
12"	12.75	16.0	L-S-400	12
14"	14.00	18.0	L-S-325	15
16"	16.00	18.0	L-S-325	17
18"	18.00	23.0	L-S-500	16
20"	20.00	25.0	L-S-500	18
22"	22.00	27.0	L-S-500	19
24"	24.00	29.0	L-S-500	21
26"	26.00	31.0	L-S-500	23
28"	28.00	33.0	L-S-500	24
30"	30.00	35.0	L-S-500	26
32"	32.00	37.0	L-S-500	28
34"	34.00	39.0	L-S-500	29
36"	36.00	41.0	L-S-500	30

3 PIPE SEAL TO WALL / FLOOR

NO SCALE

DESIGNATION: 'SP' — VOLTAGE: 120/208V 3PH 4W — 200AMP ☒MAIN BREAKER ☐MAIN LUG — ☐RECESSED ☒SURFACE — LOCATION: MECHANICAL EQUIP. RM. — MINIMUM DEVICE A.I.C. RATING ☒10,000 ☐14,000 — PANELBOARD KEY NOTES: (1) ◯ ◯ ◯

DESCRIPTION:	C/B	CIR NO.	φ A	φ B	φ C	CIR NO.	C/B	DESCRIPTION:
SP UNDERWATER LIGHTS (1)	20/1	1	696 1200			2	20/1	SP FILTER AFC
		3		696 1200		4		SP FILTER PRESS. AMP PUMP
		5			696 1200	6		SP WATER CHEM. CONTROL
		7	696 360			8		SP WATER CHEM. RELAY
		9		696 360		10		SP CIRC PUMP INTERCONN.
		11			696 360	12		SP CIRC. PUMP MTR. CONT.
		13	696 1440			14		SP HEATER IGNIT/FAN
SP DECK RECEPTACLES		15		720 1440		16		SP HEATER IGNIT/FAN
		17			720 720	18		SP FILTER PRIORITY VALVE
		19	720 960			20		SP CHLORINE FEED
		21		720 1056		22	20/2	SP CO2 FEED
		23			720 1056	24	2	1 HP
		25	720 720			26	20/1	SPARE (1)
		27		720 720		28		SPARE
SP TIMING SYS. SCOREBOARD		29			720 720	30		SP TIMING SYS. SCOREBOARD
		31	720 720			32		
		33		720 720		34		
		35			720 720	36		
		37	720			38		
SPACE		39				40		SPACE
		41				42		
TOTAL PER PHASE			11,088	9,768	9,048			13,170 ÷ 120v = 110 AMPS
+ 25% L.C.L.			2,082	1,728	1,908			
TOTAL			13,170	11,496	10,956			

(1) GFI CIRCUIT SP = SWIMMING POOL

4 PANEL SCHEDULE

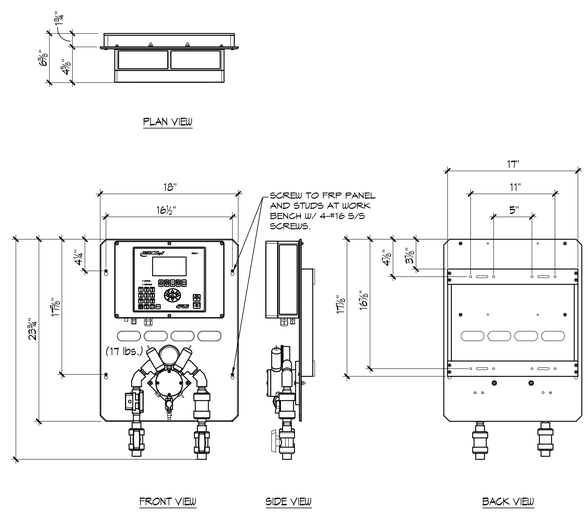

5 BECSYS 7 WATER CHEMISTRY CONTROLLER

1½"=1'-0"

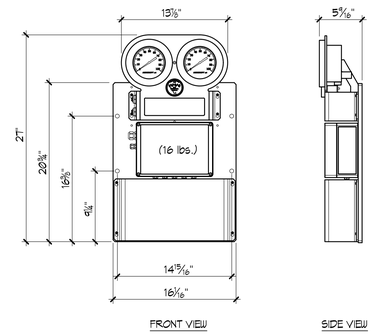

6 BECSYS FILTER INTERFACE SYSTEM

1½"=1'-0"

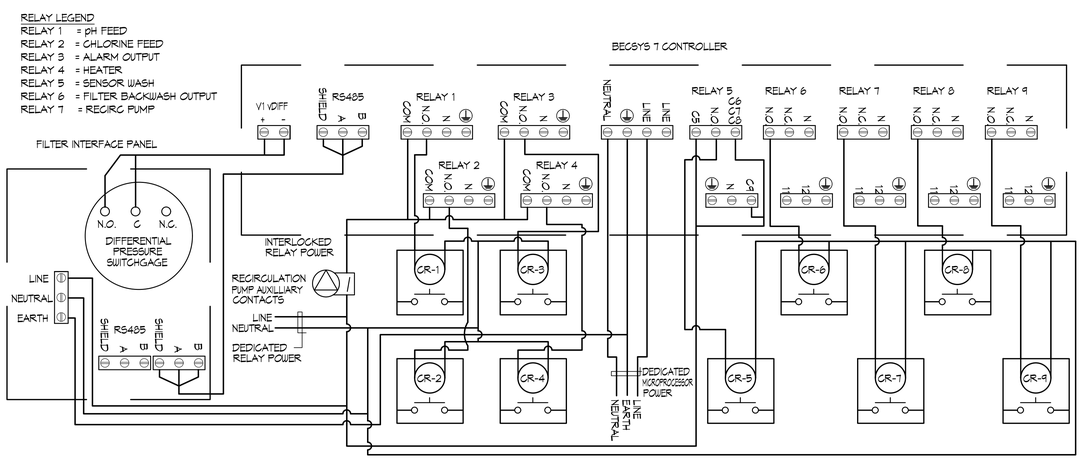

7 BECSYS 7 CONTROLLER

NO SCALE

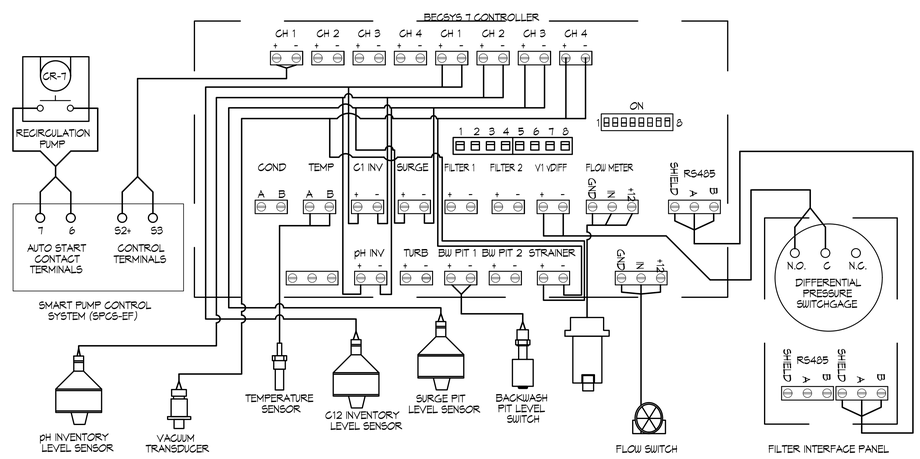

8 BECSYS 7 CONTROLLER

NO SCALE

IDENTIFICATION STAMP
DIV. OF THE STATE ARCHITECT
APP: 02-119490 INC:
REVIEWED FOR
SS ☑ FLS ☑ ACS ☑
DATE: 09/13/2022

LPA
ARCHITECTURE ENGINEERING INTERIORS
LANDSCAPE ARCHITECTURE PLANNING
916-287-2400 Office
916-287-2401 Fax
LPADesignStudios.com
431 I Street,
Suite 107
Sacramento, California 95814

AQUATIC DESIGN GROUP
2236 Faraday Ave. Carlsbad, CA 92008
AquaticDesignGroup.com
760-438.8400

LICENSED ARCHITECT
GREGORY S. FERRELL
C35802
REN. 07/31/22
STATE OF CALIFORNIA

This document and all other project documents, ideas, aesthetics and designs incorporated therein are instruments of service. All project documents are copyright protected, are the property of LPA, Inc. (LPA) and cannot be lawfully used in whole or in part for any project or purpose except as set forth in the contractual agreement between LPA and its Client. The unauthorized disclosure and/or use of the project documents (including the creation of derivative works), may give rise to liability for copyright infringement, unlawful disclosure, use or misappropriation of property rights held by LPA. The unauthorized use of the project documents will give rise to the recovery of monetary losses and damages including attorney fees and costs for which the unauthorized user will be held liable.
Project documents describe the design intent of the work and are not a representation of as-built or existing conditions. LPA is not responsible for any discrepancies between the project documents and the existing conditions.

© LPA, Inc.

DAVIS SR HIGH SCHOOL
AQUATICS CENTER
315 W 14TH ST., DAVIS, CA 95616

Developed for
DAVIS JOINT UNIFIED SCHOOL DISTRICT

Revision	Date

Submittal	Date
50% DD REVIEW	06/15/2021
100% DD SUBMITTAL	07/26/2021
50% CD REVIEW	10/08/2021
100% CD DSA SUBMITTAL	10/22/2021

Job Number	1904413
Date Published	10/22/2021
Checked By	SJF
Scale	AS NOTED

DETAILS

AQ2.5

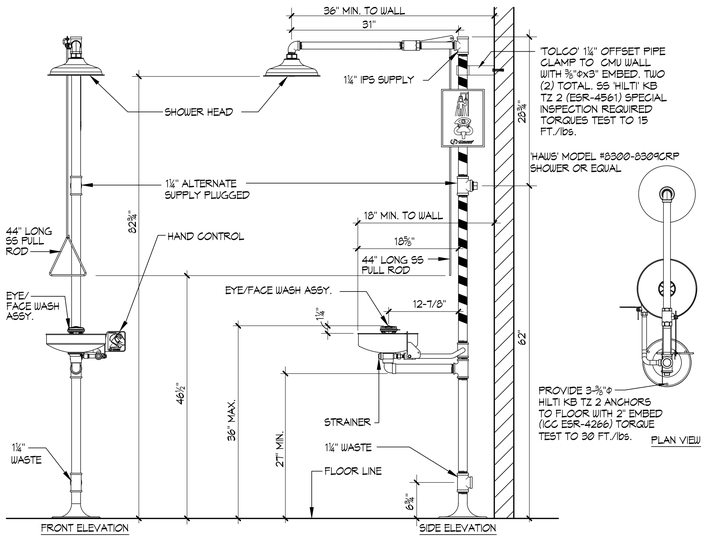

1 TYPICAL EYEWASH/SHOWER DETAIL

NO SCALE

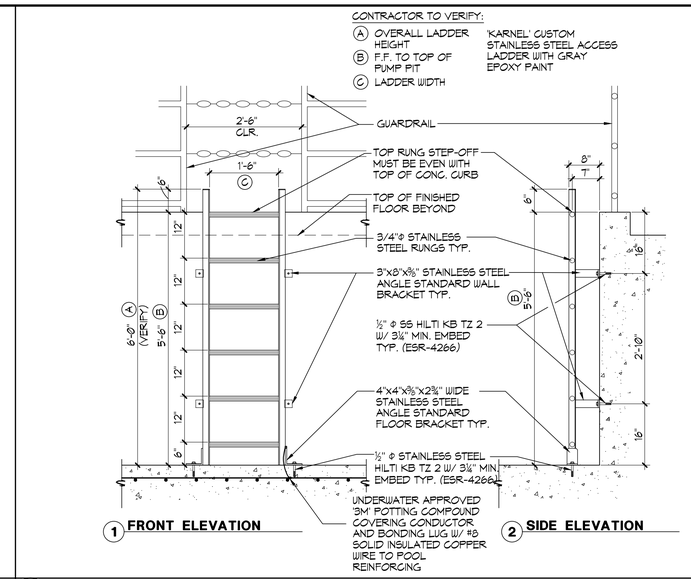

2 PUMP PIT ACCESS LADDER

¾"=1'-0"

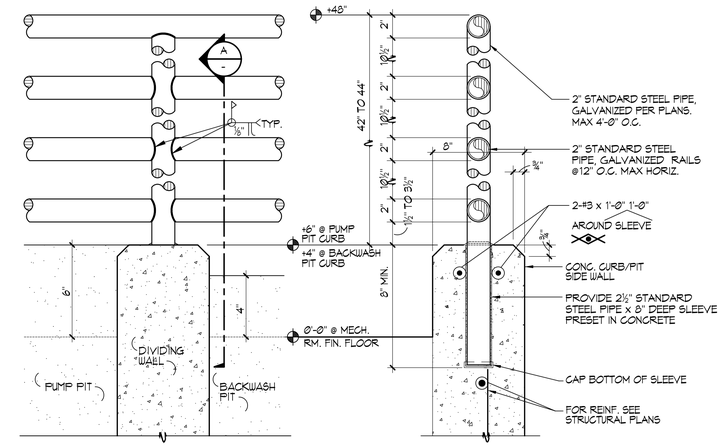

3 PIT GUARD RAIL

3"=1'-0"

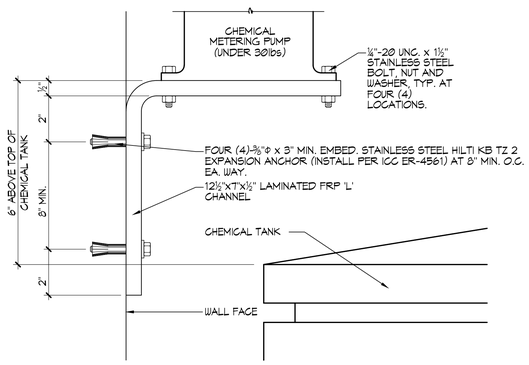

4 CHEMICAL PUMP SHELF

6"=1'-0"

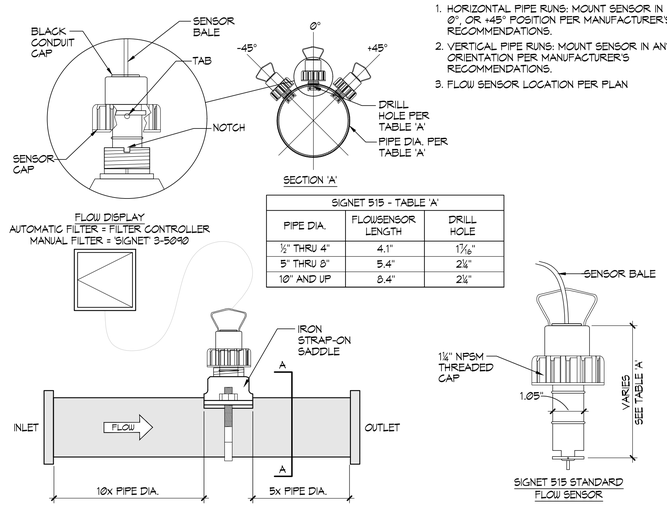

NOTES:

1. HORIZONTAL PIPE RUNS: MOUNT SENSOR IN -45°, 0°, OR +45° POSITION PER MANUFACTURER'S RECOMMENDATIONS.
2. VERTICAL PIPE RUNS: MOUNT SENSOR IN ANY ORIENTATION PER MANUFACTURER'S RECOMMENDATIONS.
3. FLOW SENSOR LOCATION PER PLAN

SIGNET 515 - TABLE 'A'		
PIPE DIA.	FLOWSENSOR LENGTH	DRILL HOLE
½" THRU 4"	4.1"	1 7/16"
5" THRU 8"	5.4"	2⅛"
10" AND UP	8.4"	2⅛"

5 SIGNET FLOWMETER

NO SCALE

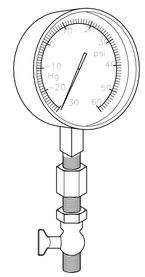

4½" S/S CASED LIQUID FILLED PRESSURE GAUGES SHALL HAVE A DIAL RANGE PRESSURE OF 60psi AND VACUUM RANGE OF 30" Hg THE MINOR GRADUATIONS SHALL HAVE A PRESSURE OF 2psi AND VACUUM OF 2" Hg, ¼" NPT PER SPECIFICATIONS.

SNUBBER

'PETCOCK' MODEL #A10, BRASS

NOTES:

1. PRESSURE GAUGES SHALL BE INSTALLED BY MEANS OF DRILLING AND TAPPING PIPE TO BE MONITORED. THE GAUGE SHALL THEN BE THREADED INTO THE PIPE. PROVIDE WITH SNUBBER AND PET COCK.
2. GAUGE MAY BE USED WHEREVER CRUCIAL VACUUM OR PRESSURE READINGS ARE ESSENTIAL.

6 PRESSURE/VACUUM GAUGE

6"=1'-0"

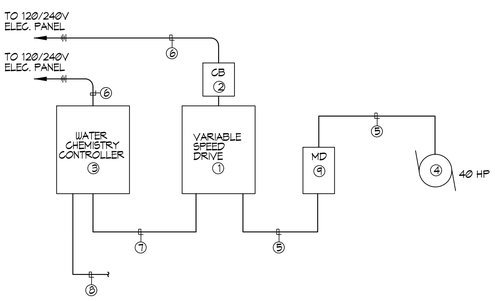

NOTES:

1. VARIABLE SPEED DRIVE MOTOR CONTROL CABINET, SEE PLANS AND SPECIFICATIONS.
2. ENCLOSED CIRCUIT BREAKER, SEE SINGLE LINE DIAGRAM.
3. WATER CHEMISTRY/FILTER CONTROL UNIT, SEE PLANS.
4. CONNECT TO CIRCULATION PUMP MOTOR, SEE PLANS.
5. MOTOR FEEDERS, SEESINGLE LINE DIAGRAM.
6. 120 VOLT BRANCH CIRCUITS, SEE PLANS.
7. ¾"C, (4) #12, (1) #12 GND. (120 VOLT CONTROL WIRING)
8. 24 VOLT SIGNAL AND SENSOR CABLING, SEE SPECIFICATIONS AND INSTALLATION INSTRUCTIONS FOR ADDITIONAL REQUIREMENTS.
9. MOTOR DISCONNECT, SEE PLANS.

7 TYPICAL WIRING SCHEMATIC AT SPCS UNIT

NO SCALE

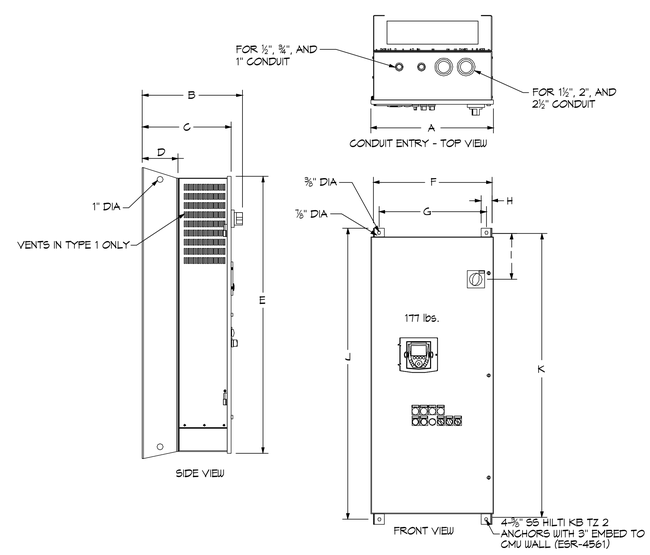

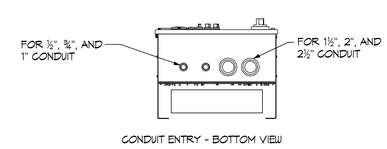

NOTE:
PROVIDE AT LEAST 3" OF MOUNTING CLEARANCE ON EACH SIDE OF THE DRIVE CONTROLLER.
PROVIDE AT LEAST 6" OF MOUNTING CLEARANCE ON EACH TOP AND BOTTOM OF THE DRIVE CONTROLLER

'SPCS' EKO-FLEX SIZING TABLE												
HP	HP	WEIGHT	DIMENSIONS									
460V	208/230V	LBS	A	B	C	D	E	F	G	H	I	J	K
30 TO 50	15 TO 25	177	20.65"	16.83"	14.83"	6.00"	46.64"	20.00"	18.04"	1.86"	7.75"	49.02"	47.83"

8 'SPCS' EKO-FLEX ENCLOSURE DIMENSIONS

NO SCALE

IDENTIFICATION STAMP
DIV. OF THE STATE ARCHITECT
APP: 02-119490 INC:
REVIEWED FOR
SS ☑ FLS ☑ ACS ☑
DATE: 09/13/2022

LPA
ARCHITECTURE ENGINEERING INTERIORS
LANDSCAPE ARCHITECTURE PLANNING
916-287-2400 Office
916-287-2401 Fax
LPADesignStudios.com
431 I Street,
Suite 107
Sacramento, California 95814

AQUATIC DESIGN GROUP
2236 Faraday Ave. Carlsbad, CA 92008
AquaticDesignGroup.com
760.438.8400

LICENSED ARCHITECT
STEPHEN J. FIELD
C35802
REN. 07/31/23
STATE OF CALIFORNIA

This document and all other project documents, ideas, aesthetics and designs incorporated therein are instruments of service. All project documents are copyright protected, are the property of LPA, Inc. (LPA) and cannot be lawfully used in whole or in part for any project or purpose except as set forth in the contractual agreement between LPA and its Client. The unauthorized disclosure and/or use of the project documents (including the creation of derivative works), may give rise to liability for copyright infringement, unlawful disclosure, use or misappropriation of property rights held by LPA. The unauthorized use of the project documents will give rise to the recovery of monetary losses and damages including attorney fees and costs for which the unauthorized user will be held liable. Project documents describe the design intent of the work and are not a representation of as-built or existing conditions. LPA is not responsible for any discrepancies between the project documents and the existing conditions.

© LPA, Inc.

DAVIS SR HIGH SCHOOL
AQUATICS CENTER
315 W 14TH ST., DAVIS, CA 95616

Developed for
DAVIS JOINT UNIFIED SCHOOL DISTRICT

Revision	Date

Submittal	Date
50% DD REVIEW	06/15/2021
100% DD SUBMITTAL	07/26/2021
50% CD REVIEW	10/08/2021
100% CD DSA SUBMITTAL	10/22/2021

Job Number	1904413
Date Published	10/22/2021
Checked By	SJF
Scale	AS NOTED

DETAILS

AQ2.6

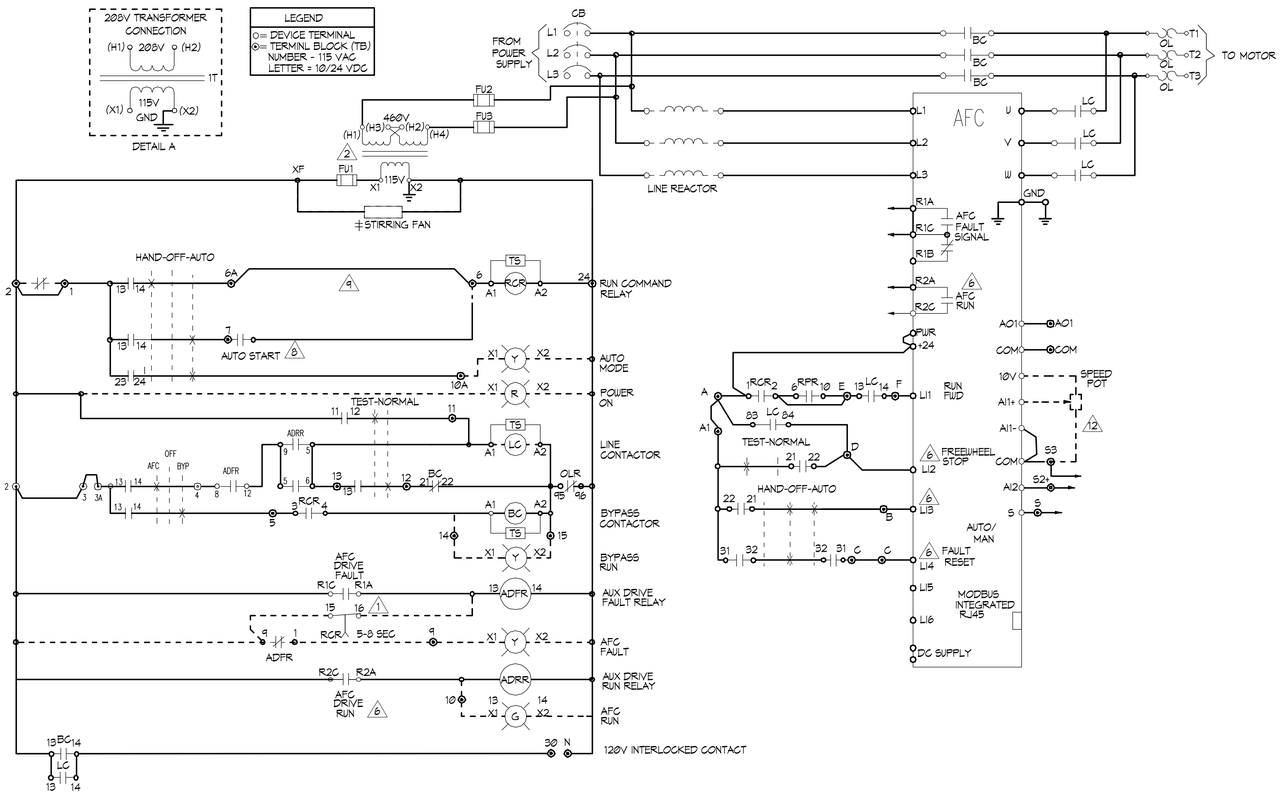

EKO-FLEX ATV61 FACTORY CONFIGURATION					
MENU	No	SUB-MENU	DESCRIPTION	CODE	ADJ.
SIM	1.1	----	2/3 WIRE CONTROL	tCC	2C
SIM	1.1	----	PUMPS FANS	CFG	PnF
SIM	1.1	----	STANDARD MOT. FREQ (HZ)	bFr	60
SIM	1.1	----	ACCELERATION (SEC)	ACC	10
SIM	1.1	----	DECELERATION (SEC)	dEC	10
SIM	1.1	----	LOW SPEED (HZ)	LSP	3
SIM	1.3	----	SWITCHING FREQ. (HZ)	SCr	8
I - O	1.5	----	2 WIRE TYPE	tCt	LEL
I - O	1.5	AI2 CONFIG.	AI2 MIN. VALUE (mA)	CrI2	4
I - O	1.5	R2 CONFIG.	R2 ASSIGN - DRIVE RUNNING	r2C	rUn
CtL	1.6	----	REF. 1 CHAN	FR1	HMI
CtL	1.6	----		FR1	AI1
CtL	1.6	----	PROFILE	CHCF	SEP
FUn	1.7	STOP CONFIG.	FREEWHEEL STOP ASSIGN	nST	LI2
FUn	1.7	REFERENCE SWITCH	REF. 1B SWITCHING	rCb	LI3
FUn	1.7	REFERENCE SWITCH	REF. 1B CHAN	Fr1b	AI2
FLt	1.8	FAULT RESET	FAULT RESET	rSF	LI4
FLt	1.8	CATCH ON THE FLY	CATCH ON THE FLY	FLR	YES
FLt	1.8	OUTPUT PHASE LOSS	OUTPHASE LOSS	PDL	NO
COM	1.9	FORCED LOCAL	FORCED LOCAL ASSIGN.	FLt	LI4

DESCRIPTION	TYPE 1	TYPE 12K	TYPE 3R
‡ STIRRING FANS	10-100 HP 460V, 7.5-50HP 208/230V	10-100 HP 460V, 7.5-50HP 208/230V	NA
‡ VENTILIATION FAN	NA	NA	ALL HP
‡ SPACE HEATER	NA	NA	ALL HP

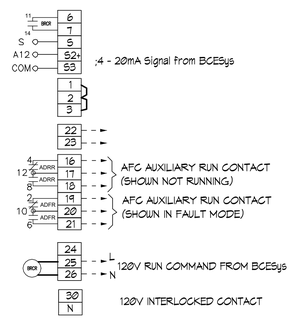

USER CONNECTIONS

NOTES:

1. RCR TIMED CONTACT USED ONLY IF LINE CONTACTOR IS SUPPLIED
2. CONTROL TRANSFORMER SHOWN FOR 460V PRIMARY. FOR 230V PRIMARY, JUMPER H2-H3 IS
6. PROGRAMMED I/O SEE CONTROLLER FUNCTION CONFIGURATION TABLE.
8. BECs RUN COMMAND RELAY (BRCR)
9. JUMPER USED WHEN START-STOP PUSH BUTTONS NOT USED.

1 'SPCS' EKO-FLEX VARIABLE FREQUENCY DRIVE SYSTEM SCHEMATIC NO SCALE

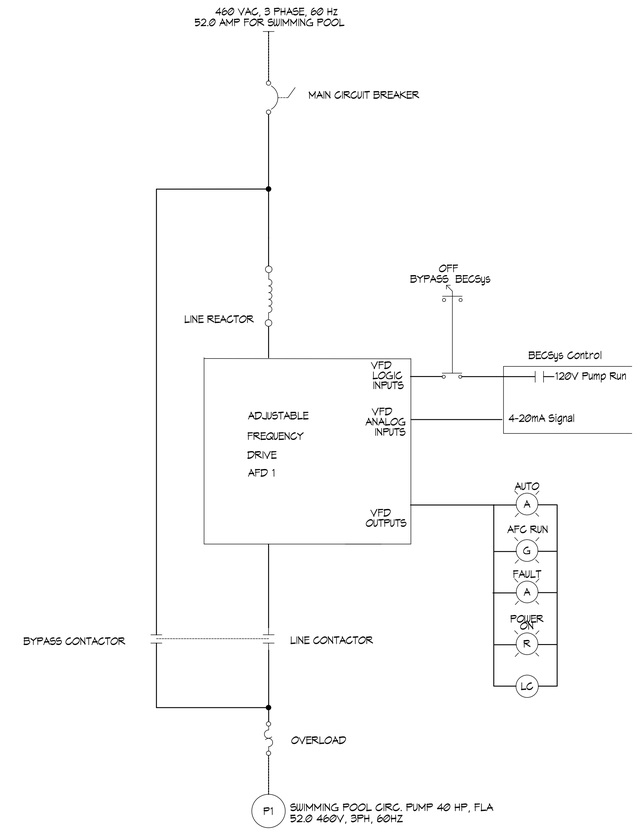

2 'SPCS' EKO-FLEX SINGLE LINE DIAGRAM NO SCALE

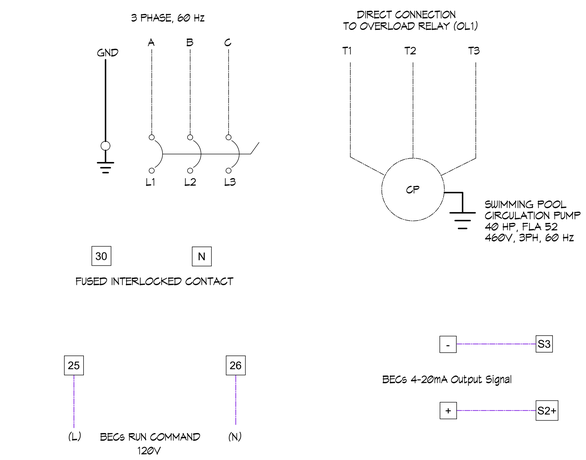

3 'SPCS' EKO-FLEX FIELD CONNECTION DIAGRAM NO SCALE

IDENTIFICATION STAMP
DIV. OF THE STATE ARCHITECT
APP: 02-119490 INC:
REVIEWED FOR
SS ☑ FLS ☑ ACS ☑
DATE: 09/13/2022

LPA
ARCHITECTURE ENGINEERING INTERIORS
LANDSCAPE ARCHITECTURE PLANNING

916-287-2400 Office
916-287-2401 Fax
LPADesignStudios.com
431 I Street,
Suite 107
Sacramento, California 95814

AQUATIC DESIGN GROUP
2236 Faraday Ave. Carlsbad, CA 92008
AquaticDesignGroup.com
760.438.8400

LICENSED ARCHITECT
CHRISTOPHER S. CONNELLY
C35802
REN. 07/31/23
STATE OF CALIFORNIA

This document and all other project documents, ideas, aesthetics and designs incorporated therein are instruments of service. All project documents are copyright protected, are the property of LPA, Inc. (LPA) and cannot be lawfully used in whole or in part for any project or purpose except as set forth in the contractual agreement between LPA and its Client. The unauthorized disclosure and/or use of the project documents (including the creation of derivative works), may give rise to liability for copyright infringement, unlawful disclosure, use or misappropriation of property rights held by LPA. The unauthorized use of the project documents will give rise to the recovery of monetary losses and damages including attorney fees and costs for which the unauthorized user will be held liable. Project documents describe the design intent of the work and are not a representation of as-built or existing conditions. LPA is not responsible for any discrepancies between the project documents and the existing conditions.

© LPA, Inc.

DAVIS SR HIGH SCHOOL
AQUATICS CENTER
315 W 14TH ST., DAVIS, CA 95616

Developed for
DAVIS JOINT UNIFIED SCHOOL DISTRICT

Revision	Date

Submittal	Date
50% DD REVIEW	06/15/2021
100% DD SUBMITTAL	07/26/2021
50% CD REVIEW	10/08/2021
100% CD DSA SUBMITTAL	10/22/2021

Job Number	1904413
Date Published	10/22/2021
Checked By	SJF
Scale	AS NOTED

DETAILS

AQ2.7

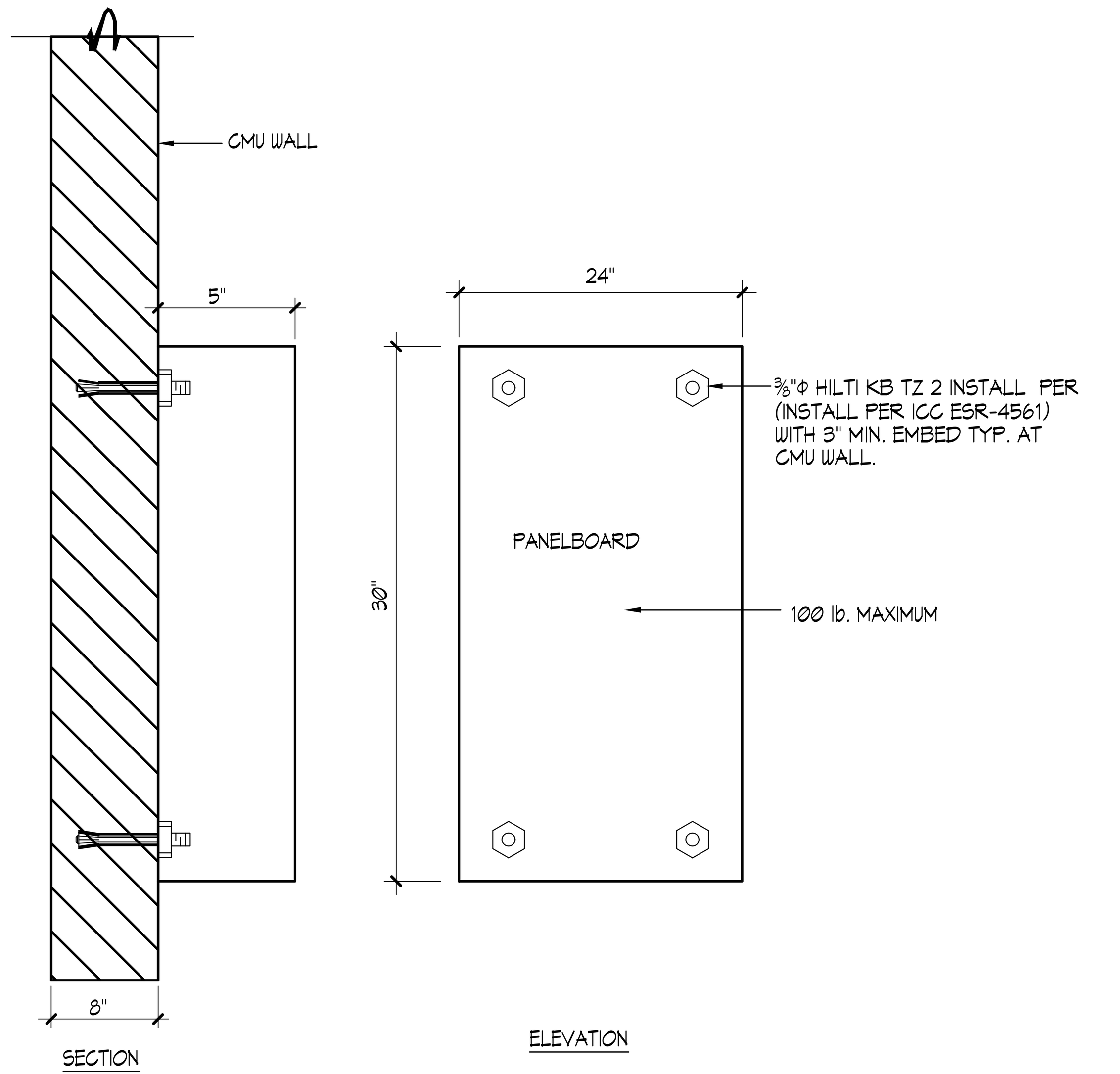

1 PANELBOARD MOUNTING DETAIL

NO SCALE

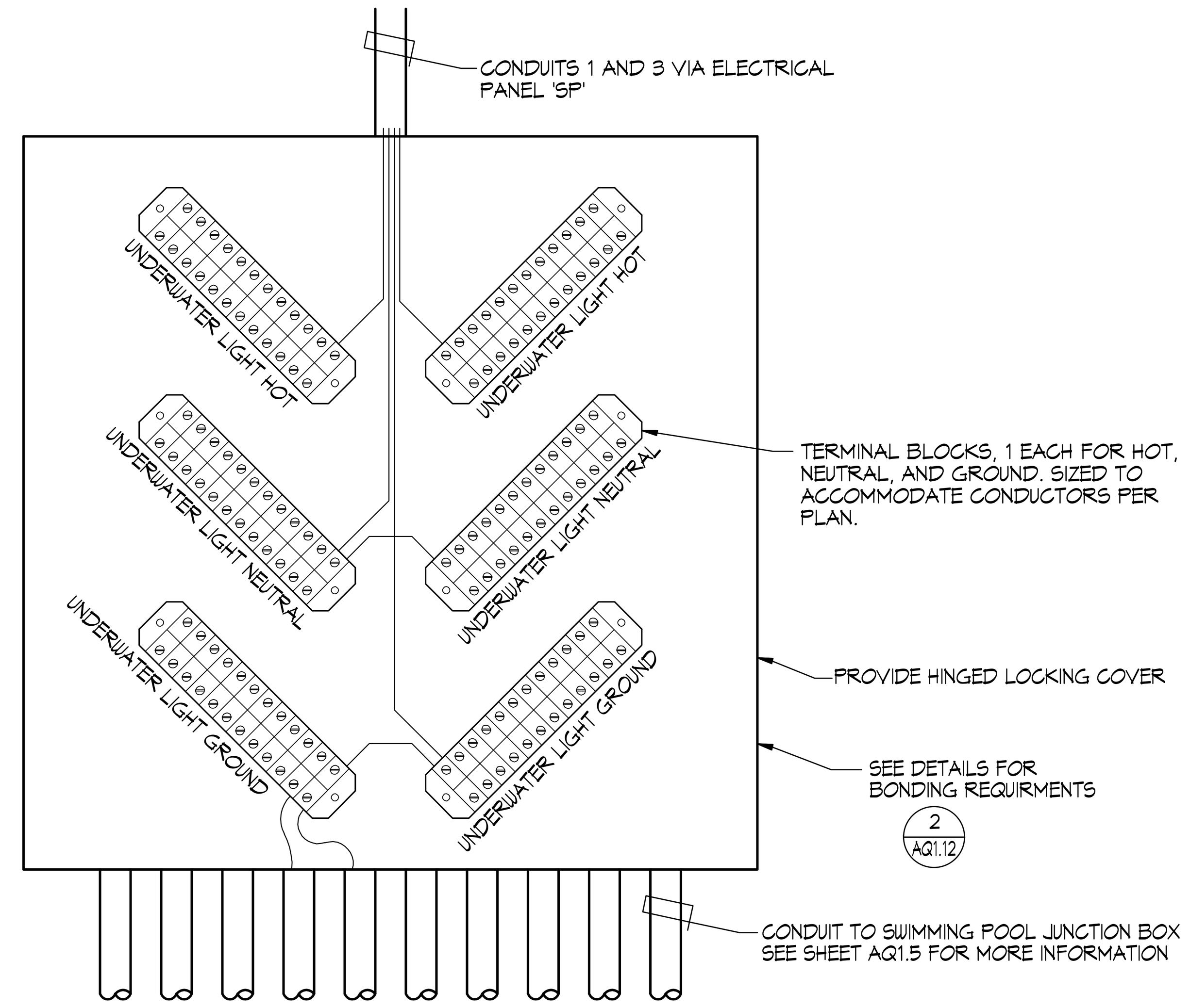

2 UNDERWATER LIGHT CONTACTOR PANEL

NO SCALE

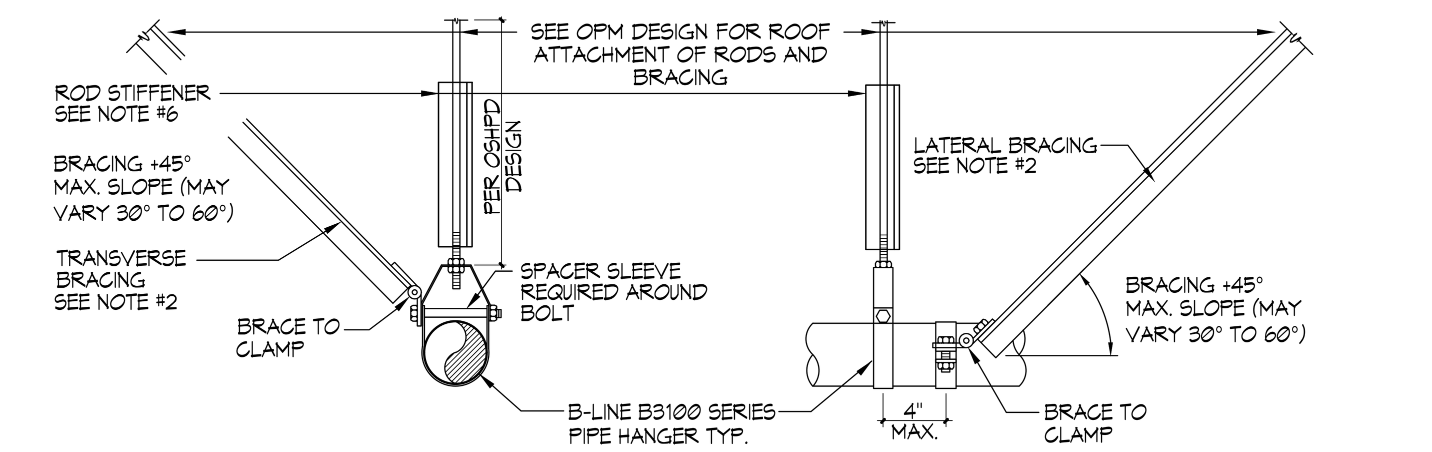

HANGER/BRACE PERPENDICULAR

HANGER/BRACE LONGITUDINAL

HANGER ROD SIZES/TABLE

3/8" Φ AT 3" PIPING MAX. ROD LENGTH = 158" MAX PER OPM PG. C1.12
⅝"Φ AT 4" PIPING MAX. ROD LENGTH = 158" MAX PER OPM PG. C1.34
¾"Φ AT 6" PIPING MAX. ROD LENGTH = 158" MAX PER OPM PG. C1.44
¾"Φ AT 8" PIPING MAX. ROD LENGTH = 158" MAX PER OPM PG. C1.44
¾"Φ AT 12" PIPING MAX. ROD LENGTH = 158" MAX PER OPM PG. C1.44

MAX. PIPE HANGER SPACING

4" PIPING OR SMALLER = 6'-0" O.C.
6" PIPING = 6'-0" O.C.
8" PIPING = 6'-0" O.C.
10" PIPING = 6'-0" O.C.

NOTES:

1. REFER TO OSHPD (OPM #0043-13) FOR PIPE HANGER HARDWARE & INSTALLATION. SEE SHEET AQ2.9 THROUGH AQ2.11
2. PROVIDE BRACING FOR EACH PIPE HANGER IN TWO DIRECTIONS AT THE FOLLOWING CONDITIONS. REFER TO OPM DESIGN SHEETS.
   - AT EACH CHANGE IN PIPE RUN DIRECTION
   - MID LENGTH OF PIPE RUN
   - SPACING NOT TO EXCEED 12'-0" O.C.

   1⅝x1⅝x12GA SINGLE STRUT (5'-0" LENGTH MAX)
   1⅝x1⅝X12GA DOUBLE STRUT (14'-6" LENGTH MAX)
3. ALL HARDWARE SHALL BE STAINLESS STEEL OR GALVANIZED SEE SPECIFICATION FOR ADDITIONAL INFORMATION.
4. FOR COPPER TUBING USE COPPER PLATED OR PAINTED B3104CT, FELT LINED B3100F, OR PLASTIC COATED B3100C.
5. REFER TO AQ2.1 FOR PIPE HANGER LOCATIONS.
6. PROVIDE ROD STIFFENER WHEN TRANSVERSE OR LONGITUDINAL BRACING IS USED AND ROD LENGTHS EXCEEDS 37", SEE OPM DESIGN

3 'UNISTRUT' PIPING HANGER / SUPPORT DETAILS

NO SCALE

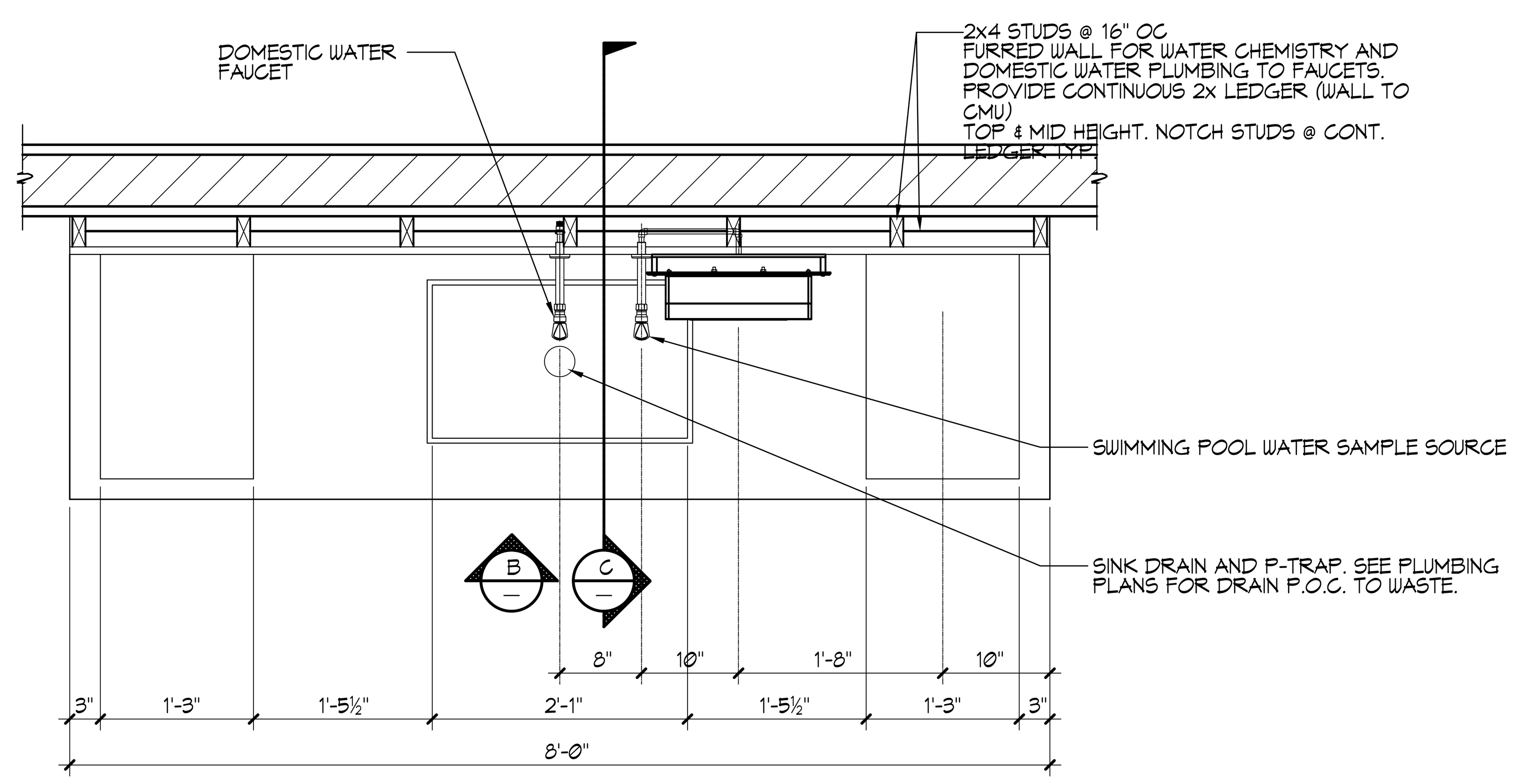

A PLAN VIEW

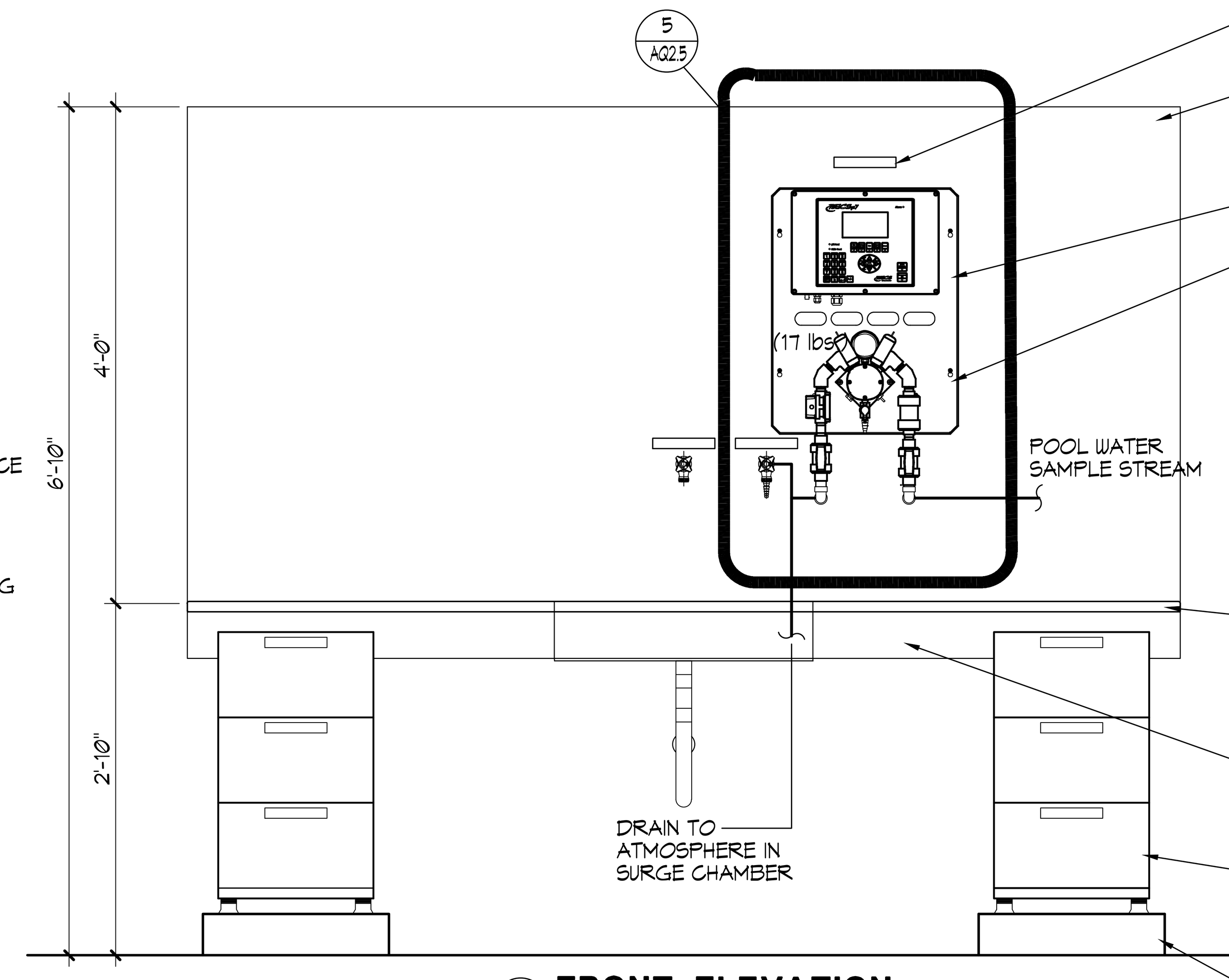

LABELS ABOVE EQUIPMENT AND FAUCETS, TYP.

8'-0" x 4'-0" x ¾" THICK HDPE FURRED BACKING WITH ALL PIPING BEHIND. PRIME AND PAINT WITH WATERPROOF COMMERCIAL GRADE, HIGH GLOSS PAINT

WATER CHEMISTRY CONTROLLER WITH BACKPANEL (17 lbs.)

SCREW TO ¾" FRP AND BLOCKING WITH 4-#16 SS SCREWS.

'BROEN BOSS' #16-403-009 WALL MOUNTED FAUCET. PROVIDE TWO (2) #19-631-003 QUICK-RELEASE COUPLING. THREE (3) TOTAL. 'BROEN BOSS', 'CHICAGO FAUCETS', OR 'ZURN'

'TOTAL LAB SOLUTIONS' #ADA-L-55CR 25"x15"x4⅞" DURATOP EPOXY LIPPED DROP-IN SINK SUPPLIED WITH POLY DRAIN OUTLET, OVERFLOW AND STOPPER ONE (1) TOTAL. 'TOTAL LAB SOLUTIONS', DURCON', OR 'KEWAUNEE'

'TOTAL LAB SOLUTIONS' 8'-0"x2'-0"x1" THICK DURATOP EPOXY FABRICATED COUNTERTOP WITH 3/16" RADIUS EDGE, COLOR BLACK. 'TOTAL LAB SOLUTIONS', DURCON', OR 'KEWAUNEE'

'TOTAL LAB SOLUTIONS' #KSR0460 KNEE SPACE RAIL. 'TOTAL LAB SOLUTIONS', DURCON', OR 'KEWAUNEE'

'TOTAL LAB SOLUTIONS' #MB3515-040 ON EA. END TWO (2) TOTAL. 'TOTAL LAB SOLUTIONS', DURCON', OR 'KEWAUNEE'

4" HOUSEKEEP PAD

B FRONT ELEVATION

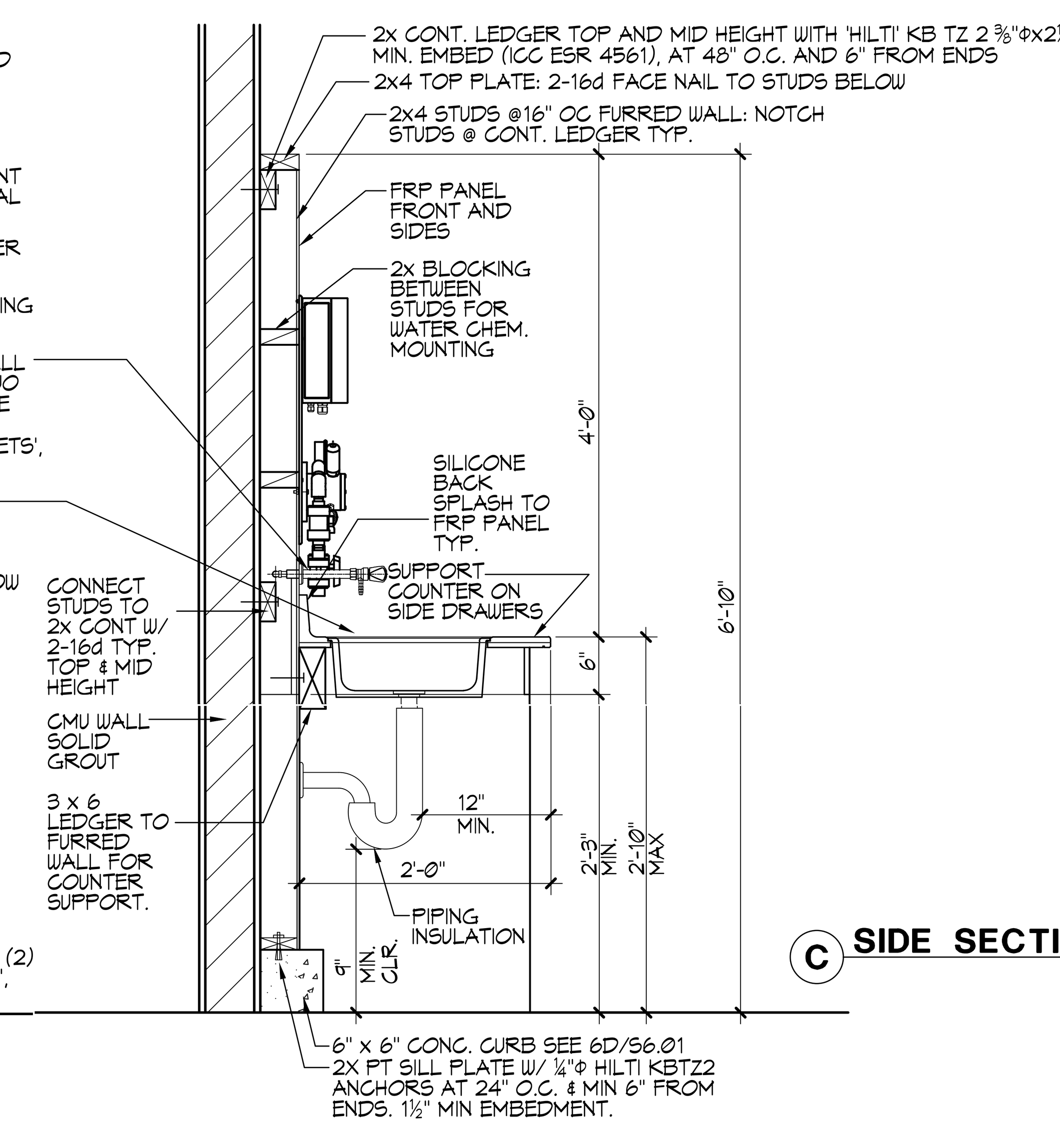

C SIDE SECTION

4 POOL OPERATOR WORKSTATION DESK DETAIL

1"=1'-0"

SYSTEM NO. C-AJ-2109

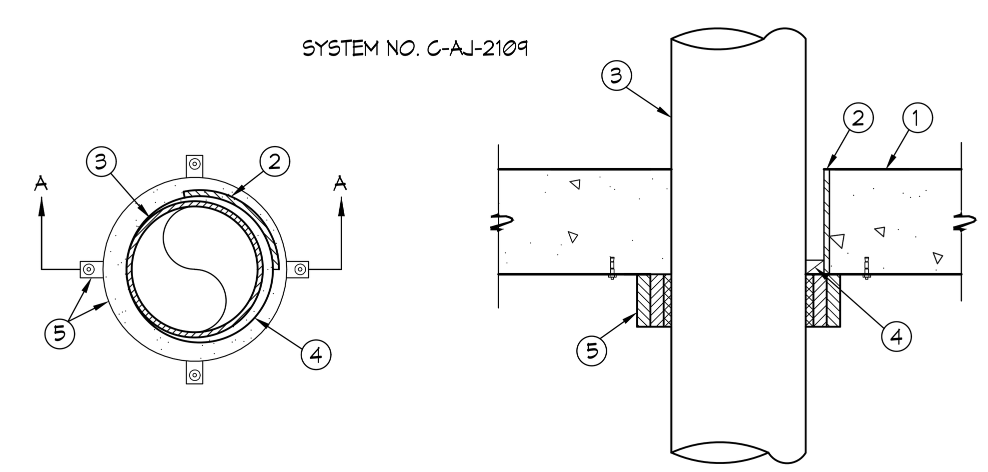

PVC PIPE	NOM. PIPE DIAM. IN	F RATING HR
PVC, CPVC	GREATER THAN 6	2
PVC, CPVC, ABS, FRPP	6 OR SMALLER	3
PVC PIPE	NOM. PIPE DIAM. IN	T RATING HR
PVC, CPVC, ABS, FRPP	1½, 2, 3,	2
PVC, CPVC, ABS, FRPP	4	3
PVC, CPVC, ABS+, FRPP	6	3
PVC, CPVC	GREATER THAN 6	0
ABS ++	6	0

+ INDICATES SOLID CORE ABS ONLY
++ INDICATES CELLULAR CORE ABS ONLY

(1) FLOOR OR WALL ASSEMBLY - MIN. 4½" THICK REINFORCED LIGHTWEIGHT OR NORMAL WEIGHT (100-150 pcf) CONCRETE. WALL MAY ALSO BE CONSTRUCTED OF ANY UL CLASSIFIED CONCRETE BLOCKS. MAX. *DIAM. OF OPENING IS 12" SEE CONCRETE BLOCKS (CAZT) CATEGORY IN THE FIRE RESISTANCE DIRECTORY FOR NAMES OF MANUFACTURES.

(2) STEELE SLEEVE - (OPTIONAL) - NOM. 12" DIAM SCHEDULE 40 (OR HEAVIER) STEEL PIPE CAST OR GROUTED INTO FLOOR OR WALL ASSEMBLY, FLUSH WITH FLOOR OR WALL SURFACES A MAX. OF 3" ABOVE THE FLOOR. IF THE STEEL SLEEVE EXTENDS ABOVE THE FLOOR, THE T RATING OF THE FIRESTOP SYSTEM IS 0 HR AND A MIN ½" ANNULAR SPACE IS REQUIRED BETWEEN THE THROUGH PENETRANT (ITEM 3) AND THE PERIPHERY OF THE OPENING. THE W RATING DOES NOT APPLY WHEN THE STEEL SLEEVE IS USED.

(3) THROUGH PENETRANTS - ONE NONMETALLIC PIPE TO BE INSTALLED EITHER CONCENTRICALLY OR ECCENTRICALLY WITHIN THE FIRESTOP SYSTEM. FOR MAX. 6" DIAM. PIPES, THE ANNULAR SPACE BETWEEN THE PIPE AND THE PERIPHERY OF OPENING SHALL BE MIN. 0" TO MAX. ½". FOR NOM. 8" AND 10" DIAM. PIPES THE ANNULAR SPACE BETWEEN THE PIPE AND THE PERIPHERY OF OPENING SHALL BE MIN. 0" TO MAX. 1¼". IF THE STEEL SLEEVE EXTENDS ABOVE THE FLOOR (ITEM 2), A MIN. ½" ANNULAR SPACE IS REQUIRED BETWEEN THE THROUGH PENETRANT (ITEM 3) AND THE PERIPHERY OF THE OPENING. PIPE TO BE RIGIDLY SUPPORTED ON BOTH SIDES OF FLOOR OR WALL ASSEMBLY. FOR SYSTEMS WITH A W RATING, THE MAX. ANNULAR SPACE IS ½". THE T RATINGS ARE DEPENDENT ON THE SIZE AND/OR TYPE OF PIPE AS SHOWN IN THE TABLE BELOW. THE FOLLOWING TYPES AND SIZES OF NONMETALLIC PIPES MAY BE USED.

A. POLYVINYL CHLORIDE PIPE (PVC) - NOM. 10" DIAM. (OR SMALLER) SCHEDULE 40 SOLID CORE OR CELLULAR CORE PVC PIPE FOR USE IN CLOSED (PROCESS OR SUPPLY) OR VENTED (DRAIN, WASTE OR VENT) PIPING SYSTEMS. FOR SYSTEMS WITH A W RATING, THE NOM. DIAM. OF PIPE SHALL NOT EXCEED 6".

B. CHLORINATED POLYVINYL CHLORIDE (CPVC) PIPE - NOM. 10" DIAM. (OR SMALLER) SDR13.5 CPVC PIPE FOR USE IN CLOSED (PROCESS OR SUPPLY) PIPING SYSTEMS. FOR SYSTEMS WITH A W RATING, THE NOM. DIAM. OF PIPE SHALL NOT EXCEED 6".

C. ACRYLONITRATE BUTADIENE STYRENE (ABS) PIPE - NOM. 6" DIAM. (OR SMALLER) SCHEDULE 40 SOLID-CORE OR CELLULAR CORE ABS PIPE FOR USE IN CLOSED (PROCESS OR SUPPLY) OR VENTED (DRAIN, WASTE OR VENT) PIPING SYSTEM.

D. FLAME RESISTANT POLYPROPYLENE (FRPP) PIPE - NOM. 6" DIAM. (OR SMALLER) SCHEDULE 40 FRPP PIPE FOR USE IN CLOSED (PROCESS OR SUPPLY) OR VENTED (DRAIN, WASTE OR VENT) PIPING SYSTEMS.

(4) FILL, VOID OR CAVITY MATERIAL* - SEALANT - MIN. ½" THICKNESS OF FILL MATERIAL APPLIED WITHIN THE ANNULUS, FLUSH WITH TOP OR BOTTOM SURFACE OF FLOOR OR BOTH SURFACES OF WALL. SEALANT IS OPTIONAL FOR PIPES HAVING A MAX. DIAM. OF 6" IN UNSLEEVED OPENINGS. FOR SYSTEMS WITH W RATING AND/OR L RATING MIN. ½" THICKNESS OF CP 601S, CFS-S SIL SL (FLOORS ONLY) SEALANT SHALL BE APPLIED WITHIN THE ANNULUS, FLUSH WITH TOP OR BOTTOM SURFACE OF FLOOR.
HILTI CONSTRUCTION CHEMICALS, DIV. OF HILTI INC. - FS-ONE MAX INTUMESCENT SEALANT, CP 601S SEALANT, CFS-S SIL GG, CFS-S SIL SL (FLOORS ONLY) SEALANT.

(4A) PACKING MATERIAL - (NOT SHOWN) - MIN. ½" THICKNESS OF 4 pcf MINERAL WOOL BATT INSULATION FIRMLY PACKED INTO ANNULAR SPACE AND RECESSED FROM THE TOP SURFACE OF FLOOR TO ACCOMODATE THE REQUIRED THICKNESS OF FILL MATERIAL. REQUIRED* ONLY WHEN CP 604 SEALANT IS USED.

(5) FIRESTOP DEVICE - FIRESTOP COLLAR - FIRESTOP COLLAR SHALL BE INSTALLED IN ACCORDANCE WITH THE ACCOMPANYING INSTRUCTIONS. COLLAR TO BE INSTALLED AND LATCHED AROUND THE PIPE AND SECURED TO UNDERSIDE OF FLOOR OR BOTH SIDES OF WALL USING THE ANCHOR HOOKS PROVIDED WITH THE COLLAR. MINIMUM TWO ANCHOR HOOKS FOR NOM. 1½" AND 2" DIAM. PIPES. MINIMUM THREE ANCHOR HOOKS REQUIRED FOR NOM. 3" AND 4" DIAM. PIPES. MINIMUM FOUR ANCHOR HOOKS REQUIRED FOR NOM. 6" DIAM. PIPES. MINIMUM 10 ANCHOR HOOKS REQUIRED FOR NOM. 8" DIAM. PIPES. MINIMUM TWELVE ANCHOR HOOKS REQUIRED FOR NOM. 10" DIAM. PIPES. THE ANCHOR HOOKS ARE TO BE SECURED WITH MIN. ¼" DIAM. BY MIN. 1¼" LONG STEEL EXPANSION BOLTS OR MIN. 0.145" DIAM. BY 1¼" LONG POWDER ACTUATED FASTENERS UTILIZING A 1 7/16" DIAM. BY 1/16" THICK STEEL WASHER. AS ALTERNATES TO THE ANCHORS SPECIFIED ABOVE, HILTI ¼" DIAM. BY 1¼" LONG KWIK-CON II + CONCRETE SCREW ANCHOR. HILTI ¼" DIAM. BY 1¾" LONG KWIK-BOLT 3 STEEL EXPANSION ANCHOR OR HILTI X-DNI 27 P8 S15 POWDER ACTUATED FLOOR PIN WITH INTEGRAL NOM. 9/16" DIAM. WASHER MAY BE USED.
HILTI CONSTRUCTION CHEMICALS, DIV. OF HILTI INC. - CP 643N 50/1.5", CP 643N 63/2", CP 643N 90/3", CP 643N 110/4', CP 643 160/6', CP 644-200/8" OR US OR CP 644-250/10" US FIRESTOP COLLAR.

* INDICATES SUCH PRODUCTS SHALL BEAR THE UL CERTIFICATION MARK FOR JURISDICTIONS EMPLOYIING THE UL.

5 PIPE PENETRATION THRU 1-HR OR 2-HR WALL DETAIL

NO SCALE

IDENTIFICATION STAMP
DIV. OF THE STATE ARCHITECT
APP: 02-119490 INC:
REVIEWED FOR
SS ☑ FLS ☑ ACS ☑
DATE: 09/13/2022

LPA
ARCHITECTURE ENGINEERING INTERIORS LANDSCAPE ARCHITECTURE PLANNING

916-287-2400 Office
916-287-2401 Fax
LPADesignStudios.com

431 I Street,
Suite 107
Sacramento, California 95814

AQUATIC DESIGN GROUP
2226 Faraday Ave. Carlsbad, CA 92008
AquaticDesignGroup.com
760.438.8400

LICENSED ARCHITECT
C35882
STATE OF CALIFORNIA

This document and all other project documents, ideas, aesthetics and designs incorporated therein are instruments of service. All project documents are copyright protected, are the property of LPA, Inc. (LPA) and cannot be lawfully used in whole or in part for any project or purpose except as set forth in the contractual agreement between LPA and its Client. The unauthorized disclosure and/or use of the project documents (including the creation of derivative works), may give rise to liability for copyright infringement, unlawful disclosure, use or misappropriation of property rights held by LPA. The unauthorized use of the project documents will give rise to the recovery of monetary losses and damages including attorney fees and costs for which the unauthorized user will be held liable.
Project documents describe the design intent of the work and are not a representation of as-built or existing conditions. LPA is not responsible for any discrepancies between the project documents and the existing conditions.

© LPA, Inc.

DAVIS SR HIGH SCHOOL
AQUATICS CENTER
315 W 14TH ST., DAVIS, CA 95616
Developed for
DAVIS JOINT UNIFIED SCHOOL DISTRICT

Revision	Date

Submittal	Date
50% DD REVIEW	06/15/2021
100% DD SUBMITTAL	07/29/2021
50% CD REVIEW	10/08/2021
100% CD DSA SUBMITTAL	10/22/2021
100% CD DSA RESUBMITTAL	02/16/2022

Job Number	1904413
Date Published	10/22/2021
Checked By	SJF
Scale	AS NOTED

DETAILS

AQ2.8

OFFICE OF STATEWIDE HEALTH PLANNING AND DEVELOPMENT
FACILITIES DEVELOPMENT DIVISION

Registered Design Professional Preparing Engineering Recommendations

Company Name: AJ ENGINEERING

Name: Jiefu Zhang — California License Number: S5270

Mailing Address: 1601 E Miraloma Avenue, Placentia, CA 92870

Telephone: (626) 379-2307 — Email: jeff@jeffzhangse.com

OSHPD Special Seismic Certification Preapproval (OSP)

☐ Special Seismic Certification is preapproved under OSP — OSP Number:

Certification Method

Testing in accordance with: ☐ ICC-ES AC156 ☒ FM 1950-16

☒ Other(s) (Please Specify): ASTM E 488-18 - AISI S100-12

*Use of criteria other than those adopted by the California Building Standards Code, 2013 (CBSC 2013) for component supports and attachments are not permitted. For distribution system, interior partition wall, and suspended ceiling seismic bracings, test criteria other than those adopted in the CBSC 2013 may be used when approved by OSHPD prior to testing.

☐ Analysis

☐ Experience Data

☐ Combination of Testing, Analysis, and/or Experience Data (Please Specify):

OSHPD Approval

Date: 10/9/2020

Name: Jeffrey Kikumoto — Title: Senior Structural Engineer

Condition of Approval (if applicable):

"Access to Safe, Quality Healthcare Environments that Meet California's Diverse and Dynamic Needs"

OSHPD

STATE OF CALIFORNIA – HEALTH AND HUMAN SERVICES AGENCY

HANGER ROD DIAMETER = 3/8"	PIPING/CONDUIT ALL-DIRECTIONAL SEISMIC SOLID BRACING SYSTEM 2"Ø PIPE/CONDUIT MAX	KIT OPTIONS S12A S1220A SH312A SH320A

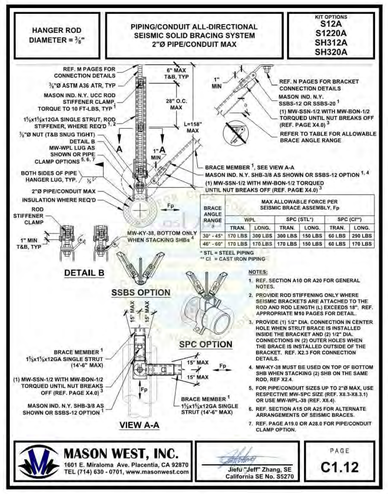

BRACE ANGLE RANGE	WPL TRAN.	WPL LONG.	SPC (STL*) TRAN.	SPC (STL*) LONG.	SPC (CI*) TRAN.	SPC (CI*) LONG.
30° - 45°	170 LBS	300 LBS	150 LBS	150 LBS	60 LBS	290 LBS
46° - 60°	170 LBS	170 LBS	170 LBS	150 LBS	60 LBS	170 LBS

MAX ALLOWABLE FORCE PER SEISMIC BRACE ASSEMBLY, Fp

* STL = STEEL PIPING
* CI = CAST IRON PIPING

NOTES:
1. REF. SECTION A10 OR A20 FOR GENERAL NOTES.
2. PROVIDE ROD STIFFENING ONLY WHERE SEISMIC BRACKETS ARE ATTACHED TO THE ROD AND ROD LENGTH (L) EXCEEDS 18". REF. APPROPRIATE M10 PAGES FOR DETAIL.
3. PROVIDE (1) 1/2" DIA. CONNECTION IN CENTER HOLE WHEN STRUT BRACE IS INSTALLED INSIDE THE BRACKET AND (2) 1/2" DIA. CONNECTIONS IN (2) OUTER HOLES WHEN THE BRACE IS INSTALLED OUTSIDE OF THE BRACKET. REF. X2.3 FOR CONNECTION DETAILS.
4. MW-KY-39 MUST BE USED ON TOP OF BOTTOM SHB WHEN STACKING (2) SHB ON THE SAME ROD, REF X2.4.
5. FOR PIPE/CONDUIT SIZES UP TO 2"Ø MAX, USE RESPECTIVE MW-SPC SIZE (REF. X8.3-8.3.1) OR USE MW-WPL-35 (REF. X8.4).
6. REF. SECTION A15 OR A25 FOR ALTERNATE ARRANGEMENTS OF SEISMIC BRACES.
7. REF. PAGE A19.0 OR A28.0 FOR PIPE/CONDUIT CLAMP OPTION.

MASON WEST, INC.
1601 E. Miraloma Ave. Placentia, CA 92870
TEL (714) 630 - 0701, www.masonwest.com

Jiefu "Jeff" Zhang, SE
California SE No. S5270

PAGE C1.12

1/2" - 2" PIPE HANGER

HANGER ROD DIAMETER = 5/8"	PIPING/CONDUIT ALL-DIRECTIONAL SEISMIC SOLID BRACING SYSTEM 5"Ø PIPE/CONDUIT MAX	KIT OPTIONS S20A S2012A SH512A SH520A

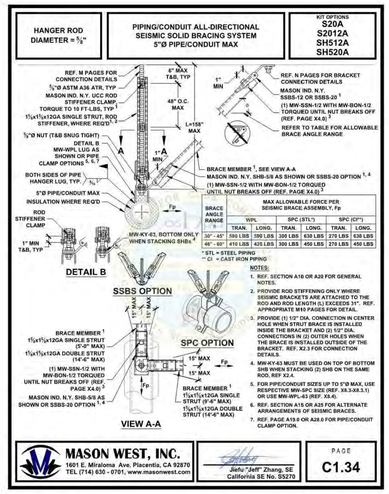

BRACE ANGLE RANGE	WPL TRAN.	WPL LONG.	SPC (STL*) TRAN.	SPC (STL*) LONG.	SPC (CI*) TRAN.	SPC (CI*) LONG.
30° - 45°	580 LBS	590 LBS	300 LBS	300 LBS	450 LBS	270 LBS
46° - 60°	410 LBS	425 LBS	300 LBS	300 LBS	450 LBS	270 LBS

MAX ALLOWABLE FORCE PER SEISMIC BRACE ASSEMBLY, Fp

* STL = STEEL PIPING
* CI = CAST IRON PIPING

NOTES:
1. REF. SECTION A10 OR A20 FOR GENERAL NOTES.
2. PROVIDE ROD STIFFENING ONLY WHERE SEISMIC BRACKETS ARE ATTACHED TO THE ROD AND ROD LENGTH (L) EXCEEDS 18". REF. APPROPRIATE M10 PAGES FOR DETAIL.
3. PROVIDE (1) 1/2" DIA. CONNECTION IN CENTER HOLE WHEN STRUT BRACE IS INSTALLED INSIDE THE BRACKET AND (2) 1/2" DIA. CONNECTIONS IN (2) OUTER HOLES WHEN THE BRACE IS INSTALLED OUTSIDE OF THE BRACKET. REF. X2.3 FOR CONNECTION DETAILS.
4. MW-KY-43 MUST BE USED ON TOP OF BOTTOM SHB WHEN STACKING (2) SHB ON THE SAME ROD, REF X2.4.
5. FOR PIPE/CONDUIT SIZES UP TO 5"Ø MAX, USE RESPECTIVE MW-SPC SIZE (REF. X8.3-X8.3.1) OR USE MW-WPL-45 (REF. X8.4).
6. REF. SECTION A15 OR A25 FOR ALTERNATE ARRANGEMENTS OF SEISMIC BRACES.
7. REF. PAGE A19.0 OR A28.0 FOR PIPE/CONDUIT CLAMP OPTION.

MASON WEST, INC.
1601 E. Miraloma Ave. Placentia, CA 92870
TEL (714) 630 - 0701, www.masonwest.com

Jiefu "Jeff" Zhang, SE
California SE No. S5270

PAGE C1.34

2 1/2" - 4" PIPE HANGER

HANGER ROD DIAMETER = 3/4"	PIPING ALL-DIRECTIONAL SEISMIC SOLID BRACING SYSTEM 12"Ø PIPE MAX	KIT OPTIONS S20A S2012A SH612A SH620A

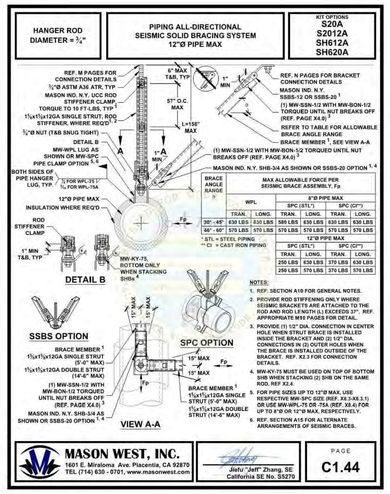

BRACE ANGLE RANGE	WPL TRAN.	WPL LONG.	SPC (STL*) TRAN.	SPC (STL*) LONG.	SPC (CI*) TRAN.	SPC (CI*) LONG.
30° - 45°	430 LBS	510 LBS	580 LBS	630 LBS	630 LBS	630 LBS
46° - 60°	570 LBS	570 LBS	570 LBS	570 LBS	570 LBS	570 LBS

MAX ALLOWABLE FORCE PER SEISMIC BRACE ASSEMBLY, Fp

* STL = STEEL PIPING
* CI = CAST IRON PIPING

NOTES:
1. REF. SECTION A10 FOR GENERAL NOTES.
2. PROVIDE ROD STIFFENING ONLY WHERE SEISMIC BRACKETS ARE ATTACHED TO THE ROD AND ROD LENGTH (L) EXCEEDS 3". REF. APPROPRIATE M10 PAGES FOR DETAIL.
3. PROVIDE (1) 1/2" DIA. CONNECTION IN CENTER HOLE WHEN STRUT BRACE IS INSTALLED INSIDE THE BRACKET AND (2) 1/2" DIA. CONNECTIONS IN (2) OUTER HOLES WHEN THE BRACE IS INSTALLED OUTSIDE OF THE BRACKET. REF. X2.3 FOR CONNECTION DETAILS.
4. MW-KY-75 MUST BE USED ON TOP OF BOTTOM SHB WHEN STACKING (2) SHB ON THE SAME ROD, REF X2.4.
5. FOR PIPE SIZES UP TO 12"Ø MAX, USE RESPECTIVE MW-SPC SIZE (REF. X8.3-X8.3.1) OR USE MW-WPL-75 OR -75A (REF. X8.4) FOR UP TO 8"Ø OR 10"Ø MAX, RESPECTIVELY.
6. REF. SECTION A15 FOR ALTERNATE ARRANGEMENTS OF SEISMIC BRACES.

MASON WEST, INC.
1601 E. Miraloma Ave. Placentia, CA 92870
TEL (714) 630 - 0701, www.masonwest.com

Jiefu "Jeff" Zhang, SE
California SE No. S5270

PAGE C1.44

6" - 12" PIPE HANGER

HANGER ROD DIAMETER = 5/8"	PIPING/CONDUIT TRANSVERSE TRAPEZE SEISMIC SOLID BRACING SYSTEM 100 PLF MAX	KIT OPTIONS TS2012T TS20T TSH512T TSH520T

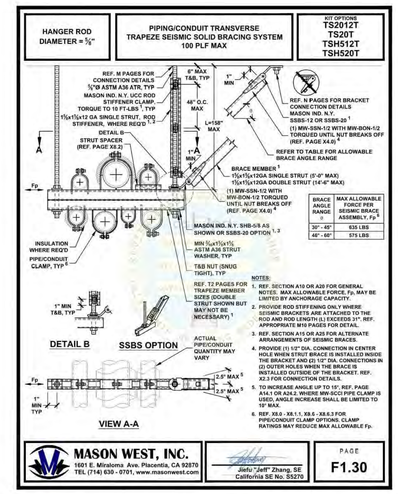

BRACE ANGLE RANGE	MAX ALLOWABLE FORCE PER SEISMIC BRACE ASSEMBLY, Fp 6
30° - 45°	635 LBS
46° - 60°	575 LBS

NOTES:
1. REF. SECTION A10 OR A20 FOR GENERAL NOTES. MAX ALLOWABLE FORCE, Fp, MAY BE LIMITED BY ANCHORAGE CAPACITY.
2. PROVIDE ROD STIFFENING ONLY WHERE SEISMIC BRACKETS ARE ATTACHED TO THE ROD AND ROD LENGTH (L) EXCEEDS 3". REF. APPROPRIATE M10 PAGES FOR DETAIL.
3. REF. SECTION A15 OR A25 FOR ALTERNATE ARRANGEMENTS OF SEISMIC BRACES.
4. PROVIDE (1) 1/2" DIA. CONNECTION IN CENTER HOLE WHEN STRUT BRACE INSTALLED INSIDE THE BRACKET AND (2) 1/2" DIA. CONNECTIONS IN (2) OUTER HOLES WHEN THE BRACE IS INSTALLED OUTSIDE OF THE BRACKET. REF. X2.3 FOR CONNECTION DETAILS.
5. TO INCREASE ANGLE UP TO 10°, REF. PAGE A14.1 OR A24.2. WHERE MW-SCC1 PIPE CLAMP IS USED, ANGLE INCREASE SHALL BE LIMITED TO 15° MAX.
6. REF. X9.0 - X9.1.1, X9.6 - X9.6.3 FOR PIPE/CONDUIT CLAMP OPTIONS. CLAMP RATINGS MAY REDUCE MAX ALLOWABLE Fp.

MASON WEST, INC.
1601 E. Miraloma Ave. Placentia, CA 92870
TEL (714) 630 - 0701, www.masonwest.com

Jiefu "Jeff" Zhang, SE
California SE No. S5270

PAGE F1.30

TRAPEZE

SEE OPM-0043-13 FOR ADDITIONAL NOTES AND DETAILS

PIPING GENERAL NOTES

1) This OSHPD Preapproval of Manufacturer's Certification (OPM) is based on the 2013 CBC. The demand (*design forces*) for use with this OPM shall be based on the 2013 CBC.

2) Per ASCE 7-10, Section 13.3.1, restraints and their anchorages must be capable of restraining horizontal, f_p, and vertical, F_{pv}, seismic accelerations as follows.

$$F_p = (0.7)\frac{0.4a_pS_{DS}W_p}{R_p/I_p}(1+2\frac{z}{h}) \quad \text{(ASD)} \quad \text{(ASCE 7-10 Eq 13.3-1)}$$

is not required to be taken greater than $(0.7)(1.6S_{DS})a_pW_p$ (ASD) (ASCE 7-10 Eq 13.3-2)
shall not be taken less than $(0.7)(0.3S_{DS})a_pW_p$ (ASD) (ASCE 7-10 Eq 13.3-3)

$$F_{pv} = (0.7)(0.2S_{DS})W_p \quad \text{(ASD)}$$

Where:
S_{DS} = short period spectral acceleration - up to 2.5g. Values of S_{DS} indicated in the general notes of the structural drawing take precedence over those calculated per ASCE 7-10, 11.4.4.
W_p = component (or tributary length of pipe) operating weight (lbs/ft).
I_p = component importance factor
= 1.5 for OSHPD 1 & 4 in accordance with 2013 CBC, Section 1616A.1.17 and for OSHPD 2 & 3, where required by ASCE 7, Section 13.1.3.
= 1.0 for OSHPD 2 & 3, when permitted by ASCE 7, Section 13.1.3.
a_p = component amplification factor (Ref. ASCE 7-10, Table 13.6-1)
= 1.0 for gravity waste, vent and drain cast iron plumbing pipe.
= 2.5 for all other piping and tubing.
R_p = component response modification factor (Ref. ASCE 7-10, Table 13.6-1)
= 2.5 for gravity, waste, vent and drain cast iron plumbing pipe.
= 3.0 for piping and tubing constructed of low-deformability materials such as cast iron, glass, and nonductile plastics.
= 4.5 for piping and tubing not in accordance with ASME B31, including in-line components, constructed of high- or limited-deformability materials, with joints made by threading, bonding, compression couplings, or grooved couplings.
= 6.0 for piping in accordance with ASME B31, including in-line components, constructed of high- or limited-deformability materials, with joints made by threading, bonding, compression couplings, or grooved couplings.
= 9.0 for piping and tubing not in accordance with ASME B31, including in-line components, constructed of high-deformability materials, with joints made by welding or brazing.
= 12.0 for piping in accordance with ASME B31, including in-line components with joints made by welding or brazing.
NOTE: Per ASCE 7-10, Section 13.4.1, do not use an Rp factor greater than 6.0 when calculating Fp and Fpv for design of the attachment.
z = height in structure of point of connection of component with respect to base (ft).
h = average roof height of structure with respect to base (ft).

3) For systems anchored to concrete only, the anchorage to concrete overstrength factor, Ω₀, must be applied. Sections M & N provide alternate allowable load tables with and without Ω₀ applied. For cases where Ω₀ is applicable, use the appropriate tables in Sections M & N so it is not necessary to apply this factor when calculating F_p and F_{pv}. Ω₀ is not applicable if a yielding steel element is considered in the load path. Refer to ACI 318-11 Appendix D, Section D.3.3.4.3 or ACI 318-14 Chapter 17, Section 17.2.3.4.3 for a list of qualifying conditions. The Registered Design Professional (RDP) shall use the allowable vertical loads under overstrength factor Ω₀ = 2.0 unless the vertical support complies with one of the qualifying conditions.

MASON WEST, INC.
1601 E. Miraloma Ave. Placentia, CA 92870
TEL (714) 630 - 0701, www.masonwest.com

Jiefu "Jeff" Zhang, SE
California SE No. S5270

PAGE A10.0

ALTERNATE ARRANGEMENT OF SEISMIC BRACES FOR INDIVIDUALLY SUSPENDED STEEL PIPING

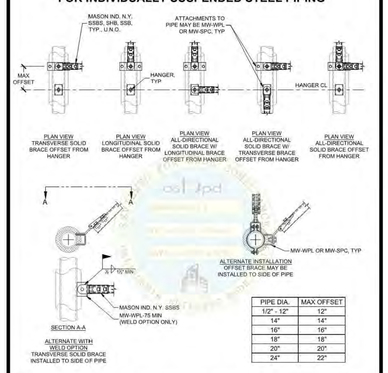

PIPE DIA.	MAX OFFSET
1/2" - 12"	12"
14"	14"
16"	16"
18"	18"
20"	20"
24"	22"

NOTES:
1) REFER TO APPROPRIATE DETAIL C PAGES FOR DIMENSIONS AND NOTATIONS NOT SHOWN.
2) MAX OFFSETS ARE BASED ON STEEL PIPE CONFORMING TO ASTM SPECIFICATION A53, TYPE E, GRADE B WITH MINIMUM Fy = 35 ksi AND S_u = 14.6 ksi AT MAXIMUM OPERATING PRESSURE AND TEMPERATURE OF 400 psi and 650°F, RESPECTIVELY.

MASON WEST, INC.
1601 E. Miraloma Ave. Placentia, CA 92870
TEL (714) 630 - 0701, www.masonwest.com

Jiefu "Jeff" Zhang, SE
California SE No. S5270

PAGE A15.2

ATTACHMENT OPTIONS FOR PIPING ON TRAPEZE MEMBERS FOR TRANSVERSE BRACING SYSTEMS

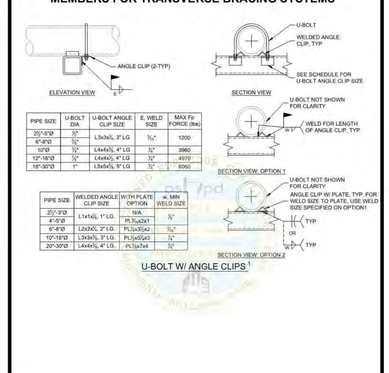

PIPE SIZE	U-BOLT DIA.	U-BOLT ANGLE CLIP SIZE	E, WELD SIZE	MAX Fp FORCE (lbs)
2½"-5"Ø	½"	L3x3x¼, 3" LG	¼"	1200
6"-8"Ø	½"			
10"Ø	½"	L4x4x¼, 4" LG	¼"	3560
12"-16"Ø	½"	L4x4x¼, 4" LG	¼"	4970
18"-30"Ø	1"	L5x5x½, 5" LG	¼"	8060

PIPE SIZE	WELDED ANGLE CLIP SIZE	W/TH PLATE OPTION	w. MIN WELD SIZE
2½"-3"Ø	L1x1x¼, 1" LG	N/A	
4"-5"Ø		PL3⅛x3x¼ 1	¼"
6"-8"Ø	L2x2x¼, 2" LG	PL3⅛x3x¼ 2	¼"
10"-16"Ø	L3x3x¼, 3" LG	PL3⅛x3x¼ 2	¼"
20"-30"Ø	L4x4x¼, 4" LG	PL3⅛x7x4	¼"

NOTES:
1) U-BOLT W/ ANGLE CLIPS OPTION MAY ONLY BE INSTALLED TO TOP OF TRAPEZE.
2) ASTM A36, Fy = 36 KSI (STEEL ANGLES, PLATES, AND U-BOLTS).

MASON WEST, INC.
1601 E. Miraloma Ave. Placentia, CA 92870
TEL (714) 630 - 0701, www.masonwest.com

Jiefu "Jeff" Zhang, SE
California SE No. S5270

PAGE A16.3

SEISMIC SOLID BRACING PIPE CLAMP OPTION FOR INDIVIDUALLY SUSPENDED PIPING

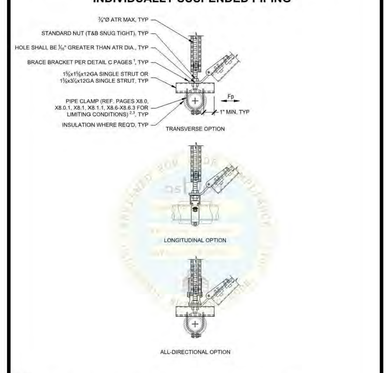

NOTES:
1) REFER TO APPROPRIATE DETAIL C PAGES FOR CALL-OUTS, DIMENSIONS AND NOTATIONS NOT SHOWN.
2) CLAMP RATING MAY LOWER MAX ALLOWABLE Fp.
3) MASON WEST TYPE MW-SCC1 PIPE CLAMPS MAY ONLY BE USED AT TRANSVERSE LOCATIONS.

MASON WEST, INC.
1601 E. Miraloma Ave. Placentia, CA 92870
TEL (714) 630 - 0701, www.masonwest.com

Jiefu "Jeff" Zhang, SE
California SE No. S5270

PAGE A19.0

SEISMIC SOLID BRACING PIPE CLAMP OPTION FOR INDIVIDUALLY SUSPENDED CONDUIT

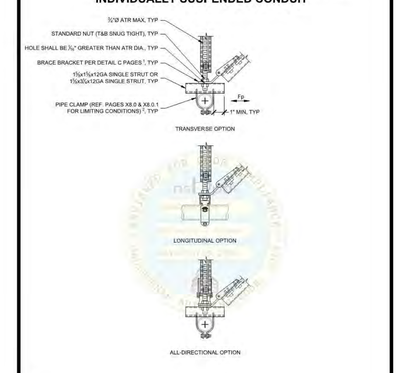

NOTES:
1) REFER TO APPROPRIATE DETAIL C PAGES FOR CALL-OUTS, DIMENSIONS AND NOTATIONS NOT SHOWN.
2) CLAMP RATING MAY LOWER MAX ALLOWABLE Fp.

MASON WEST, INC.
1601 E. Miraloma Ave. Placentia, CA 92870
TEL (714) 630 - 0701, www.masonwest.com

Jiefu "Jeff" Zhang, SE
California SE No. S5270

PAGE A28.0

HANGER INSTALLATION DETAILS WITH ROD STIFFENER FOR STEEL OR WOOD ATTACHMENTS

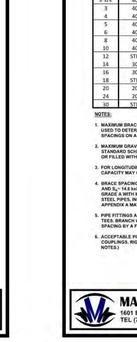

MASON WEST, INC.
1601 E. Miraloma Ave. Placentia, CA 92870
TEL (714) 630 - 0701, www.masonwest.com

Jiefu "Jeff" Zhang, SE
California SE No. S5270

PAGE M10.12

PIPE — STEEL PIPE (STANDARD SCHEDULE) WATER FILLED WITH INSULATION MAXIMUM SEISMIC BRACE SPACINGS — VERTICAL FORCE Fpv = 0.375g (ASD)

NPS	PIPE SCHEDULE	MAX WEIGHT PER FOOT (LBS/FT)	MAX GRAVITY SUPPORT SPACING (FT)	MAX TRANSVERSE BRACE SPACING BASED ON PIPE SIZE AND g FORCE (FT)				
				g FORCE				
				0.25	0.375	0.5	0.625	0.75	0.875	1
1 1/4	40	9.8	7	35	32	30	28	26	25	24
1 1/2	40	4.5	9	38	35	32	30	29	27	26
2	40	6.2	10	43	39	36	34	32	31	30
2 1/2	40	9.1	11	48	43	40	38	36	35	34
3	40	12.1	12	53	48	44	42	40	39	37
4	40	18.3	14	59	53	50	47	45	43	42
5	40	26.6	15	65	59	54	52	49	46	43
6	40	34.8	17	71	64	59	56	52	48	45
8	40	55.1	19	80	72	67	60	55	51	47
10	40	80.2	20	89	80	72	64	58	54	51
12	STD	109	20	94	81	70	63	57	53	50
14	30	122	20	75	63	53	47	43	40	37
16	30	150	20	73	60	52	46	42	39	36
18	STD	190	20	68	56	48	43	39	37	34
20	20	214	20	69	56	49	43	40	37	34
24	20	289	20	54	43	36	31	27	24	22
30	STD	422	20	58	47	41	37	34	31	29

NOTES:
1. MAXIMUM BRACE SPACING IS BASED ON ASME B31E DESIGN BY ANALYSIS EQUATION. PIPE SIZE, MATERIALS, PRESSURES, ETC. NOT USED TO DETERMINE THESE TABLES MAY USE ASME B31E DESIGN BY ANALYSIS TO DETERMINE THE MAXIMUM SEISMIC BRACE SPACINGS ON A PROJECT BY PROJECT BASIS.
2. MAXIMUM GRAVITY SUPPORT SPACING IS BASED ON MSS SP-58 TABLE 4 LIMITED TO 20 FEET. PIPE HEIGHTS USED ARE BASED ON STANDARD SCHEDULE STEEL PIPES (40S) INCLUDING WATER AND INSULATION (REFER TO APPENDIX), PIPES WITH THICKER WALLS AND / OR FILLED WITH VAPOR OR GAS MAY USE SPACINGS AS TABULATED.
3. FOR LONGITUDINAL AND ALL-DIRECTIONAL BRACE SPACING, TRIPLE THE VALUES IN THE ABOVE TABLE. BRACE AND / OR CONNECTION CAPACITY MAY GOVERN MAXIMUM SPACING IN SOME CASES.
4. BRACE SPACINGS ARE BASED ON STEEL PIPE CONFORMING TO ASTM SPECIFICATION A53, TYPE E, GRADE B WITH MINIMUM Fy = 35 ksi AND S_u = 14.6 ksi AT MAXIMUM OPERATING PRESSURE AND TEMPERATURE OF 400psi AND 650°F, RESPECTIVELY. FOR ASTM A53, TYPE E, GRADE A WITH MINIM

MASON IND. N.Y. SHB - SEISMIC HOOK BRACE

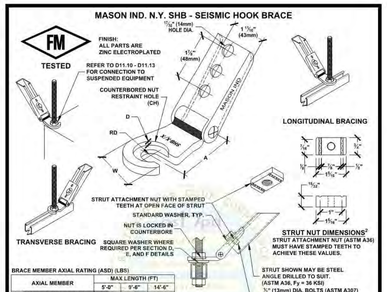

BRACE MEMBER AXIAL RATING (ASD) (LBS)

AXIAL MEMBER	MAX LENGTH (FT)		
	5'-0"	9'-0"	14'-0"
1½x1½x12GA SINGLE STRUT	1500	850	475
1½x1½x12GA DOUBLE STRUT	3950	2200	1200
L3x3x¼	5790	1973	920
L3x3x⅛	14400	6200	3008

NOTE: STRUT MUST BE ASTM A1011SS GR 33 COLD ROLLED MILD STEEL, SLOTTED, PUNCHED OR SOLID (REF X7.2 & X7.1). DOUBLE STRUT MUST BE MINIMUM 2'-0" LONG. ANGLE MUST BE A36 STEEL.

TYPE SHB DIMENSIONS & RATINGS (ASD)

SIZE	ROD DIA. (RD)		COUNTERBORED HOLE DIA. (CH) x DEPTH (D)		W		A		LATERAL LOAD RATINGS[3]					
									30° - 45°[1]			45° - 60°[1]		
	(in)	(mm)	(in)	(mm)	(in)	(mm)	(in)	(mm)	lbs	kN	kg	lbs	kN	kg
SHB-3/8	⅜	10	⅞ x ⅜	19 x 24	2	51	2	51	1420	6.3	644	1000	4.5	454
SHB-1/2	½	13	1 x ½	25 x 4	2	51	2	51	1710	7.6	775	1280	5.7	581
SHB-5/8	⅝	16	1⅜ x ⅝	30 x 4	2½	54	1⅝[4]	49	1520	6.8	690	1100	4.9	499
SHB-3/4	¾	19	1⅜ x ¾	37 x 4	2½	57	1⅝	48	1660	7.4	753	1040	4.6	471

1. BRACE ANGLE MEASURED FROM HORIZONTAL.
2. STRUT NUT TO BE USED AS A STANDARD STUD (M8-8SN) WITH BREAK-OFF NUT (M8-8GN) OPTION TO STRUT NUT AND HEX BOLT.
3. ATTACHMENT TO STEEL OR OTHER SUBSTRATES (e.g., CONCRETE, WOOD) MAY GOVERN THE DESIGN OF THE OVERALL BRACE ASSEMBLY AND SHALL BE EVALUATED ON A PROJECT BY PROJECT BASIS PER ATTACHMENT LOAD RATINGS IN SECTION N.

MASON WEST, INC.
1601 E. Miraloma Ave. Placentia, CA 92870
TEL (714) 630 - 0701, www.masonwest.com

Jiefu "Jeff" Zhang, SE
California SE No. S5270

PAGE X2.1

MASON IND. N.Y. SSB - SEISMIC SOLID BRACE

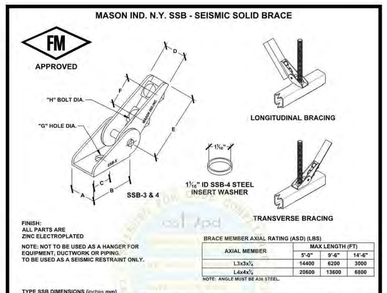

FINISH:
ALL PARTS ARE
ZINC ELECTROPLATED

NOTE: NOT TO BE USED AS A HANGER FOR EQUIPMENT, DUCTWORK OR PIPING. TO BE USED AS A SEISMIC RESTRAINT ONLY.

BRACE MEMBER AXIAL RATING (ASD) (LBS)

AXIAL MEMBER	MAX LENGTH (FT)		
	5'-0"	9'-0"	14'-0"
L3x3x¼	14400	6200	3000
L4x4x¼	20800	13000	6800

NOTE: ANGLE MUST BE A36 STEEL.

TYPE SSB DIMENSIONS (inches mm)

SIZE	A		B		C		D		E		F		G		H	
SSB-3	2	51	3½	89	1⅝	44	1 1/16	27	4¾	121	2	51	15/16	21	½	13
SSB-4	3½	79	5	127	2½	64	1 9/16	40	5¾	146	2½	57	1 7/16	33	½	25

TYPE SSB ASSEMBLY RATINGS (ASD)

SIZE[2]	ROD/BOLT SIZE		LATERAL LOAD RATINGS[1]								
			30° - 45°[3]			45° - 60°[3]					
	(in)	(mm)	lbs	kN	kg	lbs	kN	kg			
SSB-3	⅜	19	5640	25.0	2557	3360	14.9	1523			
SSB-4	1	25	6410	28.5	2906	4280	19.0	1940			
SSB-4	1 1/4	32	6410	28.5	2906	4280	19.0	1940			

1. BRACE ANGLE MEASURED FROM HORIZONTAL.
2. ATTACHMENT TO STEEL OR OTHER SUBSTRATES (e.g., CONCRETE, WOOD) MAY GOVERN THE DESIGN OF THE OVERALL BRACE ASSEMBLY AND SHALL BE EVALUATED ON A PROJECT BY PROJECT BASIS PER ATTACHMENT LOAD RATINGS IN SECTION N.
3. WHEN USING SSB-4 WITH 1" RODS/BOLT, 1¼" ID RING IS REQUIRED.

MASON WEST, INC.
1601 E. Miraloma Ave. Placentia, CA 92870
TEL (714) 630 - 0701, www.masonwest.com

Jiefu "Jeff" Zhang, SE
California SE No. S5270

PAGE X2.2

SSBS / SHB ALTERNATE CONNECTIONS

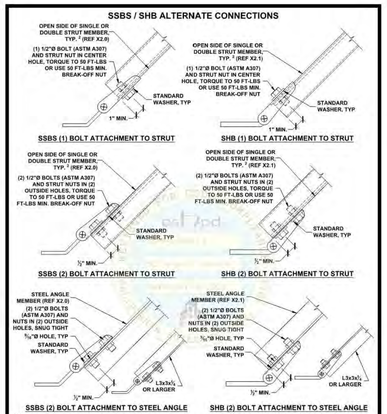

NOTES:
1. MW-SSN AND MW-BON MAY BE SUBSTITUTED FOR ½"Ø BOLT AND STRUT NUT DETAILED ABOVE. (REF PAGE X4.8)
2. FOR INSTALLATION TO CLOSED SIDE OF STRUT MEMBER, USE ½"Ø BOLT(S) (ASTM A307) AND NUTS.

MASON WEST, INC.
1601 E. Miraloma Ave. Placentia, CA 92870
TEL (714) 630 - 0701, www.masonwest.com

Jiefu "Jeff" Zhang, SE
California SE No. S5270

PAGE X2.3

MW-KY SHB KEY

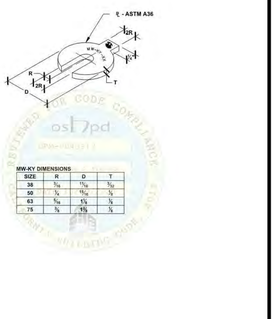

MW-KY DIMENSIONS

SIZE	R	D	T
38	15/16	15/16	3/16
50	½	11/16	⅛
63	⅜	½	⅛
75	⅜	11/16	⅛

MASON WEST, INC.
1601 E. Miraloma Ave. Placentia, CA 92870
TEL (714) 630 - 0701, www.masonwest.com

Jiefu "Jeff" Zhang, SE
California SE No. S5270

PAGE X2.4

MASON IND. N.Y. UCC - SEISMIC ROD CLAMPS FOR STRUT CHANNELS

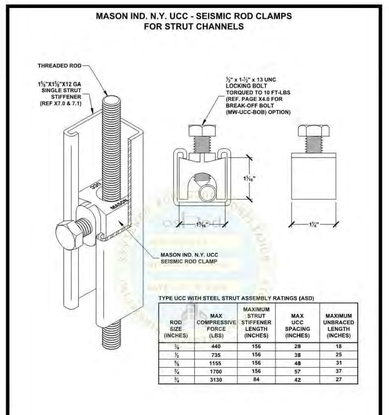

TYPE UCC WITH STEEL STRUT ASSEMBLY RATINGS (ASD)

ROD SIZE (INCHES)	MAX COMPRESSIVE FORCE (LBS)	MAXIMUM STRUT STIFFENER LENGTH (INCHES)	MAX UCC SPACING (INCHES)	MAXIMUM UNBRACED LENGTH (INCHES)
⅛	440	156	28	18
¼	735	156	38	25
⅜	1155	156	48	31
½	1750	156	57	37
¾	3130	84	42	27

MASON WEST, INC.
1601 E. Miraloma Ave. Placentia, CA 92870
TEL (714) 630 - 0701, www.masonwest.com

Jiefu "Jeff" Zhang, SE
California SE No. S5270

PAGE X3.0

MASON IND. N.Y. SRC - SEISMIC ROD CLAMPS FOR STEEL ANGLES

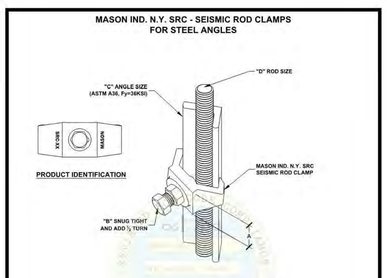

MASON IND. N.Y. SRC - SEISMIC ROD CLAMP FOR STEEL ANGLE STIFFENER

SIZE	DIMENSIONS - INCHES (MM)				RATINGS (ASD)			
	A	B	C	D	MAXIMUM COMPRESSION FORCE (LBS)	MAXIMUM LENGTH (INCHES)	MAXIMUM SRC SPACING (INCHES)	MAXIMUM UNBRACED LENGTH (INCHES)
SRC - 1½	1⅝ (40)	½ x 2 LONG (10 x 51 LONG)	1½x1½x¼ (38 x 38 x 6)	¼	2339	132	66	43
				1	2945	120	77	50
SRC - 2	1½ (44)	½ x 3 LONG (10 x 76 LONG)	2x2x¼ (51 x 51 x 6)	1	3990	132	66	43
				1½	4686	129	95	62
				1½	6458	84	71	46

MASON WEST, INC.
1601 E. Miraloma Ave. Placentia, CA 92870
TEL (714) 630 - 0701, www.masonwest.com

Jiefu "Jeff" Zhang, SE
California SE No. S5270

PAGE X3.1

BREAK-OFF BOLT AND NUT HARDWARE

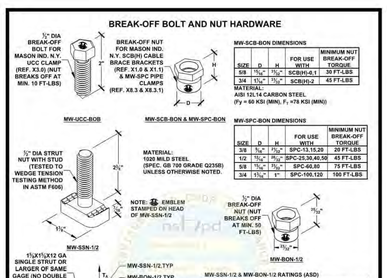

MW-SCB-BON DIMENSIONS

SIZE	D	H	FOR USE WITH	MINIMUM NUT BREAK-OFF TORQUE
5/8	15/16"	15/16"	SCB(H)-6.1	30 FT-LBS
3/4	1 1/16"	15/16"	SCB(H)-2	45 FT-LBS

MATERIAL:
AISI 12L14 CARBON STEEL
(Fy = 60 KSI (MIN), Fu =78 KSI (MIN))

MW-SPC-BON DIMENSIONS

SIZE	D	H	FOR USE WITH	MINIMUM NUT BREAK-OFF TORQUE
3/8	9/16"	15/16"	SPC-13,15,20	20 FT-LBS
1/2	15/16"	15/16"	SPC-25,30,40,50	45 FT-LBS
5/8	15/16"	15/16"	SPC-60,80	75 FT-LBS
3/4	1 1/16"	1"	SPC-100,120	100 FT-LBS

MW-SSN-1/2 & MW-BON-1/2 RATINGS (ASD)

TENSION, (T_A)	SHEAR, (V_{AP})	SHEAR, (V_{AS})
2020 LBS	1630 LBS	810 LBS

NOTE:
1. RATING ARE FOR (1) ATTACHMENT ONLY. CONDITIONS WITH MULTIPLE ATTACHMENTS WERE NOT TESTED.
2. COMBINED TENSION AND SHEAR LOADS SHALL BE CHECKED FOR UNITY, $T/T_A + V_{AP}/V_{AP} \leq 1.0$
3. ONLY (1) MW-SSN-1/2 SHALL OCCUR WITHIN SPAN S AND ANY ADJACENT MW-SSN-1/2 SHALL BE A MINIMUM OF 4" AWAY.
4. FOR SHEAR LOADS APPLIED AT AN ANGLE UP TO 45°, THE 3" MIN. EDGE DISTANCE IS REQUIRED.

MASON WEST, INC.
1601 E. Miraloma Ave. Placentia, CA 92870
TEL (714) 630 - 0701, www.masonwest.com

Jiefu "Jeff" Zhang, SE
California SE No. S5270

PAGE X4.0

STRUT CHANNEL

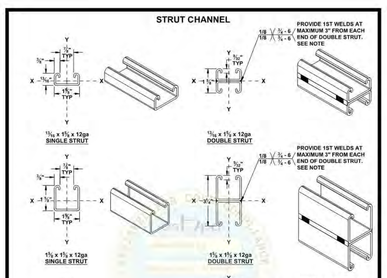

MASON WEST, INC.
1601 E. Miraloma Ave. Placentia, CA 92870
TEL (714) 630 - 0701, www.masonwest.com

Jiefu "Jeff" Zhang, SE
California SE No. S5270

PAGE X7.0

STRUT CHANNEL SECTION PROPERTIES

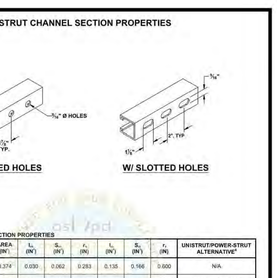

MINIMUM STRUT CHANNEL SECTION PROPERTIES

STRUT MEMBER	WEIGHT (LBS/FT)	AREA (IN^2)	I_x (IN^4)	S_x (IN^3)	r_x (IN)	I_y (IN^4)	S_y (IN^3)	r_y (IN)	UNISTRUT/POWER-STRUT ALTERNATIVE[4]
1⅝"x1⅝"x12GA SINGLE STRUT	1.37	0.374	0.030	0.062	0.283	0.135	0.166	0.600	N/A
1⅝"x1⅝"x12GA DOUBLE STRUT	2.70	0.746	0.140	0.184	0.432	0.270	0.332	0.600	P4521/PS 520 2T3
1⅝"x1⅝"x12GA SINGLE STRUT	1.89	0.544	0.190	0.195	0.575	0.233	0.287	0.655	N/A
1⅝"x1⅝"x12GA DOUBLE STRUT	3.78	1.088	0.895	0.570	0.908	0.466	0.574	0.655	P1001/PS 200 2T3
1⅝"x3⅛"x12GA SINGLE STRUT	3.05	0.844	1.073	0.609	1.102	0.429	0.529	0.696	N/A
1⅝"x3⅛"x12GA DOUBLE STRUT	6.10	1.788	6.064	1.896	1.852	0.859	1.057	0.696	PS001/PS 100 2 T3

NOTES
1. STRUT MATERIAL TO BE MANUFACTURED OF COLD ROLLED MILD STEEL MEETING ASTM-A1011SS GRADE 33.
2. 9/16" STRUT MAY BE SUBSTITUTED WITH ½" STRUT OF SAME 1⅝" HEIGHT AND 12 ga THICKNESS MATERIAL.
3. ALL STRUT CHANNEL DIMENSIONS AND PROPERTIES SHOWN ARE NOT VALID AT SLOTTED HOLES IN STRUT CHANNEL. ADDITIONAL LOADS SHALL BE CALCULATED AT SLOTTED HOLES.
4. UNISTRUT P4521, P1001, AND P3001 OR POWER-STRUT PS 520 2T3, PS 200 2T3, AND PS 100 2T3 DOUBLE STRUT MEMBERS WITH FACTORY SPOT WELDING ARE ACCEPTABLE IN LIEU OF STITCH WELDING OF OUTER STRUT WALLS. CONTRACTOR MAY USE OTHER MANUFACTURERS IF SPOT WELDING TESTING IS PROVIDED, SUBJECT TO REVIEW AND APPROVAL BY MASON WEST AND THE AUTHORITY HAVING JURISDICTION.

MASON WEST, INC.
1601 E. Miraloma Ave. Placentia, CA 92870
TEL (714) 630 - 0701, www.masonwest.com

Jiefu "Jeff" Zhang, SE
California SE No. S5270

PAGE X7.1

MASON WEST MW-SSC AND MW-SSCE

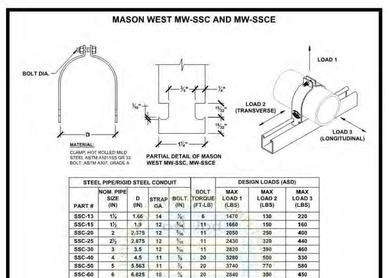

STEEL PIPE/RIGID STEEL CONDUIT						DESIGN LOADS (ASD)		
PART #	NOM. PIPE SIZE (IN)	D (IN)	STRAP GA.	BOLT (IN)	BOLT TORQUE (FT-LB)	MAX LOAD 1 (LBS)	MAX LOAD 2 (LBS)	MAX LOAD 3 (LBS)
SSC-13	1½	1.66	14	⅜	6	1470	130	220
SSC-15	1½	1.9	12	3/16	11	1660	150	160
SSC-20	2	2.375	12	3/16	11	2050	250	400
SSC-25	2½	2.875	12	3/16	11	2430	320	440
SSC-30	3	3.5	12	3/16	11	2820	390	460
SSC-40	4	4.5	11	⅜	20	3260	550	330
SSC-50	5	5.563	11	⅜	20	3740	770	580
SSC-60	6	6.625	10	⅜	20	2840	350	450
SSC-80	8	8.625	10	⅜	20	3840	350	440
SSC-100	10	10.75	10	⅜	20	2840	340	400
SSC-120	12	12.75	10	⅜	20	2840	330	410

EMT AND IMC CONDUIT						DESIGN LOADS (ASD)		
PART #	NOM. PIPE SIZE (IN)	D (IN)	STRAP GA.	BOLT (IN)	BOLT TORQUE (FT-LB)	MAX LOAD 1 (LBS)	MAX LOAD 2 (LBS)	MAX LOAD 3 (LBS)
SSCE-13	1½	1.51	14	⅜	6	2000	140	210
SSCE-15	1½	1.74	12	⅜	11	2240	160	290
SSCE-20	2	2.197	12	3/16	11	2730	240	350
SSC-25	2½	2.875	12	3/16	11	2880	240	390
SSC-30	3	3.5	12	3/16	11	3020	230	380
SSC-40	4	4.5	11	⅜	20	3150	280	430

1 - STEEL PIPE SHALL BE MINIMUM SCHEDULE 10. RIGID STEEL CONDUIT SHALL BE MANUFACTURED TO UL4 AND ANSI C80.1.
2 - STEEL PIPE/CONDUIT SUSPENDED FROM STRUT, REFER TO PAGE X8.8.1 FOR COMBINED MAX VERTICAL AND LATERAL LOADS.
3 - LOAD 2 AND LOAD 3 MAY BE ROTATED UP TO 15° MAX FROM THE REFERENCED LOAD DIRECTION IN PLAN.

MASON WEST, INC.
1601 E. Miraloma Ave. Placentia, CA 92870
TEL (714) 630 - 0701, www.masonwest.com

Jiefu "Jeff" Zhang, SE
California SE No. S5270

PAGE X8.0

SEE OPM-0043-13 FOR ADDITIONAL NOTES AND DETAILS

MASON WEST MW-SSC AND MW-SSCE

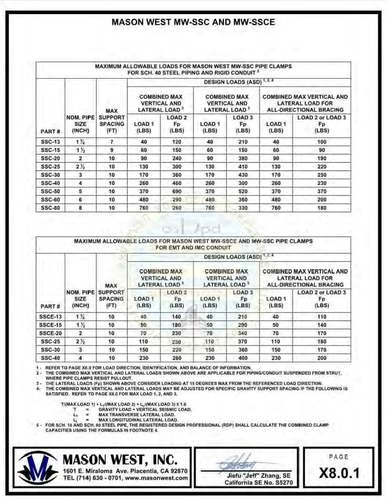

MAXIMUM ALLOWABLE LOADS FOR MASON WEST MW-SSC PIPE CLAMPS FOR SCH. 40 STEEL PIPING AND RIGID CONDUIT [6]

PART #	NOM. PIPE SIZE (INCH)	MAX SUPPORT SPACING (FT)	DESIGN LOADS (ASD) [1, 2, 4] COMBINED MAX VERTICAL AND LATERAL LOAD [3] LOAD 1 (LBS)	LOAD 2 Fp (LBS)	COMBINED MAX VERTICAL AND LATERAL LOAD [3] LOAD 1 (LBS)	LOAD 3 Fp (LBS)	COMBINED MAX VERTICAL AND LATERAL LOAD FOR ALL-DIRECTIONAL BRACING LOAD 1 (LBS)	LOAD 2 or LOAD 3 Fp (LBS)
SSC-13	1½	7	40	120	40	210	40	100
SSC-15	1½	9	40	150	40	150	40	90
SSC-20	2	10	90	240	90	380	90	190
SSC-25	2½	10	130	300	130	410	130	220
SSC-30	3	10	170	360	170	430	170	250
SSC-40	4	10	260	460	260	300	260	230
SSC-50	5	10	370	690	370	520	370	370
SSC-60	6	10	480	290	480	360	480	200
SSC-80	8	10	760	260	760	330	760	180

MAXIMUM ALLOWABLE LOADS FOR MASON WEST MW-SSCE AND MW-SSC PIPE CLAMPS FOR EMT AND IMC CONDUIT

PART #	NOM. PIPE SIZE (INCH)	MAX SUPPORT SPACING (FT)	DESIGN LOADS (ASD) [1, 2, 4] COMBINED MAX VERTICAL AND LATERAL LOAD [3] LOAD 1 (LBS)	LOAD 2 Fp (LBS)	COMBINED MAX VERTICAL AND LATERAL LOAD [3] LOAD 1 (LBS)	LOAD 3 Fp (LBS)	COMBINED MAX VERTICAL AND LATERAL LOAD FOR ALL-DIRECTIONAL BRACING LOAD 1 (LBS)	LOAD 2 or LOAD 3 Fp (LBS)
SSCE-13	1½	10	40	140	40	210	40	110
SSCE-15	1½	10	50	180	50	290	50	140
SSCE-20	2	10	70	230	70	340	70	170
SSC-25	2½	10	110	250	110	370	110	190
SSC-30	3	10	150	220	150	360	150	170
SSC-40	4	10	230	260	230	400	230	200

1 - REFER TO PAGE X8.8 FOR LOAD DIRECTION, IDENTIFICATION, AND BALANCE OF INFORMATION.
2 - THE COMBINED MAX VERTICAL AND LATERAL LOADS SHOWN ABOVE ARE APPLICABLE FOR PIPING/CONDUIT SUSPENDED FROM STRUT, WHERE PIPE CLAMPS REBOUT PULLOUT.
3 - THE LATERAL LOADS (Fp) SHOWN ABOVE CONSIDER LOADING AT 15 DEGREES MAX FROM THE REFERENCED LOAD DIRECTION.
4 - THE COMBINED MAX VERTICAL AND LATERAL LOADS MAY BE ADJUSTED FOR SPECIFIC GRAVITY SUPPORT SPACING IF THE FOLLOWING IS SATISFIED. REFER TO PAGE X8.1 FOR MAX LOAD 1, 2, AND 3.

$$T_{(MAX\ LOAD\ 1)} + L_{(MAX\ LOAD\ 2)} + L_{(MAX\ LOAD\ 3)} \leq 1$$

$T_{(MAX\ LOAD\ 1)}$ = MAX VERTICAL LOAD LOAD 1.
L_2 = MAX TRANSVERSE LATERAL LOAD.
L_3 = MAX LONGITUDINAL LATERAL LOAD.

5 - FOR SCH. 10 AND SCH. 80 STEEL PIPE, THE REGISTERED DESIGN PROFESSIONAL (RDP) SHALL CALCULATE THE COMBINED CLAMP CAPACITIES USING THE FORMULAS IN FOOTNOTE 4.

MASON WEST, INC.
1601 E. Miraloma Ave. Placentia, CA 92870
TEL (714) 630 - 0701, www.masonwest.com

Jiefu "Jeff" Zhang, SE
California SE No. S5270

PAGE X8.0.1

MASON WEST MW-SCC

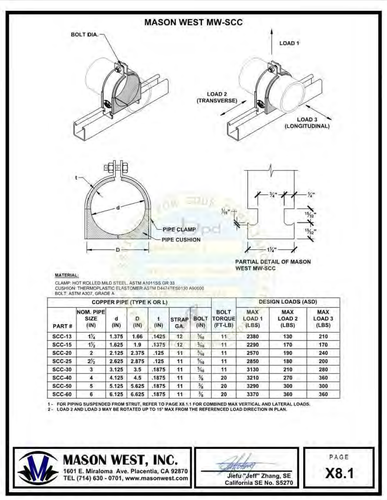

PART #	NOM. PIPE SIZE (IN)	d (IN)	D (IN)	t (IN)	STRAP GA.	BOLT (IN)	BOLT TORQUE (FT-LB)	DESIGN LOADS (ASD) MAX LOAD 1 (LBS)	MAX LOAD 2 (LBS)	MAX LOAD 3 (LBS)
SCC-13	1½	1.375	1.66	.1425	12	3/16	11	2380	130	210
SCC-15	1½	1.625	1.9	.1375	12	3/16	11	2290	170	170
SCC-20	2	2.125	2.375	.125	11	3/16	11	2570	190	240
SCC-25	2½	2.625	2.875	.125	11	3/16	11	2850	190	200
SCC-30	3	3.125	3.5	.1875	11	3/16	11	3130	210	280
SCC-40	4	4.125	4.5	.1875	11	⅜	20	3210	270	360
SCC-50	5	5.125	5.625	.1875	11	⅜	20	3290	300	300
SCC-60	6	6.125	6.625	.1875	11	⅜	20	3370	360	360

1 - FOR PIPING SUSPENDED FROM STRUT, REFER TO PAGE X8.1.1 FOR COMBINED MAX VERTICAL AND LATERAL LOADS.
2 - LOAD 2 AND LOAD 3 MAY BE ROTATED UP TO 15° MAX FROM THE REFERENCED LOAD DIRECTION IN PLAN.

MASON WEST, INC.
1601 E. Miraloma Ave. Placentia, CA 92870
TEL (714) 630 - 0701, www.masonwest.com

Jief

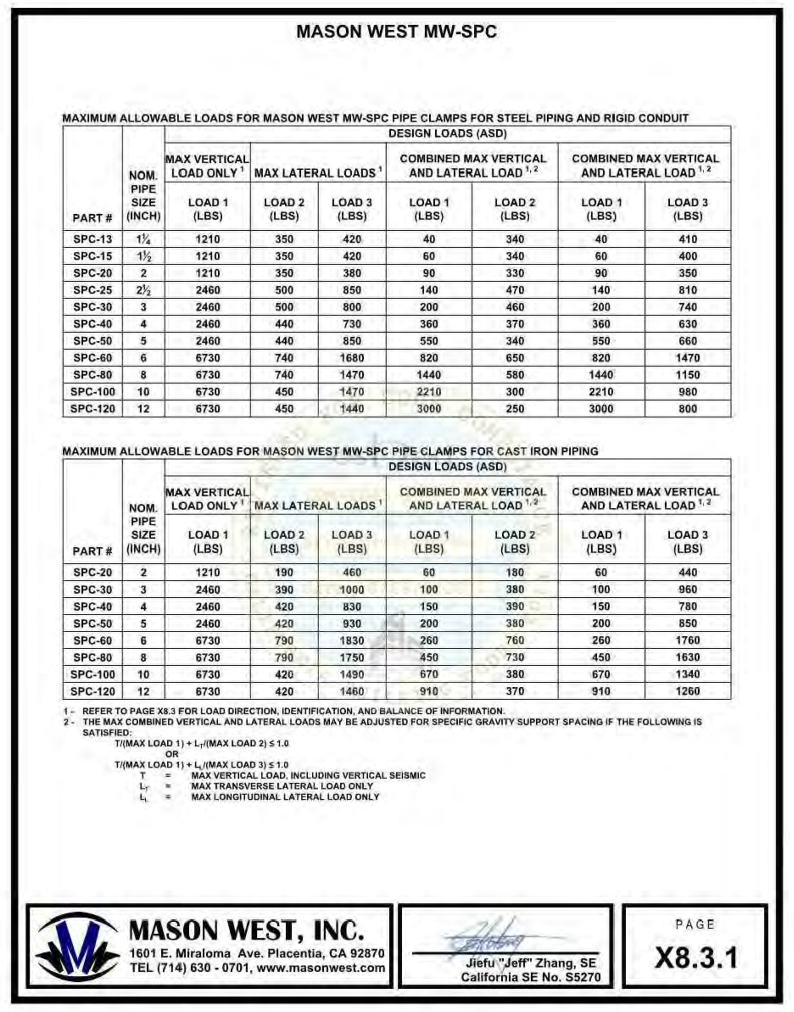

10/09/2020 OPM-0043-13: Reviewed for Code Compliance by Jeffrey Kikumoto 816 of 846

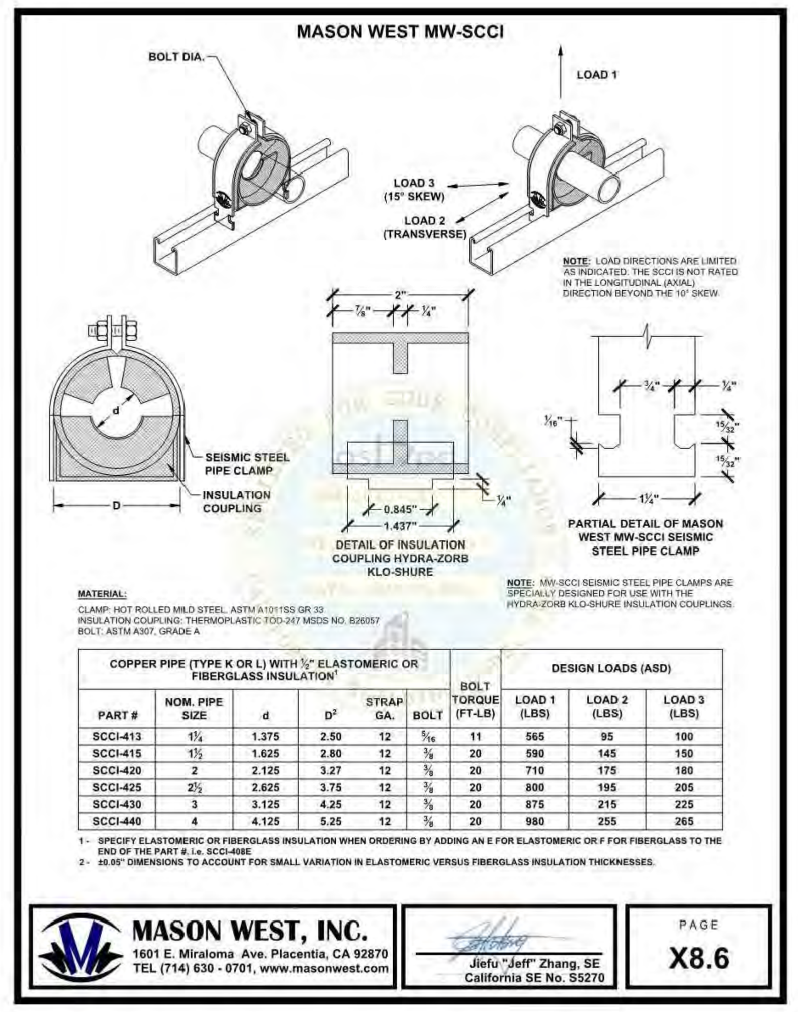

10/09/2020 OPM-0043-13: Reviewed for Code Compliance by Jeffrey Kikumoto 818 of 846

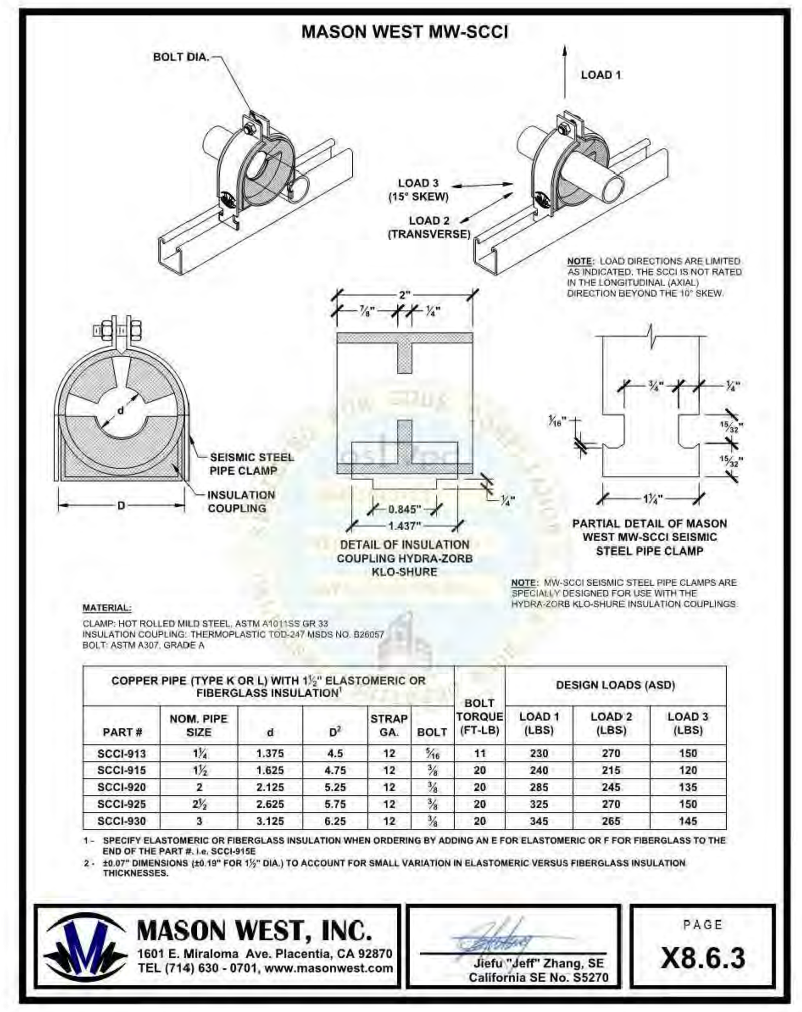

10/09/2020 OPM-0043-13: Reviewed for Code Compliance by Jeffrey Kikumoto 821 of 846

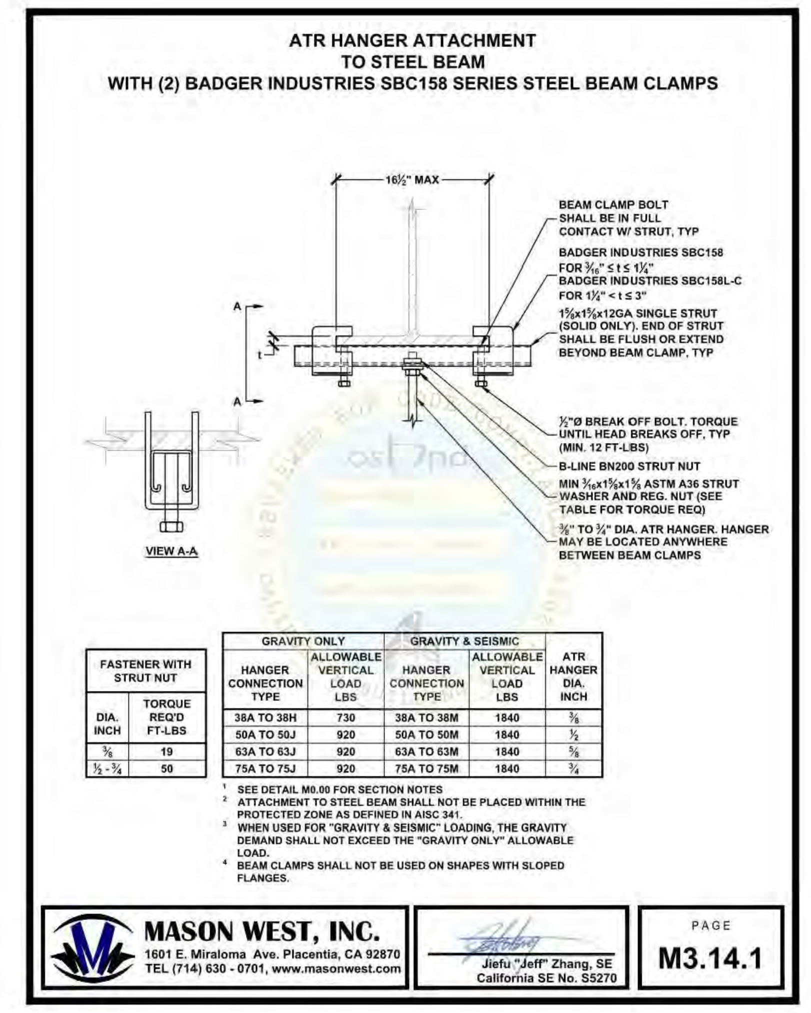

10/09/2020 OPM-0043-13: Reviewed for Code Compliance by Jeffrey Kikumoto 572 of 846

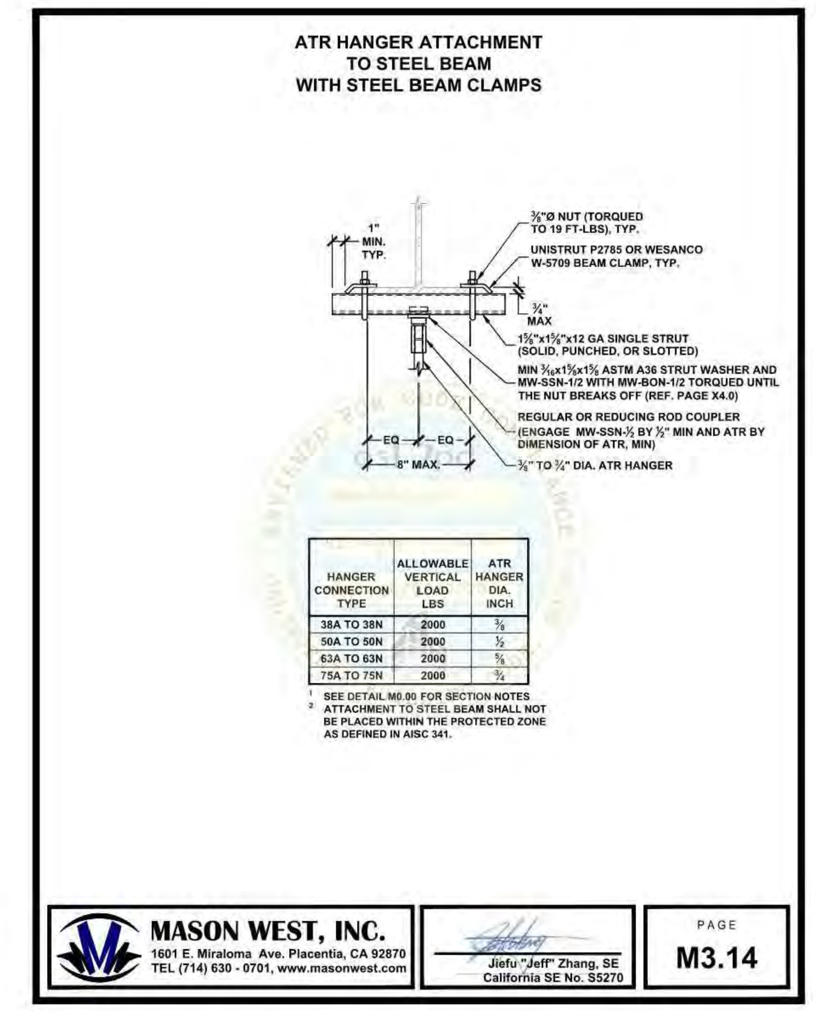

10/09/2020 OPM-0043-13: Reviewed for Code Compliance by Jeffrey Kikumoto 571 of 846

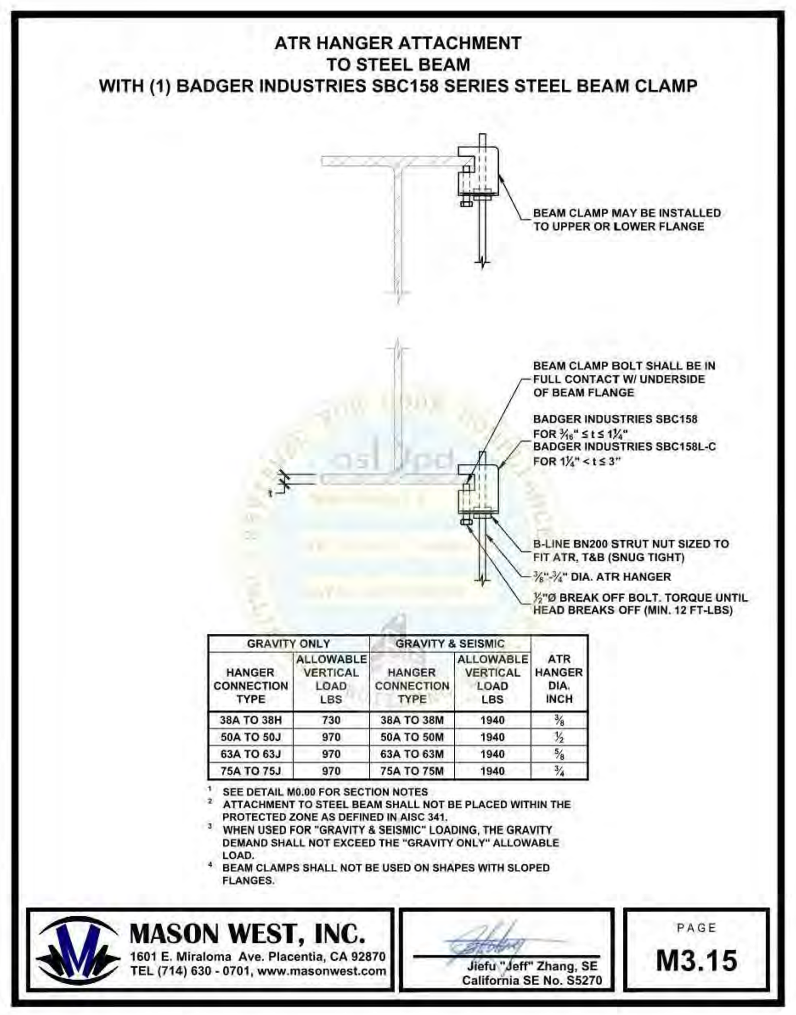

10/09/2020 OPM-0043-13: Reviewed for Code Compliance by Jeffrey Kikumoto 573 of 846

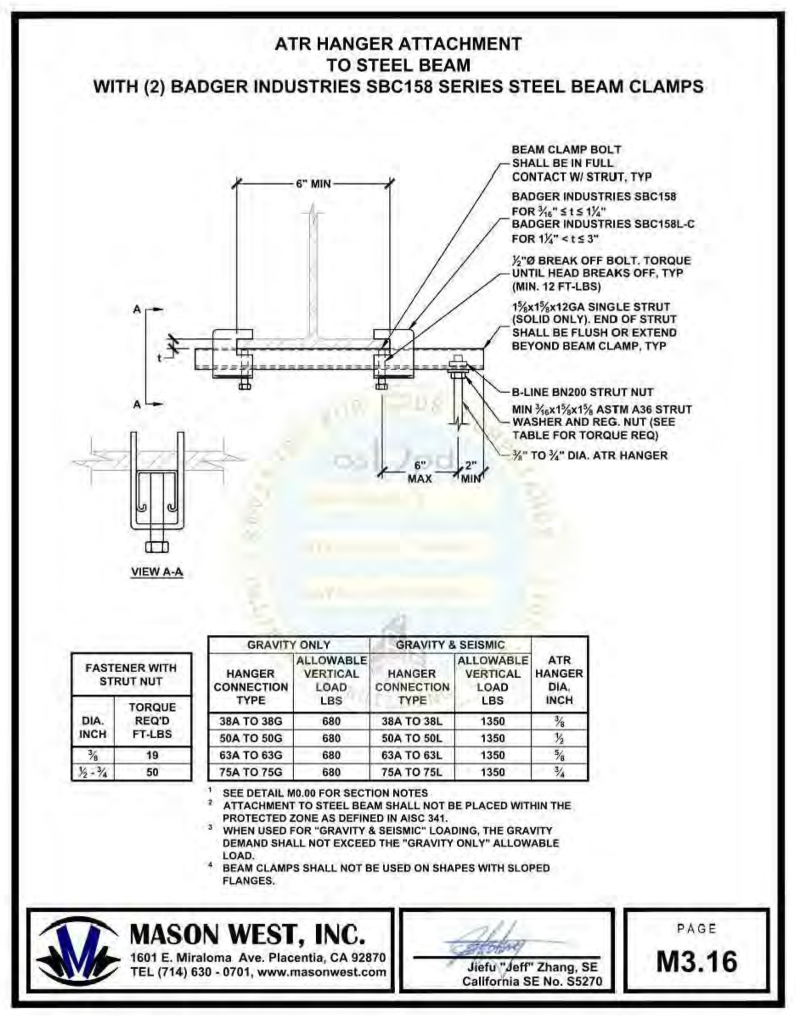

10/09/2020 OPM-0043-13: Reviewed for Code Compliance by Jeffrey Kikumoto 574 of 846

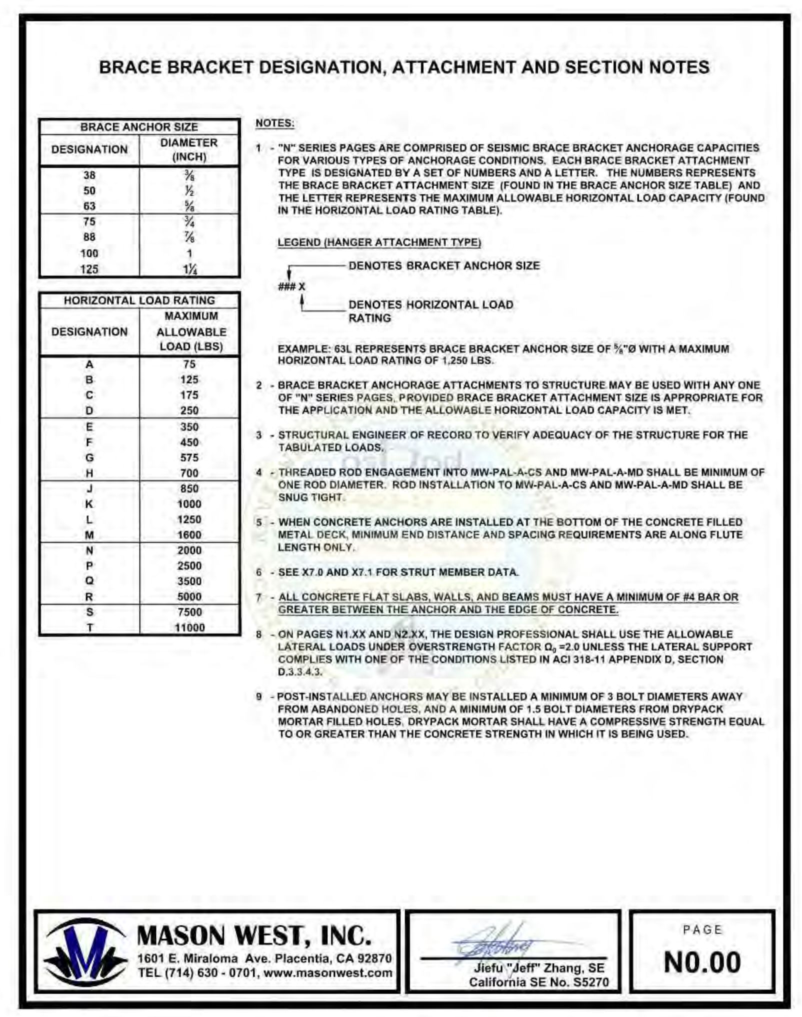

12/19/2016 OPM-0043-13: Reviewed for Code Compliance by Jeffrey Kikumoto Page 506 of 673

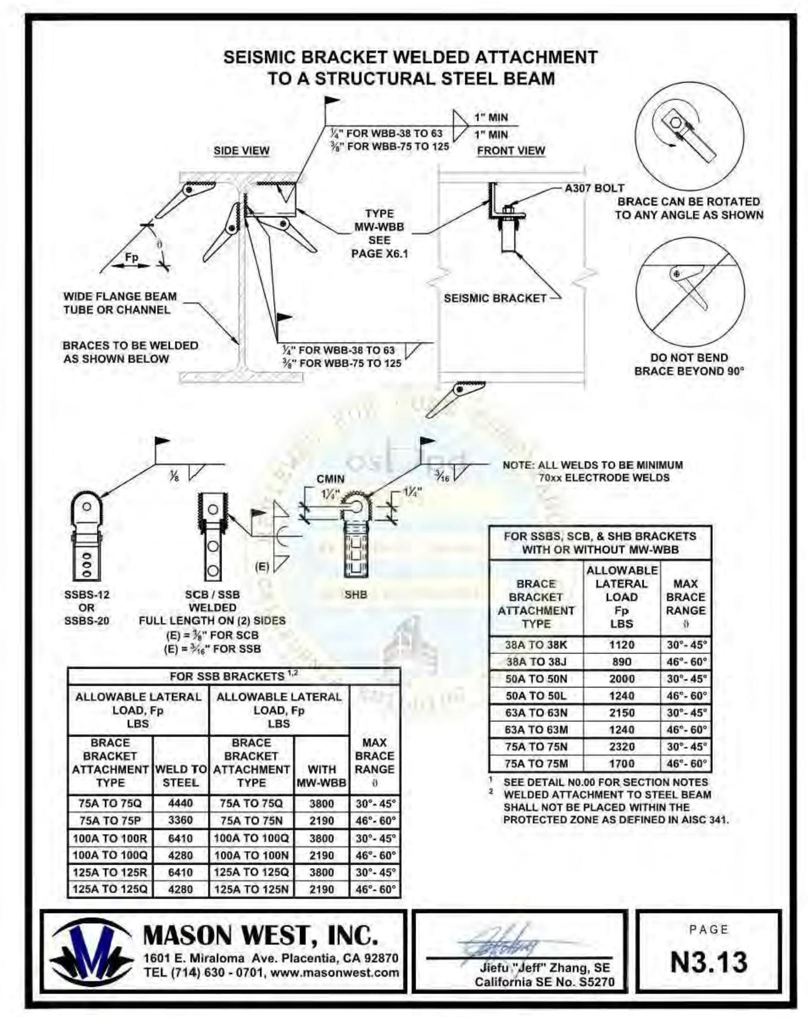

10/09/2020 OPM-0043-13: Reviewed for Code Compliance by Jeffrey Kikumoto 724 of 846

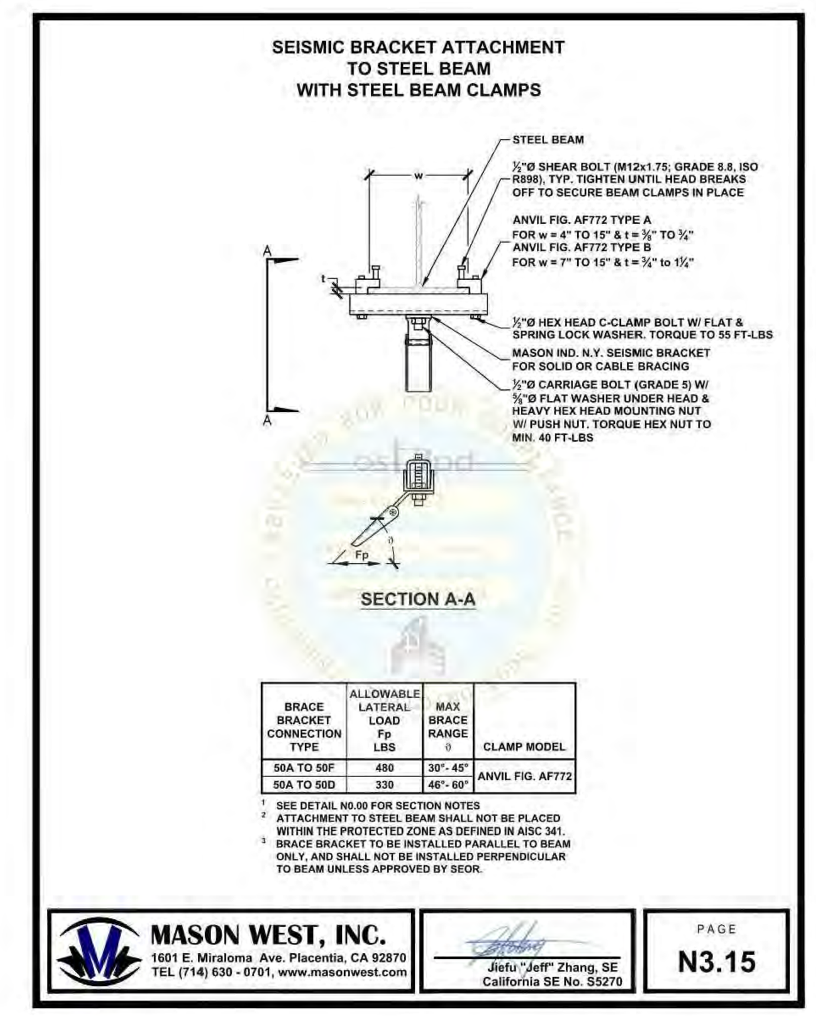

10/09/2020 OPM-0043-13: Reviewed for Code Compliance by Jeffrey Kikumoto 726 of 846

SEE OPM-0043-13 FOR ADDITIONAL NOTES AND DETAILS

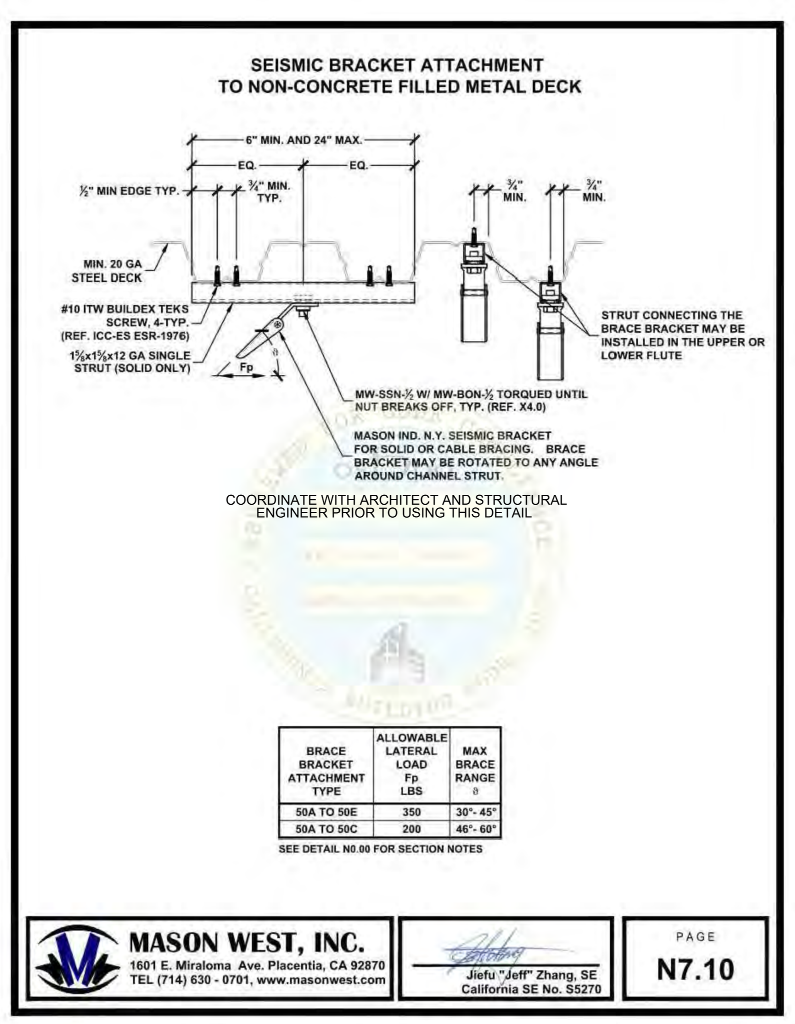

12/19/2016 OPM-0043-13: Reviewed for Code Compliance by Jeffrey Kikumoto Page 578 of 673

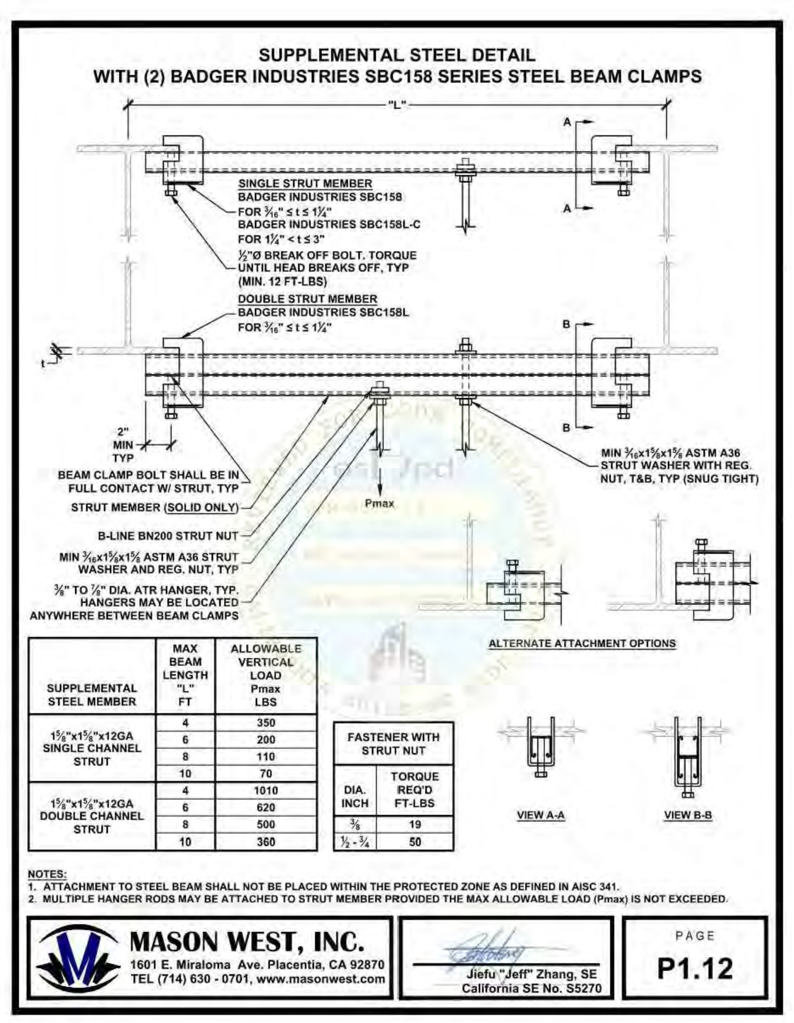

10/09/2020 OPM-0043-13: Reviewed for Code Compliance by Jeffrey Kikumoto 743 of 846

IDENTIFICATION STAMP
DIV. OF THE STATE ARCHITECT
APP: 02-119490 INC:
REVIEWED FOR
SS ☑ FLS ☑ ACS ☑
DATE: 09/13/2022

LPA
ARCHITECTURE ENGINEERING INTERIORS
LANDSCAPE ARCHITECTURE PLANNING
916-287-2400 Office
916-287-2401 Fax
LPADesignStudios.com
431 I Street,
Suite 107
Sacramento, California 95814

AQUATIC DESIGN GROUP

This document and all other project documents, ideas, aesthetics and designs incorporated therein are instruments of service. All project documents are copyright protected, are the property of LPA, Inc. (LPA) and cannot be lawfully used in whole or in part for any project or purpose except as set forth in the contractual agreement between LPA and its Client. The unauthorized disclosure and/or use of the project documents (including the creation of derivative works), may give rise to liability for copyright infringement, unlawful disclosure, use or misappropriation of property rights held by LPA. The unauthorized use of the project documents will give rise to the recovery of monetary losses and damages including attorney fees and costs for which the unauthorized user will be held liable. Project documents describe the design intent of the work and are not a representation of as-built or existing conditions. LPA is not responsible for any discrepancies between the project document and the existing conditions.

© LPA, Inc.

DAVIS SR HIGH SCHOOL
AQUATICS CENTER
315 W 14TH ST., DAVIS, CA 95616
Developed for
DAVIS JOINT UNIFIED SCHOOL DISTRICT

Submittal	Date
50% DD REVIEW	06/15/2021
100% DD SUBMITTAL	07/26/2021
50% CD REVIEW	10/08/2021
100% CD DSA SUBMITTAL	10/22/2021
100% CD DSA RESUBMITTAL	02/16/2022

Job Number	1904413
Date Published	10/22/2021
Checked By	SJF
Scale	

DETAILS

AQ2.11

GENERAL NOTES:

APPLICABLE BUILDING CODE

All construction and workmanship shall conform to the 2019 California Building Code, California Code of Regulations – Title 24, Parts 1 & 2. Poles and foundations have been designed per 2019 CBC, ASCE 7–16, AISC 360–16, AASHTO LRFD Specifications (for pole deflection only), and ACI 318–14.

This pole and foundation standard has been designed for lateral loads on the completed structure as follows:

Wind Design Data:
- Vult = 93 MPH (Exposure C); Vasd = 72 MPH (Exposure C)
- Risk Category = II
- See Pole Foundation Schedule for maximum pole wind forces.

Seismic Design Data:
- I_e = 1.0
- Risk Category = II (Self Supporting Poles)
- S_s = 0.8451
- S_1 = 0.325
- Site Class = D
- S_{DS} = 0.658
- S_{D1} = 0.428
- Seismic Design Category = D
- Basic Seismic–Force–Resisting System = Non–Building Structure, not similar to buildings
- Cs = 0.324 (STRENGTH LEVEL)
- R = 1.5
- Ω = 1.5
- Analysis Procedure = Equivalent Lateral Force Procedure
- See Pole Foundation Schedule for maximum pole seismic forces.

GENERAL CONSTRUCTION

These notes shall be used in conjunction with the plans and any discrepancies shall be brought to the attention of the Registered Design Professional (RDP) in Responsible Charge.

Contractor must check all dimensions, clearances and job conditions before starting work. The RDP in Responsible Charge shall be notified immediately of any discrepancies or possible deficiencies.

The drawings and specifications represent the finished structure. All bracing, temporary supports, shoring, etc., is the sole responsibility of the Contractor. Observation visits to the job site by the RDP in Responsible Charge do not include inspection of construction procedures. The Contractor is solely responsible for all construction methods and for safety conditions at the worksite. These visits by RDP in Responsible Charge shall not be construed as continuous and detailed inspections.

Design, material, equipment, and products other than those described below or indicated on the drawings may be considered for use, provided prior approval is obtained from the School District, the RDP in Responsible Charge, and DSA.

All changes to the approved plans after a contract for construction has been awarded, affecting structural, access or life–safety portions of the project, shall be made by means of construction change documents (CCD) approved by DSA, as required by Section 4–338, Part 1, Title 24, CCR. All CCD shall be prepared and signed by the RDP in general Responsible Charge.

Substitutions shall be considered as a CCD and shall be approved by DSA prior to fabrication or use.

A Class 1 or Class 2 Project Inspector employed by the School District (Owner) and approved by DSA shall provide continuous inspection of the work, the duties of the Inspector are defined In Section 4–342, Part 1, Title 24, CCR.

All Tests And Inspections shall be performed by an Independent lab employed by the School District and approved by DSA.

Reference pole location on the Architectural, Structural, and/or Electrical drawings for actual pole placement and site location. Pole shall be located 5'–0" min. from adjacent structures below 50'–0" above ground level (A.G.L.), unless noted otherwise.

LIGHT POLE FOUNDATIONS

Reference geotechnical report prepared by Wallace Kuhl & Associates, Dated February 17, 2021; Project no. 13012.01P.

Allowable Vertical soil Capacity – 3,000 PSF (End Bearing), 250 PSF (Skin Friction).

Allowable Lateral Bearing capacity: 250 PSF/FT. The upper 12 inches of soil shall be neglected.

A representative of Wallace Kuhl & Associates should be available at the time of the foundation installation to verify the soil design parameters and to provide assistance if any problems arise in foundation installation.

The Contractor must familiarize himself with the complete geotechnical report, and borings and contact the above firm to understand the soil conditions and the possibility of ground water pumping and excavation stabilization or bracing during the foundation installation and placement of concrete.

Soil formations that will require special design considerations or excavation procedures may exist. Pole foundations may need to be reanalyzed according to the soil conditions that exist.

If any discrepancies or inconsistencies arise, notify the RDP in Responsible Charge of such discrepancies.

All piers and concrete must bear on and against firm undisturbed soil as determined by the Geotechnical Engineer.

Place plywood collar around perimeter at the top of foundation excavation to prevent soil from entering pier.

All excavations must be free of loose soil, and debris prior to foundation installation and placement of concrete. Casing or drilling slurry may be required if caving occurs. Review and approval of the Geotechnical Engineer and DSA is required.

All excavations must be free of water or concrete shall be placed by the Tremie Method in accordance with ACI standard 336. Concrete placed by the Tremie Method shall have a minimum ultimate strength of 1,000 PSI greater than required under "Concrete Cast–In–Place' and a maximum slump of 8".

CONCRETE (CAST–IN–PLACE)

Concrete pier foundations with steel reinforcement shall attain a minimum ultimate compressive strength at 28 day test of 3,000 psi. Batch plant inspection not required.

All concrete shall attain a minimum strength of 2,500 psi prior to steel pole erection.

Use Type II/V Portland cement or as directed by the Geotechnical Engineer.

Portland Cement ASTM C–150.

Aggregate ASTM C–33. 1" maximum aggregate size. 3/8" max agg. size are not permitted.

Mix in conformance with ASTM C–94, ACI 318 SECTIONS 19.2 and 26.4.

Place concrete immediately after completion of excavation and inspection by the Geotechnical Engineer and the DSA Inspector. Under no circumstances shall piers be allowed to remain open for more than 12 hours without the approval of the Geotechnical Engineer. Excavations shall be covered and protected until filled with concrete.

Concrete shall be placed in one continuous operation (no construction joint) with special equipment to assure a maximum freefall of 5 ft and to prevent concrete from striking the sides of the excavation. Freefall of concrete is unacceptable through water or drilling slurry.

Vibrate concrete full depth, except for concrete with slump greater than 6", then vibrate only upper 10'–0". Concrete placed under water shall have a slump of 6"–8".

STEEL POLE

Steel pole sections conform to the California Code of Regulations T.24, Part 2, Chapter 22A.

All steel conforms to referenced ASTM specifications. (See Pole Data Table for each pole type).

All weldment conforms with AWS D1.1–10 specification for GMAW fillet utilizing E70S–X filler metal or SAW fillet utilizing F7XX–EXXX or F8XX–EXXX filler metal.
GMAW procedure conforms to AWS A5.18.
SAW procedure conforms to AWS A5.23.

Longitudinal seam welds for pole sections shall have 60% minimum penetration; Except longitudinal seam welds on the female section of telescopic field splices shall be full penetration groove welds for a length equal to the minimum splice length plus 6 inches. See drawing number MD1 for seam weld details.

Pole sections hot dipped galvanized to ASTM A123 latest standards.

All miscellaneous structural steel items conform to AISC 360–16.

Steel pole sections shall be assembled in the field by attaching two 1.5 ton "come alongs" to jacking ears, using full effort on each simultaneously, to ensure minimum overlaps as indicated on the "MS" sheet(s) and detail G/MD1.

PRECAST BASE

The precast concrete base conforms to California Code of Regulations, T.24, part 2, Chapter 19A and to Building Code Requirements for Reinforced Concrete, ACI 318–14.

See detail "A" on "MS" sheet(s) for material strengths and specifications.

TESTING AND INSPECTION

Testing and inspection in accordance with Title 24, Part 1 & Part 2.

EXCAVATIONS & FOUNDATIONS:
Inspection of cast–in–place deep foundations – 1705A.8 & Table 1705A.8

CONCRETE MATERIALS: 1903A.1
Portland cement – 1910A.1
Concrete aggregates – 1903A.5
Reinforcing bars – 1910A.2 & DSA IR 17–10
Prestressing steel and anchorages – 1910A.3

CONCRETE QUALITY:
Proportions of concrete – Reference ACI 318 Section 26.4.3.1 Through 26.4.4.1.
Strength tests of concrete – 1905A.1.15 and ACI 318 Section 26.12 & 26.5.3.2.

CONCRETE INSPECTION: 1705A.3 & Table 1705A.3
Job site – Reference ACI 318 Section 26.5.1,26.5.2.1(a) & (b),26.6.1.2(d), 26.11.1.1(a).
Batch Plant Inspection Not Required – 1705A.3.3.2
Prestressed concrete – 1704A.2.5, 1705A.3.4

STEEL MATERIALS:
Structural steel – 2202A.1 & 2205A.1
Cold formed steel – 2210A.1
Identification – 2202A.1

STEEL QUALITY:
Tests of structural steel & cold formed steel – 2202A.1

STRUCTURAL STEEL INSPECTIONS: Table 1705A.2.1
Shop fabrication inspection – 1704A2.5
Welding – 1705A.2.5, DSA IR 17–3 and AWS D1.1.
(NOTE: ALL WELDING SHALL BE CONTINUOUSLY INSPECTED BY AN AWS CWI CERTIFIED INSPECTOR APPROVED BY DSA)

These plans are for construction approval. An application number and approval of these drawings by the Division of The State Architect of California must be secured to build from these plans.

IDENTIFICATION STAMP
DIV. OF THE STATE ARCHITECT
APP: 02-119490 INC:
REVIEWED FOR
SS ☑ FLS ☑ ACS ☑
DATE: 09/13/2022

INDEX OF SHEETS

MT1	NOTES, FOUNDATION DETAIL
MS1	50B POLE DETAILS
MD1	ATTACHMENT DETAILS
MD2	ATTACHMENT DETAILS
MD3	ATTACHMENT DETAILS
MD4	PHOTOMETRICS PLANS

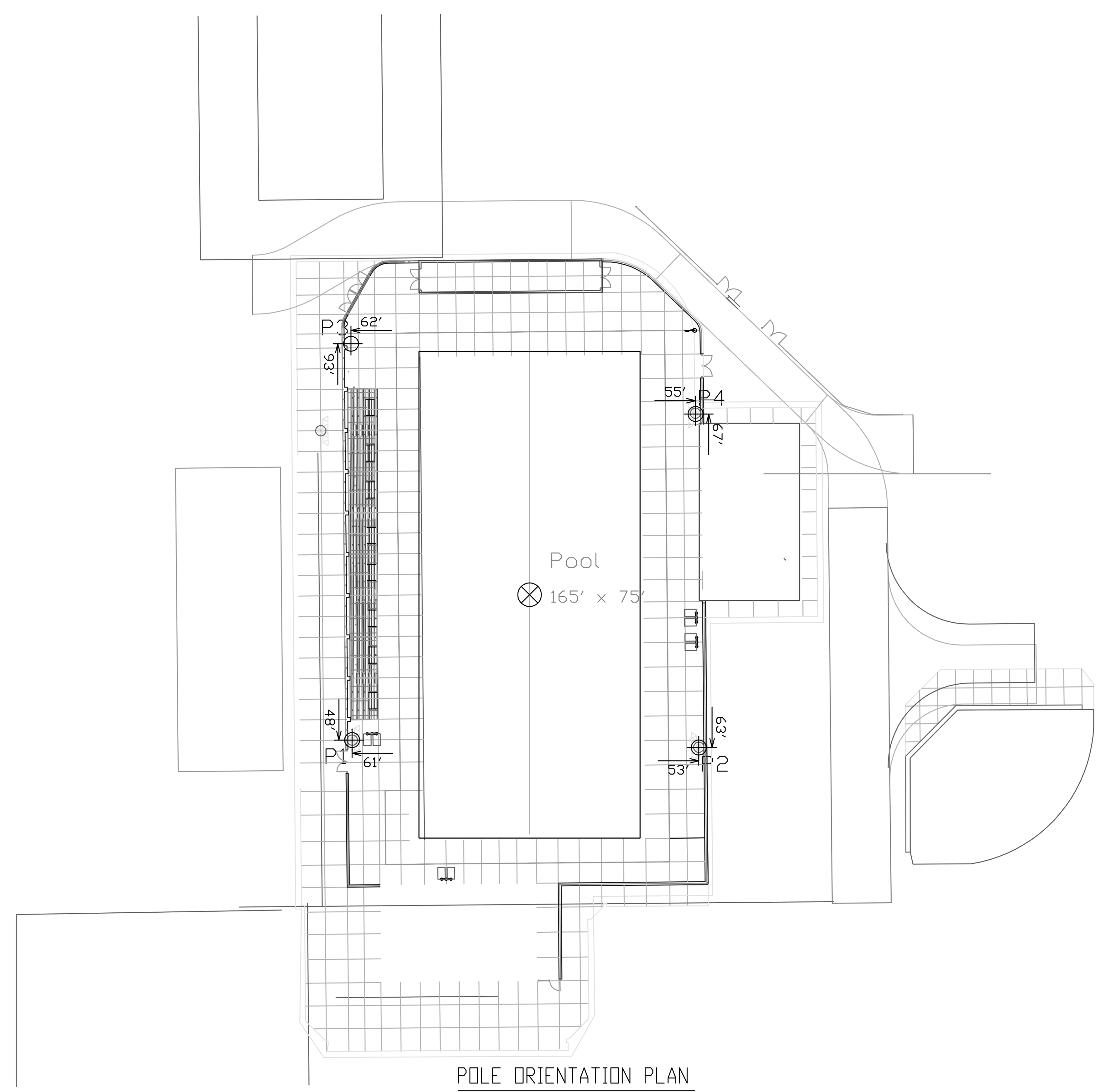

POLE ORIENTATION PLAN
N.T.S.

NOTE: THIS PLAN IS A PICTORAL REPRESENTATION OF THE SITE LAYOUT. REFERENCE APPROPRIATE ARCHITECTURAL SITE PLAN FOR ALL NECESSARY INFORMATION.

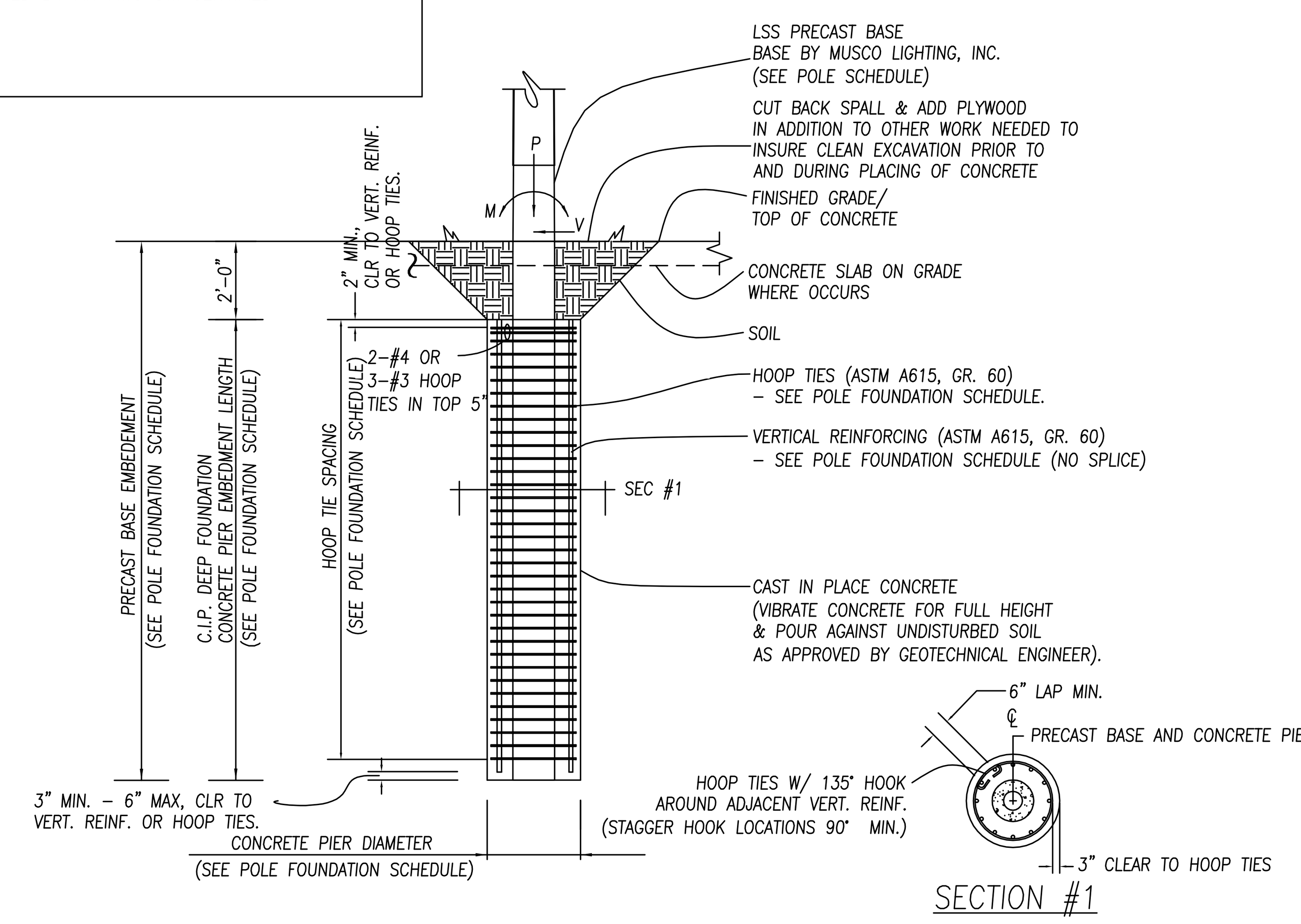

(A) REINFORCED FOUNDATION DETAIL
N.T.S.

POLE FOUNDATION SCHEDULE

POLE TYPE–# OF FIXTURES (MAX) (LSS=LIGHT STRUCTURE)	MARK (SEE POLE ORIENTATION PLAN)	WIND OR SEISMIC (SEISMIC FORCE INCLUDES OVERSTRENGTH FACTOR=1.5)	ASD LEVEL FORCES (MAX)			C.I.P. DEEP FOUNDATION				PRECAST BASE
			MOMENT (M) FT–LBS*	SHEAR (V) LBS	VERTICAL (P) LBS**	DIAMETER INCHES	EMBEDMENT FEET (SEE NOTE BELOW)	VERTICAL REINFORCING (ASTM A615, GR 60)	HOOP TIE SIZE & SPACING (ASTM A615, GR 60)	EMBEDMENT FEET
LSS50B–3	P1, P2, P3, P4	SEISMIC	21,200	665	1,957	36"	8'–0"	8–#5	#4 @ 10" O.C.	10'–0"
		WIND	27,400	818	1,180					

*Moment (M) computed below grade at Shear (V) = 0.
**Vertical (P) load includes steel pole, light fixtures, and attachments. Vertical (P) load for wind is the dressed pole weight for erection purposes. Vertical (P) load for seismic also includes weight of precast base above groundline. Reference Detail "A" on MS Sheet(s) for precast base weight.
Note:
Final Embedment to be determined in the field by the Geotechnical Engineer of Record. If design parameters change based on discoveries made during construction, design shall be revised and submitted to DSA for review.

Davis High School Aquatics
FIELD LIGHTING
Davis, CA

CONSULTANT
KNA STRUCTURAL ENGINEERS
9931 Muirlands Boulevard, Irvine, CA 92618
Tel (949) 462-3200 • Fax (949) 462-3201
www.KNAstructural.com
KNA JOB NO.: 363.873

REGISTERED PROFESSIONAL ENGINEER
No. 4506
Exp. 6-30-23
STRUCTURAL
STATE OF CALIFORNIA

MUSCO Lighting
CORPORATE OFFICE:
P.O. Box 808
100 1st Avenue West
Oskaloosa, Iowa 52577
800/825–6020

DRAWING TITLE: NOTES, FOUNDATION DETAIL
SCALE: SEE PLAN
REVISIONS:
REFERENCE:
PROJECT NO. 211030
DATE: 10/19/2021
DRAWN BY: H.Sabers
DRAWING NO. MT1

Information contained herein is the confidential property of Musco Sports Lighting, LLC and/or its parent companies, affiliates, successors and assigns. Reproduction, distribution, or use of the information other than its limited, intended purpose without express written permission is prohibited.
Musco products referenced or shown are protected by one or more of the following patents. U.S. Patents: 4947303; 4994718; 5075828; 5134557; 5161883; 5211473; 5229681; 5377611; 5398478; 5423281; 5426577; 5600537; 5794387; 5856721; 6036338; 6203176; 6250596; 6340790; 6398392; 6681110; 6833675; 6929385; 6969034; 6988697; 7059572; D337168; D353797; D353911; D411096. Other patents pending.

DSA–TITLE1_E

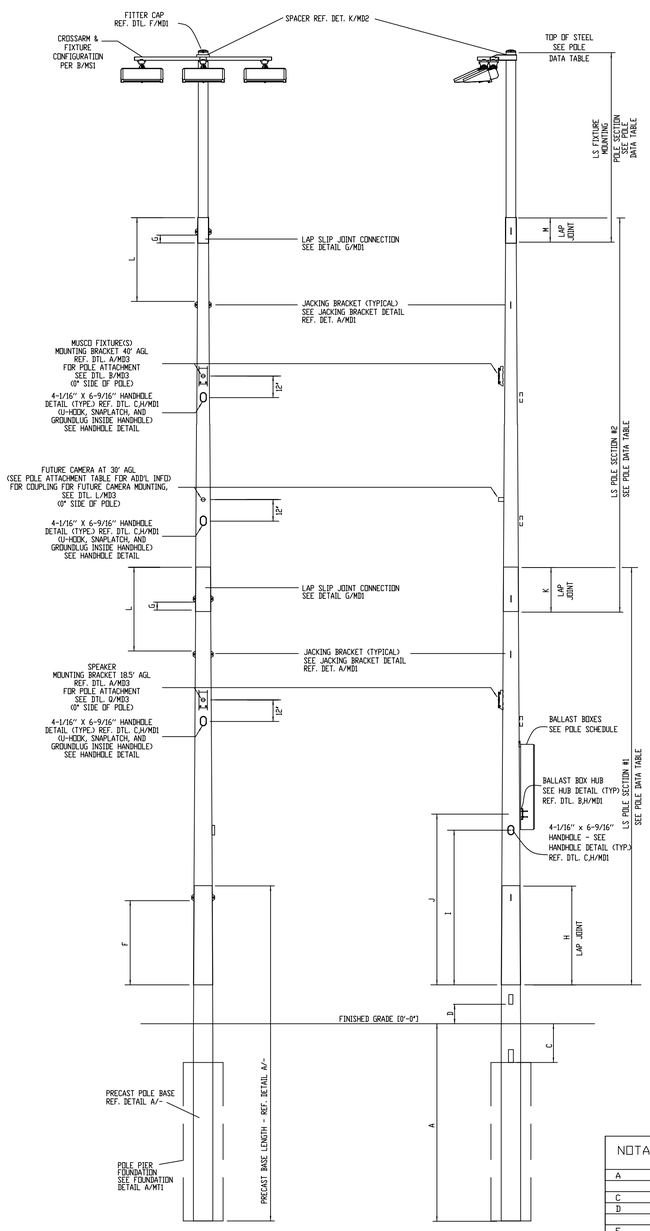

LSS50B POLE FRONT VIEW
N.T.S.

LSS50B POLE SIDE VIEW
N.T.S.

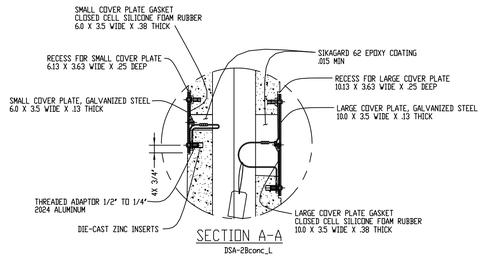

SECTION A-A
DSA-2Bconc_L

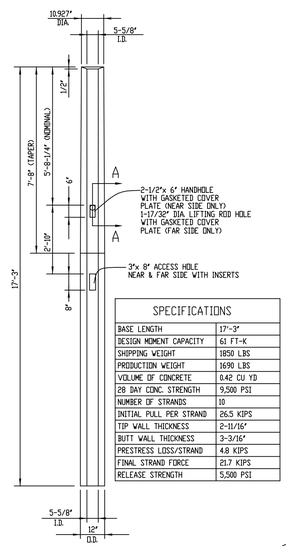

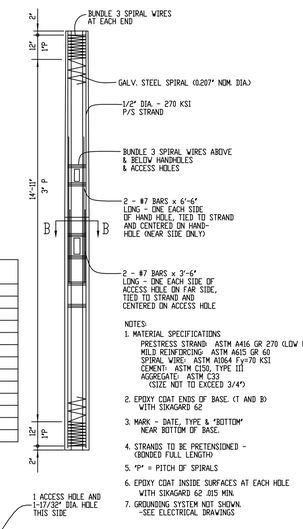

NOTES:
1. MATERIAL SPECIFICATIONS
   PRESTRESS STRAND: ASTM A416 GR 270 (LOW RELAXATION)
   MILD REINFORCING: ASTM A615 GR 60
   SPIRAL WIRE: ASTM A1064 Fy=70 KSI
   CEMENT: ASTM C150, TYPE III
   AGGREGATE: ASTM C33
   (SIZE NOT TO EXCEED 3/4")
2. EPOXY COAT ENDS OF BASE. (T AND B) WITH SIKAGARD 62
3. MARK - DATE, TYPE & "BOTTOM" NEAR BOTTOM OF BASE.
4. STRANDS TO BE PRETENSIONED - (BONDED FULL LENGTH)
5. "P" = PITCH OF SPIRALS
6. EPOXY COAT INSIDE SURFACES AT EACH HOLE WITH SIKAGARD 62 .015 MIN.
7. GROUNDING SYSTEM NOT SHOWN. -SEE ELECTRICAL DRAWINGS

SPECIFICATIONS

BASE LENGTH	17'-3"
DESIGN MOMENT CAPACITY	61 FT-K
SHIPPING WEIGHT	1850 LBS
PRODUCTION WEIGHT	1690 LBS
VOLUME OF CONCRETE	0.42 CU YD
28 DAY CONC. STRENGTH	9,500 PSI
NUMBER OF STRANDS	10
INITIAL PULL PER STRAND	26.5 KIPS
TIP WALL THICKNESS	2-11/16"
BUTT WALL THICKNESS	3-3/16"
PRESTRESS LOSS/STRAND	4.8 KIPS
FINAL STRAND FORCE	21.7 KIPS
RELEASE STRENGTH	5,500 PSI

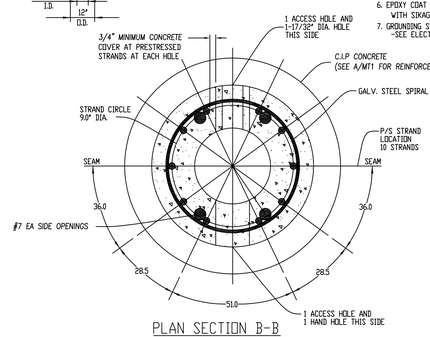

PLAN SECTION B-B

A TYPE 2B PRECAST BASE DETAIL
N.T.S.

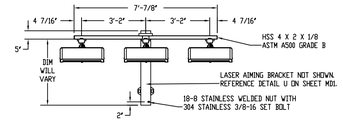

B 3 FIXTURE CONFIGURATION
N.T.S. DSA-3C-WEDGE4_A

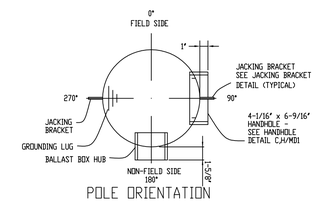

POLE ORIENTATION
N.T.S.

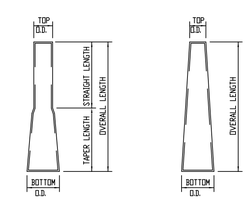

FIXTURE MOUNTING POLE SECTION

TOP/MIDDLE/BOTTOM POLE SECTION

POLE ATTACHMENTS TABLE

ATTACHMENT TYPE	QUANTITY	DISTANCE A.G.L. (FT)	TOTAL EFFECTIVE PROJECTED AREA[2] (SQ. FT)	TOTAL WEIGHT[2] (LBS)
LED1200 FIXTURE	3	50.97	8.12	168.0
LED600 FIXTURE	1	40.00	2.77	71.0
FUTURE CAMERA[2]	1	30.00	3.90	50.0
JBL AWC82 SPEAKER	1	18.50	2.38	56.5
ECE	4	12.00	20.80	80.0

1. EPA AND WEIGHT INCLUDE ALL FIXTURES, CROSSARMS, AND MISCELLANEOUS FIXTURE/ATTACHMENT MOUNTING HARDWARE/BRACKETS.
2. EFFECTIVE PROJECTED AREA AND WEIGHT OF FUTURE CAMERA AND ASSOCIATED MOUNTING HARDWARE SHALL BE EQUAL TO OR LESS THAN THE VALUES LISTED IN THIS TABLE.

1. CONTAINS COMBINED EPA OF LIGHT FIXTURES, CROSS ARM AND MISCELLANEOUS FIXTURE MOUNTING APPARATUS.

MAX. FIXTURE WEIGHT 56.0 LBS. THIS INCLUDES THE WEIGHT OF FIXTURE, CROSS ARM & MISC. MOUNTING APPARATUS. ELECTRICAL BALLAST BOX WEIGHT 20 LBS PER FIXTURE SERVICED

POLE SCHEDULE

SITE LOCATION	POLE MARK	REFERENCE LOCATION	POLE TYPE	FIXTURE CONFIGURATION	TOTAL EPA[1]	BALLAST BOX REQUIREMENTS
SEE SITE PLAN (BY OTHERS)	P1, P2, P3, P4	SEE POLE ORIENTATION PLAN	LSS50B	3 - SEE DETAIL B/MS1	81 (MAX.)	SEE DETAIL P,Q,/M01

NOTATION	DIMENSION LSS50B
A	10'-0"
C	2'-0" NOM.
D	1'-0" NOM.
F	4'-4" NOM.
G	1'-6"
H	5'-1 1/4" NOM. 4'-7 3/8" MIN.
I	7'-7 1/2" NOM.
J	8'-9 1/2" NOM.
K	3'-7 1/4" NOM. 1'-10 1/4" MIN.
L	4'-7" NOM.
M	1'-10" NOM. 1'-3" MIN.

POLE DATA TABLE

POLE TYPE	PIECE MARK	MAX NUMBER OF X-Arms	POLE SECTION	TOP O.D. (INCHES)	BTM. O.D. (INCHES)	OVERALL LENGTH	STRAIGHT LENGTH	TAPER LENGTH	THICKNESS (INCHES)	TOP OF STEEL NOMINAL*	ASTM REFERENCE
LSS50B	LS-2009	1	FIXTURE MOUNTING	6.000"	6.505"	5'-3"	3'-5"	1'-10"	.120	50'-0 7/8"	A513 (Fy=38ksi)
	MP-1TTDSA-2		#2	5.980"	9.630"	26'-0 7/8"	-----	26'-0 7/8"	.120	-----	A595A (Fy=55 ksi) or A572, Gr 55 or 65
	MP-1BT-D		#1	8.886"	12.000"	22'-2 7/8"	-----	22'-2 7/8"	.179	-----	A595A (Fy=55 ksi) or A572, Gr 55 or 65
	MP-2BDSA		PRECAST BASE				FOR PRECAST MEMBER PROPERTIES SEE PRECAST BASE DETAIL A/-				

*NOTE: MAXIMUM EXPECTED POLE HEIGHT IS 51'-5 5/8"

DSA-50_A

IDENTIFICATION STAMP
DIV. OF THE STATE ARCHITECT
APP: 02-119490 INC:
REVIEWED FOR
SS ☑ FLS ☑ ACS ☑
DATE: 09/13/2022

Davis High School Aquatics
FIELD LIGHTING
Davis,CA

REGISTERED PROFESSIONAL ENGINEER
KIMON J. ZOUMAS
Exp. 6-30-23
STRUCTURAL
STATE OF CALIFORNIA

CONSULTANT
KNA STRUCTURAL ENGINEERS
9931 Muirlands Blvd, Suite F
Irvine, CA 92618
Tel: (949) 462-2200 • Fax: (949) 462-3201
www.knastructural.com
KNA JOB NO.: 363.073

musco Lighting
CORPORATE OFFICE:
P.O. Box 808
100 1st Avenue West
Oskaloosa, Iowa 52577
800/825-6020

DRAWING TITLE: POLE DETAIL
SCALE: SEE PLAN
REVISIONS
REFERENCE:

PROJECT NO. 211030
DATE: 10/19/2021
DRAWN BY: H.Sabers
DRAWING NO. MS1
2 OF 6

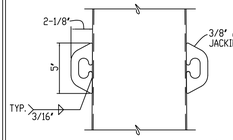

A JACKING BRACKET DETAIL
N.T.S. DSA-3RDSHEET_T

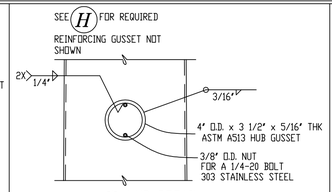

B HUB DETAIL
N.T.S. DSA-3RDSHEET_T

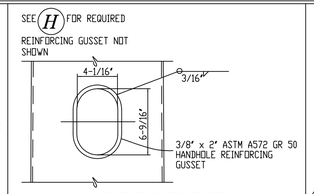

C HANDHOLE SLEEVE DETAIL
N.T.S. DSA-3RDSHEET_T

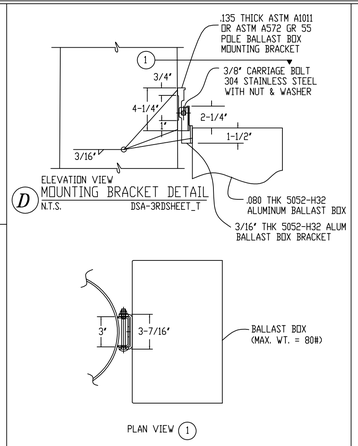

D MOUNTING BRACKET DETAIL
N.T.S. DSA-3RDSHEET_T

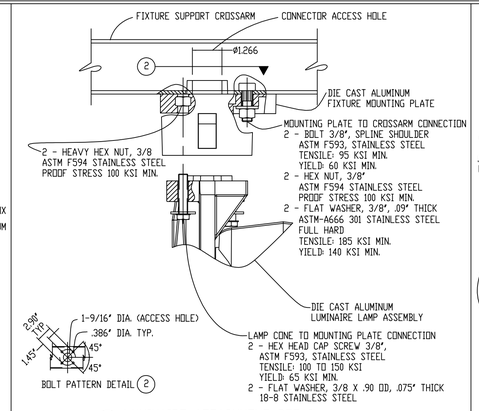

E LUMINAIRE ATTACHMENT DETAIL
N.T.S. DSA-3RDSHEET_T

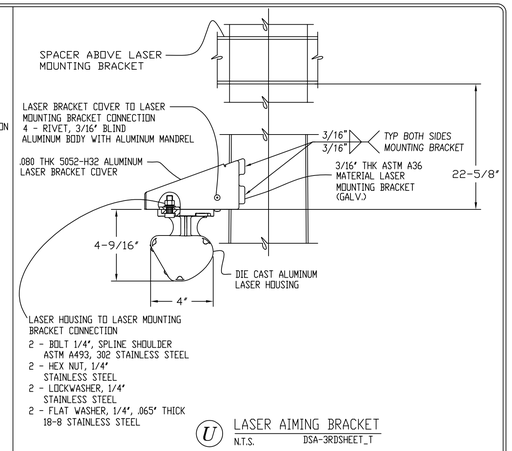

U LASER AIMING BRACKET
N.T.S. DSA-3RDSHEET_T

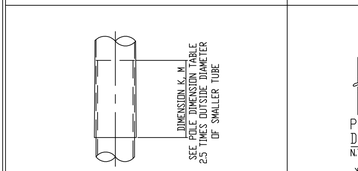

G SLIP JOINT CONNECTION DETAIL
N.T.S. DSA-LAP

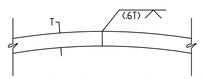

POLE LONGITUDINAL SEAM WELD
DETAIL TYPICAL CONDITION *
N.T.S. DSA-3RDSHEET_T

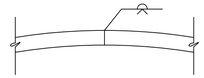

POLE LONGITUDINAL SEAM WELD DETAIL
AT LAP SPLICES (FEMALE END) *
N.T.S. DSA-3RDSHEET_T

* NOTE- 100% PENETRATION SEAM WELDS MAY BE PROVIDED FULL LENGTH OF POLE SHAFTS PROVIDED WPS'S ARE QUALIFIED BY TEST.

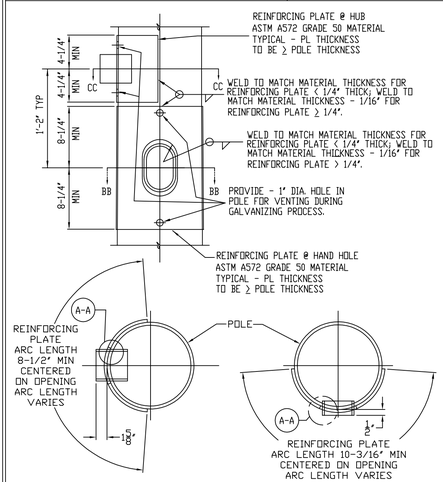

H HANDHOLE/HUB REINFORCING GUSSET
N.T.S.

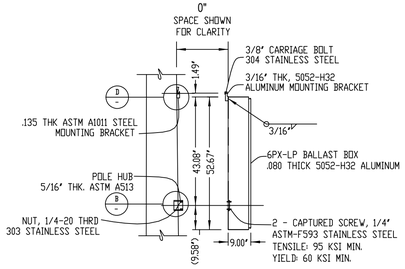

6PX-LP
P BALLAST BOX CONNECTION DETAIL
N.T.S. STRU-6PXLP_E

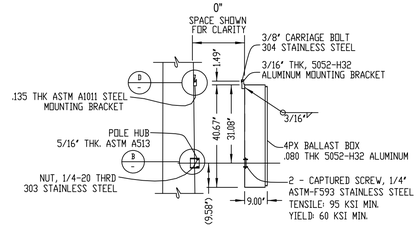

4PX
O BALLAST BOX CONNECTION DETAIL
N.T.S. STRU-4PX_E

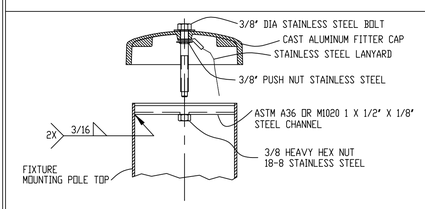

F FITTER CAP DETAIL
N.T.S. DSA-3RDSHEET_T

Information contained herein is the confidential property of Musco Sports Lighting, LLC and/or its parent companies, affiliates, successors and assigns. Reproduction, distribution, or use of the information other than its limited, intended purpose without express written permission is prohibited. Musco products referenced or shown are protected by one or more of the following patents. U.S. Patents: 4947303; 4994718; 5075828; 5134557; 5161883; 5211473; 5229681; 5377611; 5398478; 5423281; 5426577; 5600537; 5794387; 5856721; 6036338; 6203176; 6250596; 6340790; 6398392; 6681110; 6833675; 6929385; 6969034; 6988697; 7059572; D337168; D353797; D353911; D411096. Other patents pending.

IDENTIFICATION STAMP
DIV. OF THE STATE ARCHITECT
APP: 02-119490 INC:
REVIEWED FOR
SS ☑ FLS ☑ ACS ☑
DATE: 09/13/2022

Davis High School Aquatics
FIELD LIGHTING
Davis, CA

CONSULTANT
KNA STRUCTURAL ENGINEERS
9911 Business Park Drive, Suite D1-D2
Tel: (916) 362-2000 Fax: (916) 362-3201
www.KNAStructural.com
KNA JOB NO.: 363.873

musco Lighting
CORPORATE OFFICE:
P.O. Box 808
100 1st Avenue West
Oskaloosa, Iowa 52577
800/825-6020

DRAWING TITLE: ATTACHMENT DETAILS
SCALE: SEE PLAN
REVISIONS:
REFERENCE:

PROJECT NO. 211030

DATE: 10/19/2021

DRAWN BY: H.Sabers

DRAWING NO. MD1
3 OF 6

STRU-MD1

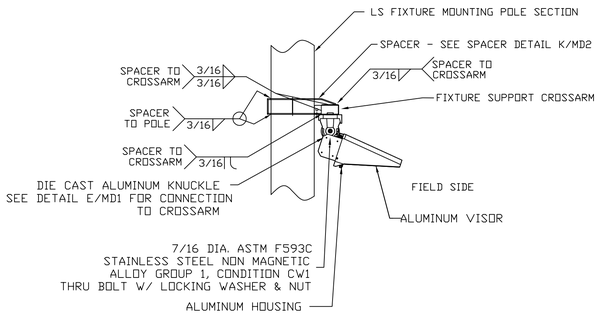

J LIGHT FIXTURE (TYPICAL)
N.T.S. DSA-WEDGE4-WELDON_A

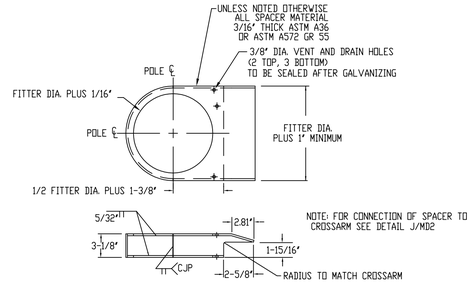

K SPACER DETAIL
N.T.S. DSA-SPACERWELDON_K

Information contained herein is the confidential property of Musco Sports Lighting, LLC and/or its parent companies, affiliates, successors and assigns. Reproduction, distribution, or use of the information other than its limited, intended purpose without express written permission is prohibited. Musco products referenced or shown are protected by one or more of the following patents. U.S. Patents: 4947303; 4994718; 5075828; 5134557; 5161883; 5211473; 5229681; 5377611; 5398478; 5423281; 5426577; 5600537; 5794387; 5856721; 6036338; 6203176; 6250596; 6340790; 6398392; 6681110; 6833675; 6929385; 6969034; 6988697; 7059572; D337168; D353797; D353911; D411096. Other patents pending.

IDENTIFICATION STAMP
DIV. OF THE STATE ARCHITECT
APP: 02-119490 INC:
REVIEWED FOR
SS ☑ FLS ☑ ACS ☑
DATE: 09/13/2022

Davis High School Aquatics
FIELD LIGHTING
Davis, CA

REGISTERED PROFESSIONAL ENGINEER
HOSSEIN SABERS
Exp. 6-30-23
STRUCTURAL
STATE OF CALIFORNIA

CONSULTANT
KNA STRUCTURAL ENGINEERS
9931 Martinez Boulevard Winn, CA 95219
Tel: (949) 362-0200 Fax: (949) 462-5201
www.knastructural.com
KNA JOB NO.: 363.873

musco Lighting
CORPORATE OFFICE:
P.O. Box 808
100 1st Avenue West
Oskaloosa, Iowa 52577
800/825-6020

DRAWING TITLE: ATTACHMENT DETAILS
SCALE: SEE PLAN
REVISIONS:
REFERENCE:

PROJECT NO. 211030
DATE: 10/19/2021
DRAWN BY: H.Sabers
DRAWING NO. MD2
4 OF 6

STRU-MD2

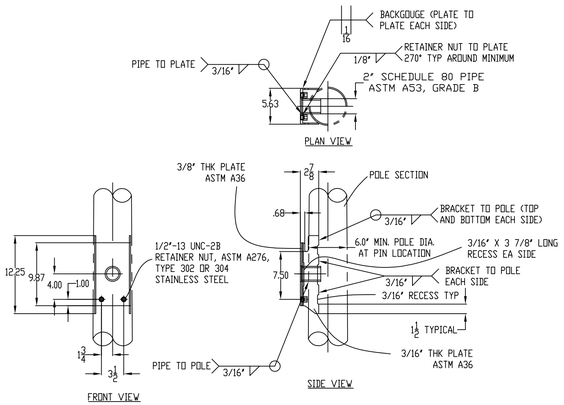

A BRACKET DETAIL
N.T.S. DSA-Brk-Dtl-L_A

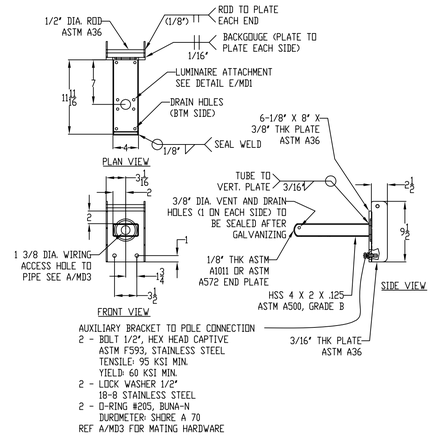

B 1P AUXILIARY MOUNTING BRACKET
N.T.S. DSA-1P FIXTURE MOUNT_E

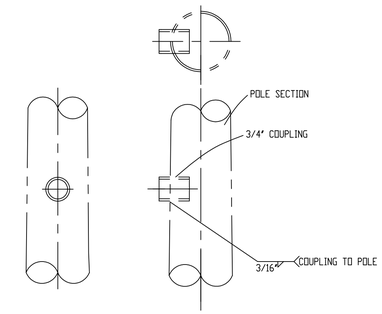

L COUPLING DETAIL
N.T.S.

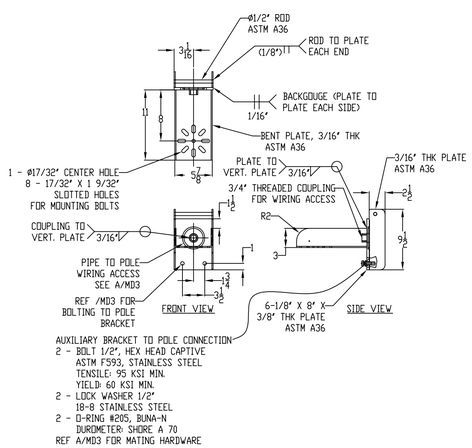

Q 1P INVERTED TRUNNION MOUNT
N.T.S. DSA-1P INV TRUNNION_A

Information contained herein is the confidential property of Musco Sports Lighting, LLC and/or its parent companies, affiliates, successors and assigns. Reproduction, distribution, or use of the information other than its limited, intended purpose without express written permission is prohibited. Musco products referenced or shown are protected by one or more of the following patents. U.S. Patents: 4947303; 4994718; 5075828; 5134557; 5161883; 5211473; 5229681; 5377611; 5398478; 5423281; 5426577; 5600537; 5794387; 5856721; 6036338; 6203176; 6250596; 6340790; 6398392; 6681110; 6833675; 6929385; 6969034; 6988697; 7059572; D337168; D353797; D353911; D411096. Other patents pending.

IDENTIFICATION STAMP
DIV. OF THE STATE ARCHITECT
APP: 02-119490 INC:
REVIEWED FOR
SS ☑ FLS ☑ ACS ☑
DATE: 09/13/2022

Davis High School Aquatics
FIELD LIGHTING
Davis, CA

REGISTERED PROFESSIONAL ENGINEER ★ STRUCTURAL ★ STATE OF CALIFORNIA
No. 4506
Exp. 6-30-23

CONSULTANT
KNA STRUCTURAL ENGINEERS
9931 Martinez Boulevard Winters, CA 95694
Tel: (916) 662-2020 Fax: (916) 662-2021
www.kna-structural.com
KNA JOB NO.: 343-873

musco Lighting
CORPORATE OFFICE:
P.O. Box 808
100 1st Avenue West
Oskaloosa, Iowa 52577
800/825-6020

DRAWING TITLE: ATTACHMENT DETAILS
SCALE: SEE PLAN
REVISIONS
REFERENCE:

PROJECT NO. 211030
DATE: 10/19/2021
DRAWN BY: H.Sabers
DRAWING NO. MD3
5 OF 6

STRU-MD3

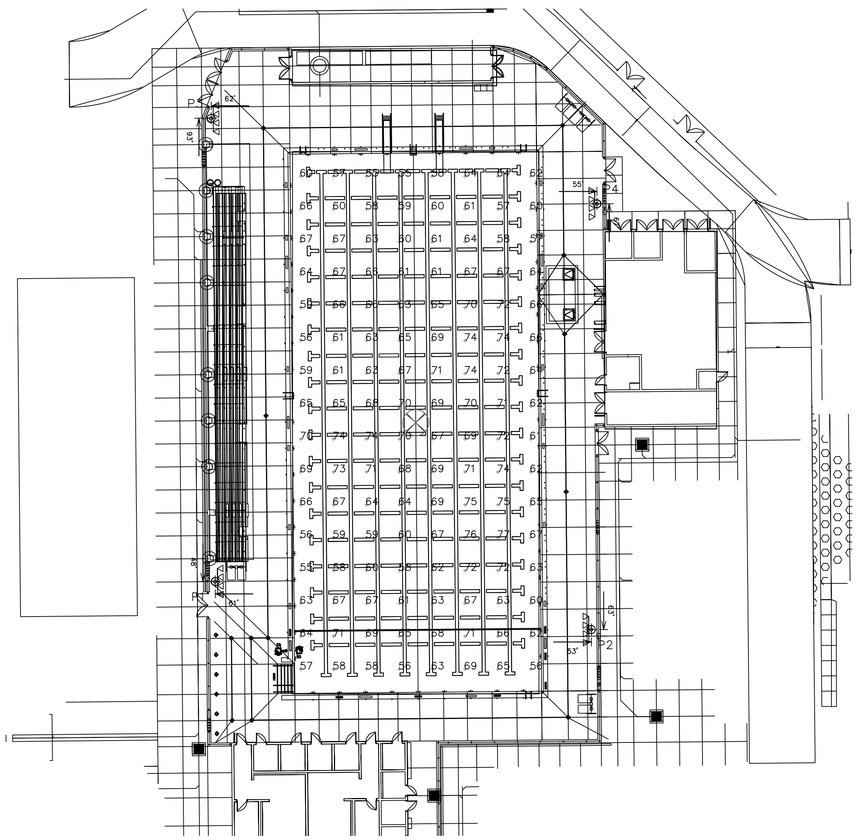

POOL LIGHTING PHOTOMETRICS

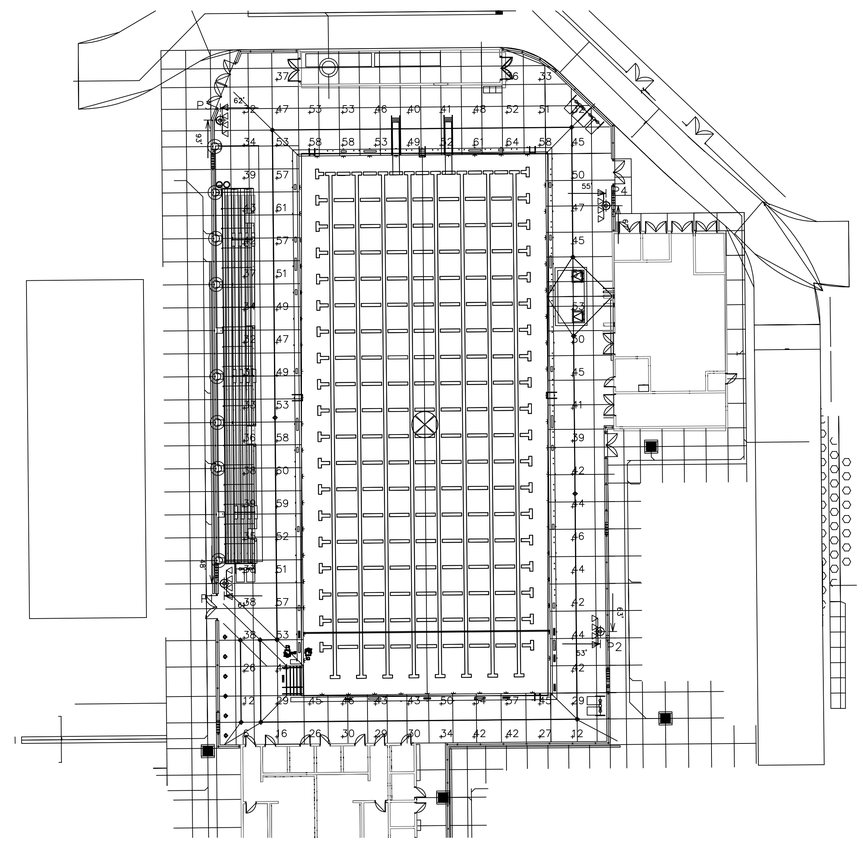

POOL DECK LIGHTING PHOTOMETRICS

Information contained herein is the confidential property of Musco Sports Lighting, LLC and/or its parent companies, affiliates, successors and assigns. Reproduction, distribution, or use of the information other than its limited, intended purpose without express written permission is prohibited. Musco products referenced or shown are protected by one or more of the following patents. U.S. Patents: 4947303; 4994718; 5075828; 5134557; 5161883; 5211473; 5229681; 5377611; 5398478; 5423281; 5426577; 5600537; 5794387; 5856721; 6036338; 6203176; 6250596; 6340790; 6398392; 6681110; 6833675; 6929385; 6969034; 6988697; 7059572; D337168; D353797; D353911; D411096. Other patents pending.

IDENTIFICATION STAMP
DIV. OF THE STATE ARCHITECT
APP: 02-119490 INC:
REVIEWED FOR
SS ☑ FLS ☑ ACS ☑
DATE: 09/13/2022

Davis High School Aquatics
FIELD LIGHTING
Davis,CA

REGISTERED PROFESSIONAL ENGINEER
No. 4506
Exp. 6-30-23
STRUCTURAL
STATE OF CALIFORNIA

CONSULTANT
KNA STRUCTURAL ENGINEERS
9931 Mariana Boulevard, Irvine, CA 92618
Tel (949) 362-2201 Fax (949) 362-2201
www.knastructural.com
KNA JOB NO.: 363.873

musco Lighting
CORPORATE OFFICE:
P.O. Box 808
100 1st Avenue West
Oskaloosa, Iowa 52577
800/825-6020

DRAWING TITLE: PHOTOMETRICS PLANS
SCALE: SEE PLAN
REVISIONS:
REFERENCE:

PROJECT NO. 211030

DATE: 3/21/2022

DRAWN BY: H.Sabers

DRAWING NO. MD4
6 OF 6

STRU-MDI

DAVIS JT UNIFIED SCHOOL DISTRICT
DAVIS SENIOR HIGH SCHOOL
DAVIS, CALIFORNIA

SHEET TITLE	SHEET NUMBER
SHEET DESCRIPTION	SHEET NUMBER
SIDE VIEW/WCA DETAILS	1
SEATING/CROSSBRACE LAYOUT	2
CONCERETE/SEAT BRACKET LAYOUT	3
GUARDRAIL/ANGLE FAB DETAILS	4
ALUM. PLANK/INSTALLATION DETAILS	5

IDENTIFICATION STAMP
DIV. OF THE STATE ARCHITECT
APP: 02-119490 INC:
REVIEWED FOR
SS ☑ FLS ☑ ACS ☑
DATE: 09/13/2022

RECEIVED PROFESSIONAL ENGINEER BRIAN T. DEAN S 6087 Exp. 06/30/23 STRUCTURAL STATE OF CALIFORNIA
S&S 04/21/22
PRINCIPAL

21348 - DAVIS, CALIFORNIA

AWS CWF CERTIFIED WELDING FABRICATOR®

AISC CERTIFIED FABRICATOR

GENERAL NOTES & SITE CONDITIONS

1. ALL DIMENSION PERTAINING TO GRANDSTAND AND SITE CONDITIONS/OBJECTS TO BE FIELD VERIFIED OR LOCATED PRIOR TO FABRICATION BY OWNER OR OWNERS REP.

2. AS SPECIFIED AND ILLUSTRATED, ALL ALUMINUM FOOTBOARDS AND WALKING SURFACES ARE MILL FINISH. MILL FINISH ALUMINUM, WHEN EXPOSED TO THE ATMOSPHERE, FORMS A TRANSPARENT, PROTECTIVE OXIDE COATING. MILL FINISH ALUMINUM WILL STAIN WHEN MOISTURE IS TRAPPED AGAINST IT. THIS MOISTURE ENTRAPMENT CAN OCCUR AT SEVERAL STAGES OF MATERIAL DELIVERY, INCLUDING PACKAGING, SHIPPING AND STORAGE. THESE STAINS CAN BE ERRATIC AND VARY IN COLOR FROM LIGHT BRONZE TO BLACK TO CHALKY WHITE. MOISTURE STAINS HAVE NO EFFECT ON THE STRENGTH OF THE MATERIAL. THESE STAINS BECOME LESS NOTICEABLE DURING NORMAL USAGE AND EXPOSURE TO THE SUN'S RADIATION.

DESIGN LOADING
TREAD & SEAT AREA 100psf UNIFORM LIVE LOAD.
SEAT (VERTICAL) 120 lbs/lf.
SEAT (HORIZONTAL SWAY) 24lbs/lf PARALLEL AND 10lbs/lf PERPENDICULAR TO SEAT.
TREAD - STAIR AND AISLE TREADS - MINIMUM CONCENTRATED LOAD OF 300LBS ON AN AREA OF 4 SQUARE INCHES
HANDRAIL & GUARDRAIL 50 lbs/lf IN ANY DIRECTION AT THE TOP.
HANDRAIL & GUARDRAIL 200 lbs CONCENTRATED IN ANY DIRECTION.
GUARDS, INFILL COMPONENTS - 50LBS PER SQFT IN HORIZONTAL DIRECTION
SNOW LOADS AS PER STATE ADOPTED CODE
WIND LOADS AS PER STATE ADOPTED CODE
SEISMIC LOADS AS PER STATE ADOPTED CODE

Southern® BLEACHER COMPANY
GRANDSTANDS ▪ BLEACHERS ▪ STADIUMS

PO Box One, Graham, Texas 76450
801 Fifth Street.
Phone: 940/549-0733 Fax: 940/549-1365

Established 1946

NOTES

1. STRUCTURAL SHAPES MEET ONE OF THE FOLLOWING ASTM SPECIFICATIONS: A36, A36/A572 GRADE 50, A572 GRADE 50, A529-50, OR A500 GRADE B.
2. WELDS ARE ALL AROUND WITH TYPE ER70S-6 WIRE MIG.
3. ALL STEEL TO BE HOT DIPPED GALVANIZED TO A.S.T.M. A-123-89 ae1.
4. STRUCTURAL BOLTS ARE HOT DIPPED GALV. AND ARE EQUAL TO OR GREATER THAN A-307.
5. NO CONNECTIONS UTILIZING HIGH STRENGTH BOLTS ARE CLASSED AS SLIP CRITICAL.
6. ANODIZED ALUMINUM RAIL IS 1 1/4" NOMINAL PIPE SIZE. (1 5/8" O.D.)
7. SOUTHERN BLEACHER COMPANY AS A MANUFACTURER AND INSTALLER OF GRANDSTAND SEATING IS NOT AUTHORIZED TO CERTIFY PLANS AS ADA COMPLIANT. HOWEVER, TO THE BEST OF OUR KNOWLEDGE THESE PLANS MEET OR EXCEED ADA REQUIREMENTS FOR QUANTITY OF ADA SEATING, ACCESS/EGRESS TO ADA SEATING, & DISPERSAL OF ADA SEATING.
8. ALL FIELD CONNECTIONS ARE NON-SLIP CRITICAL U.N.O. ALL CONNECTIONS ARE DESIGNED TO UTILIZE A307 BOLTS, IT IS ACCEPTABLE TO USE A325N BOLTS IN LIEU OF THE A307 BOLTS. THE INSTALLATION OF THESE BOLTS ARE TO BE TIGHTENED A SNUG TIGHT CONDITION AS SPECIFIED BY AISC.
9. STRUCTURE IS SHOP WELDED, FIELD BOLTED.

OWNER/REPRESENITIVE/ARCHITECTUAL REVIEW

PLEASE REVIEW THE DRAWINGS FOR COMPLIANCE WITH YOUR ORDER.
PLEASE INDICATE ANY CHANGES
OR COMMENTS ON THE DRAWINGS.

☐ APPROVED
☐ APPROVED AS NOTED
☐ REVISE AND RE-SUBMITT

SIGNATURE
TITLE
DATE

GENERAL INFORMATION	
RISE:	12"
TREAD:	24"
ROWS:	5
LENGTH:	114'-0"
SEAT COUNT:	320

DATE: 10-11-21
JOB 21348
DAVIS JT UNIFIED SCHOOL DISTRICT
DAVIS SENIOR HIGH SCHOOL
DAVIS, CALIFORNIA

NOTE: BLEACHERS PRESENTED HEREIN ARE LESS THAN 5 ROWS OF SEATS ABOVE GRADE AND IN ACCORDANCE WITH CAC 4-314 ARE NOT CONSIDERED A SCHOOL BUILDING. DRAWINGS ARE SUBMITTED FOR ACCESS COMPLIANCE REVIEW ONLY. STRUCTURAL SAFETY AND FIRE LIFE SAFETY REVIEW ARE NOT REQUIRED

LPA
ARCHITECTURE ENGINEERING INTERIORS
LANDSCAPE ARCHITECTURE PLANNING

916-287-2400 Office
916-287-2401 Fax
LPADesignStudios.com
431 I Street, Suite 107
Sacramento, California 95814

This document and all other project documents, ideas, aesthetics and designs incorporated therein are instruments of service. All project documents are copyright protected, are the property of LPA, Inc. (LPA) and cannot be lawfully used in whole or in part for any project or purpose except as set forth in the contractual agreement between LPA and its Client. The unauthorized disclosure and/or use of the project documents (including the creation of derivative works), may give rise to liability for copyright infringement, unlawful disclosure, use or misappropriation of property rights held by LPA. The unauthorized use of the project documents will give rise to the recovery of monetary losses and damages including attorney fees and costs for which the unauthorized user will be held liable.
Project documents describe the design intent of the work and are not a representation of as-built or existing conditions. LPA is not responsible for any discrepancies between the project documents and the existing conditions.

DAVIS SR HIGH SCHOOL
AQUATICS CENTER
315 W 14TH ST., Davis, CA 95616

Developed for
DAVIS JOINT UNIFIED SCHOOL DISTRICT

Revision	Date

Submittal	Date
50% DD REVIEW	06/15/2021
100% DD SUBMITTAL	07/26/2021
50% CD REVIEW	10/08/2021
100% CD DSA SUBMITTAL	10/22/2021
DSA SUBMITTAL	09/24/2022

Job Number	1904413
Date Published	10/22/2021
Checked By	AW, JC
Scale	

BLEACHER
COVER SHEET

B0.01

IDENTIFICATION STAMP
DIV. OF THE STATE ARCHITECT
APP: 02-119490 INC:
REVIEWED FOR
SS ☑ FLS ☑ ACS ☑
DATE: 09/13/2022

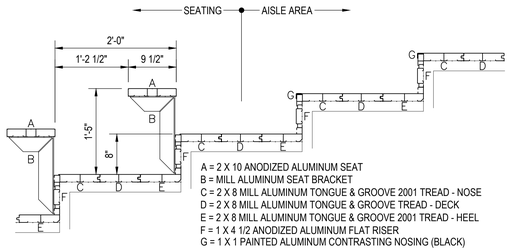

1/1 PLANK ARRANGEMENT
SCALE: 1" = 1'-0" 12" X 24"

ITEM DESCRIPTION

1. L 1 1/2 X 1 1/2 X 3/16 GALV. (50 ksi)
2. L 2 X 1 1/2 X 3/16 LLV GALV. (50 ksi)
3. L 2 X 2 X 3/16 GALV. (50 ksi)
4. L 2 1/2 X 2 X 3/16 LLV GALV. (50 ksi)
5. L 3 X 3 X 1/4 GALV. (50 ksi)
6. ANODIZED ALUMINUM RAIL (3/5)
7. 9 GAUGE GALV. CHAIN LINK FENCE (2" SQUARE MESH)
8. L 2 X 1 1/2 X 3/16 LLV ALUMINUM (6061–T6 ALLOY)
9. L 2 X 2 X 3/16 ALUMINUM (6061–T6 ALLOY)
10. 1 5/8 SCH. 40 ANODIZED ALUMINUM PIPE (6061–T6 ALLOY) (8/5)
11. 3/8Ø STAINLESS STEEL CONCRETE WEDGE ANCHOR (16/5)

SEE DETAIL (2/1) FOR WEDGE ANCHOR QUANTITY PER FRAME

DESIGN LOADING

TREAD & SEAT AREA (GROSS AREA) 100psf.
SEAT (PERPENDICULAR SWAY) 10 lbs/lf.
SEAT (PARALLEL SWAY) 24lbs/lf.
HANDRAILS (PERPENDICULAR) 50 lbs/lf.
HANDRAILS (VERTICAL) 100 lbs/lf.
SEAT & TREAD 120 lbs/lf.

NOTES

1. STRUCTURAL SHAPES MEET ONE OF THE FOLLOWING ASTM SPECIFICATIONS: A572 GRADE 50, A529-50, OR A500 GRADE B.
2. WELDS ARE ALL AROUND WITH TYPE ER70S-6 WIRE MIG.
3. ALL STEEL TO BE HOT DIPPED GALVANIZED TO A.S.T.M. A-123-89 ae1.
4. STRUCTURAL BOLTS ARE HOT DIPPED GALV. AND ARE EQUAL TO OR GREATER THAN A-307.
5. ANODIZED ALUMINUM RAIL IS 1 1/4" NOMINAL PIPE SIZE. (3/5)
6. ANODIZED ALUMINUM SCH. 40 PIPE IS 1 1/4" NOMINAL PIPE SIZE. (8/5)

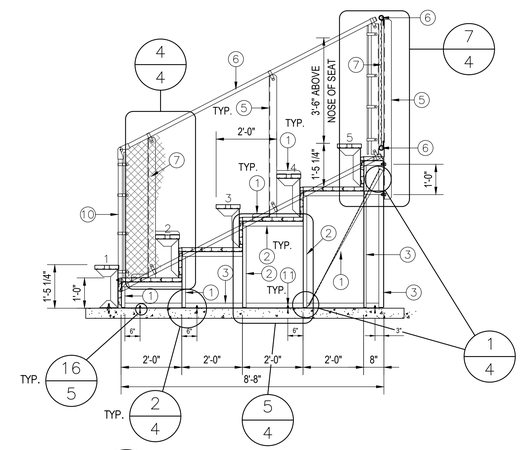

2/1 5 ROW NON-ELEVATED
SCALE:1/2"=1'-0"

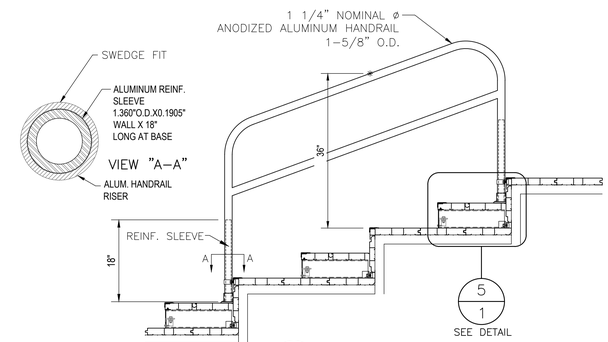

3/1 MID-AISLE INSTALLATION DETAIL
NOT TO SCALE

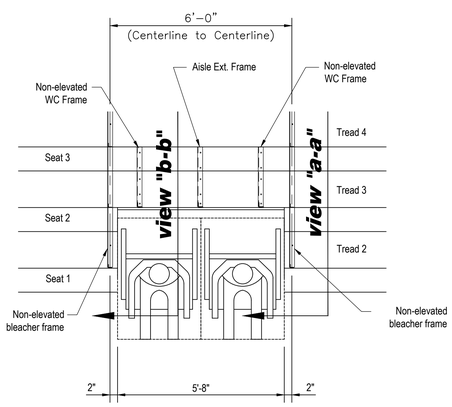

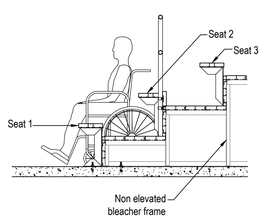

view "a-a"

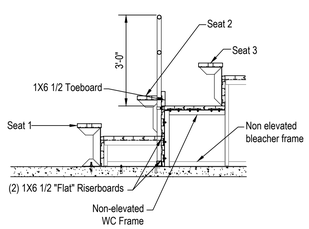

view "b-b"

4/1 TONGUE & GROOVE 2001 NON-ELEVATED WHEELCHAIR AREA DETAIL
SCALE:NONE

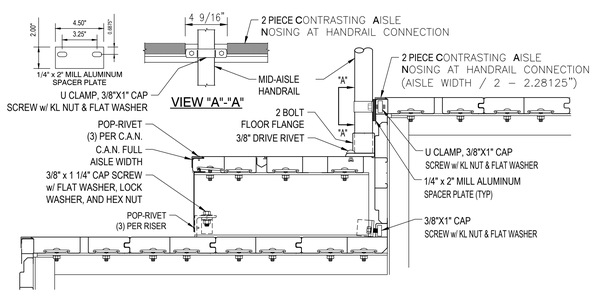

5/1 TONGUE & GROOVE 2001 HALF STEP & HANDRAIL ATTACHMENT DETAIL
NOT TO SCALE

NOTE: BLEACHERS PRESENTED HEREIN ARE LESS THAN 5 ROWS OF SEATS ABOVE GRADE AND IN ACCORDANCE WITH CAC 4-314 ARE NOT CONSIDERED A SCHOOL BUILDING. DRAWINGS ARE SUBMITTED FOR ACCESS COMPLIANCE REVIEW ONLY. STRUCTURAL SAFETY AND FIRE LIFE SAFETY REVIEW ARE NOT REQUIRED

DETAIL NUMBER / SHEET SHOWN ON / SHEET CUT FROM

THIS DRAWING AND ALL INFORMATION THEREIN IS THE PROPERTY OF THE SOUTHERN BLEACHER COMPANY, AND CONSTITUTES AN INSTRUMENT OF SERVICE. IT MAY NOT BE MADE, OR COPIED, THIS DRAWING IS LOANED SUBJECT TO RE-TURN UPON DEMAND AND, IS NOT TO BE USED FOR ANY PURPOSE NOT IN ANY WAY DETRIMENTAL TO OUR INTERESTS.

Southern® BLEACHER COMPANY
GRANDSTANDS • BLEACHERS • STADIUMS
PO Box One, Graham, Texas 76450
801 Fifth Street.
Phone: 940/549-0733 Fax: 940/549-1365
Established 1946

REGISTERED PROFESSIONAL ENGINEER BRIAN T. DEAN S 6087 Exp. 06/30/23 STRUCTURAL STATE OF CALIFORNIA
S&S 04/21/22
PRINCIPAL

REV	BY	DATE	Revision
		05/28/2126	

SIDE VIEW/WCA DETAILS

DAVIS JT UNIFIED SCHOOL DISTRICT
DAVIS SENIOR HIGH SCHOOL
DAVIS, CALIFORNIA

DATE 10/11/21 DRAWN BU CHECKED DMc
JOB NUMBER 21348
SHEET 1 OF 5

22" X 34" (11x17 = 1/2 indicated scale)

DAVIS SR HIGH SCHOOL AQUATICS CENTER
315 W 14TH ST., Davis, CA 95616

Developed for
DAVIS JOINT UNIFIED SCHOOL DISTRICT

Submittal	Date
50% DD REVIEW	06/15/2021
100% DD SUBMITTAL	07/28/2021
50% CD REVIEW	10/08/2021
100% CD DSA SUBMITTAL	10/22/2021
DSA SUBMITTAL	02/24/2022

Job Number	1904413
Date Published	10/22/2021
Checked By	AW, JC
Scale	

BLEACHER WCA DETAILS

B0.02

LPA
ARCHITECTURE ENGINEERING INTERIORS
LANDSCAPE ARCHITECTURE PLANNING
916-287-2400 Office
916-287-2401 Fax
LPADesignStudios.com
431 I Street, Suite 107
Sacramento, California 95814

This document and all other project documents, ideas, aesthetics and designs incorporated therein are instruments of service. All project documents are copyright protected, are the property of LPA, Inc. (LPA) and cannot be lawfully used in whole or in part for any project or purpose except as set forth in the contractual agreement between LPA and its Client. The unauthorized disclosure and/or use of the project documents (including the creation of derivative works), may give rise to liability for copyright infringement, unlawful disclosure, use or misappropriation of property rights held by LPA. The unauthorized use of the project documents will give rise to the recovery of monetary losses and damages including attorney fees and costs for which the unauthorized user will be held liable.
Project documents describe the design intent of the work and are not a representation of as-built or existing conditions. LPA is not responsible for any discrepancies between the project documents and the existing conditions.

314 TOTAL NET 18" SEATS
4 TOTAL NET 33" WHEELCHAIR SPACES
2 TOTAL NET 36" WHEELCHAIR SPACES
320 TOTAL SEATING CAPACITY

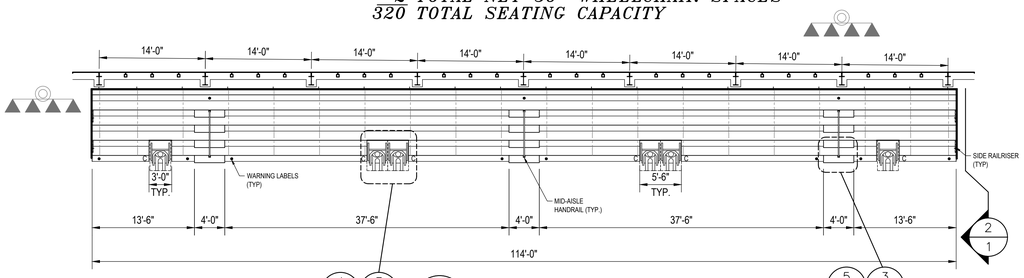

4/1 3/2 — 1/2 SEATING LAYOUT
SCALE:1/8"=1'-0"

5/1 3/1 SIM.

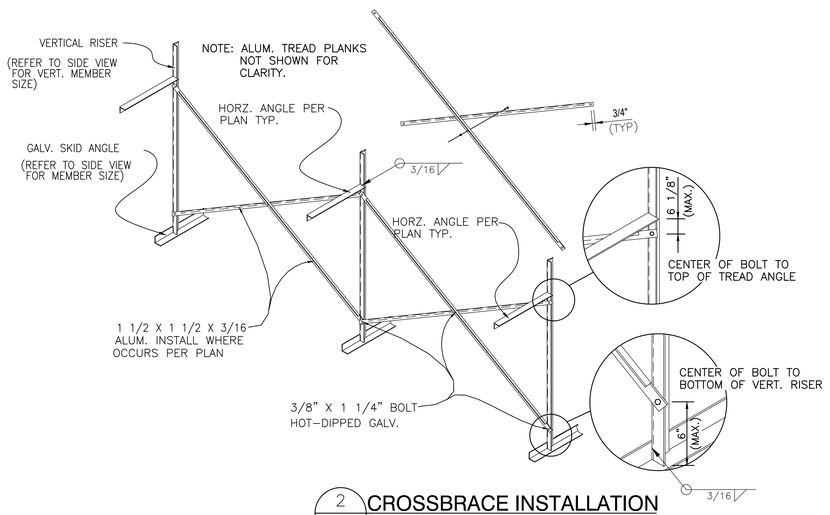

2/2 CROSSBRACE INSTALLATION
SCALE:NONE

1.USING THE LAYOUT DRAWING SUPPLIED, LAY OUT THE FRAMES WITH THE FRONTS ALIGNED. THE FRAMES SHOULD BE ON LEVEL GROUND AND APPROXIMATELY 6 FT. APART.

2. BOLT ALL CROSSBRACE ANGLES OF EQUAL LENGTH TOGETHER IN PAIRS, USING 3/8" X 1 1/4" CAP SCREW, HEX NUT & LOCK WASHER THROUGH THE CENTER HOLES.

3. START STANDING UP THE FRAMES AND INSTALLING THE CROSSBRACES AS PER THE LAYOUT DRAWING USING 3/8" X 1 1/4" CAP SCREW FOR ALL CONNECTIONS.

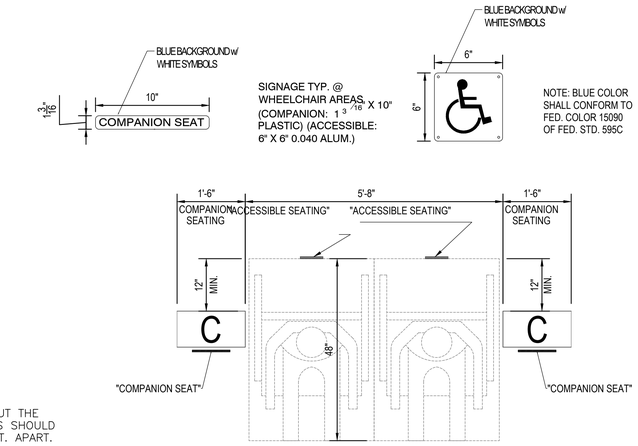

3/2 WHEELCAIR AREA DETAIL
NOT TO SCALE

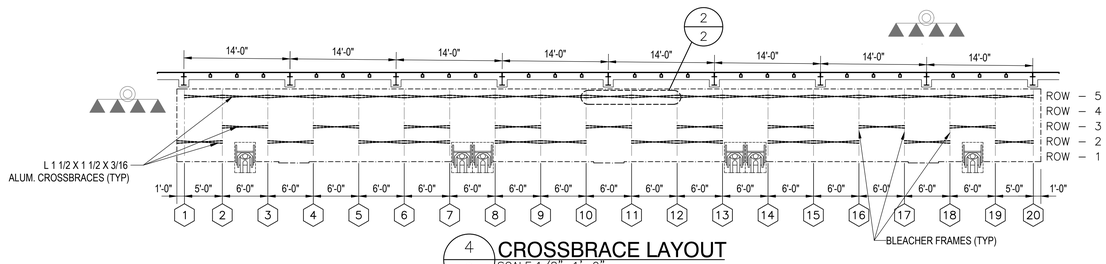

4/2 CROSSBRACE LAYOUT
SCALE:1/8"=1'-0"

NOTE: BLEACHERS PRESENTED HEREIN ARE LESS THAN 5 ROWS OF SEATS ABOVE GRADE AND IN ACCORDANCE WITH CAC 4-314 ARE NOT CONSIDERED A SCHOOL BUILDING. DRAWINGS ARE SUBMITTED FOR ACCESS COMPLIANCE REVIEW ONLY. STRUCTURAL SAFETY AND FIRE LIFE SAFETY REVIEW ARE NOT REQUIRED

DETAIL NUMBER / SHEET SHOWN ON / SHEET CUT FROM

THIS DRAWING AND ALL INFORMATION THEREIN IS THE PROPERTY OF THE SOUTHERN BLEACHER COMPANY AND IS CONFIDENTIAL AND MUST NOT BE MADE PUBLIC OR COPIED. THIS DRAWING IS LOANED SUBJECT TO RE-TURN UPON DEMAND AND SHALL NOT BE USED DIRECTLY OR INDIRECTLY IN ANY WAY DETRIMENTAL TO OUR INTERESTS.

Southern BLEACHER COMPANY
GRANDSTANDS • BLEACHERS • STADIUMS
PO Box One, Graham, Texas 76450
801 Fifth Street
Phone: 940/549-0753 Fax: 940/549-1365
Established 1946

REGISTERED PROFESSIONAL ENGINEER BRIAN T. DEAN S 6087 Exp. 06/30/23 STRUCTURAL STATE OF CALIFORNIA
S&S 04/21/22
PRINCIPAL

SITE: SEATING/CROSSBRACE LAYOUT
CITY: DAVIS JT UNIFIED SCHOOL DISTRICT
DAVIS SENIOR HIGH SCHOOL
DAVIS, CALIFORNIA

REV	BY	DATE	DESCRIPTION

DATE	DRAWN	CHECKED
10/11/21	BU	DMc

JOB NUMBER 21348
SHEET 2 OF 5

22" X 34" (11x17 = 1/2 indicated scale)

IDENTIFICATION STAMP
DIV. OF THE STATE ARCHITECT
APP: 02-119490 INC:
REVIEWED FOR
SS ☑ FLS ☑ ACS ☑
DATE: 09/13/2022

LPA
ARCHITECTURE ENGINEERING INTERIORS
LANDSCAPE ARCHITECTURE PLANNING
916-287-2400 Office
916-287-2401 Fax
LPADesignStudios.com
431 I Street, Suite 107
Sacramento, California 95814

This document and all other project documents, ideas, aesthetics and designs incorporated therein are instruments of service. All project documents are copyright protected, are the property of LPA, Inc. (LPA) and cannot be lawfully used in whole or in part for any project or purpose except as set forth in the contractual agreement between LPA and its Client. The unauthorized disclosure and/or use of the project documents (including the creation of derivative works), may give rise to liability for copyright infringement, unlawful disclosure, use or misappropriation of property rights held by LPA. The unauthorized use of the project documents will give rise to the recovery of monetary losses and damages including attorney fees and costs for which the unauthorized user will be held liable.
Project documents describe the design intent of the work and are not a representation of as-built or existing conditions. LPA is not responsible for any discrepancies between the project documents and the existing conditions.

DAVIS SR HIGH SCHOOL
AQUATICS CENTER
315 W 14TH ST., Davis, CA 95616

Developed for
DAVIS JOINT UNIFIED SCHOOL DISTRICT

Revision	Date

Submittal	Date
50% DD REVIEW	08/15/2021
100% DD SUBMITTAL	07/26/2021
50% CD REVIEW	10/08/2021
100% CD DSA SUBMITTAL	10/22/2021
DSA SUBMITTAL	03/24/2022

Job Number	1904413
Date Published	10/22/2021
Checked By	AW, JC
Scale	

BLEACHER LAYOUT

B1.01

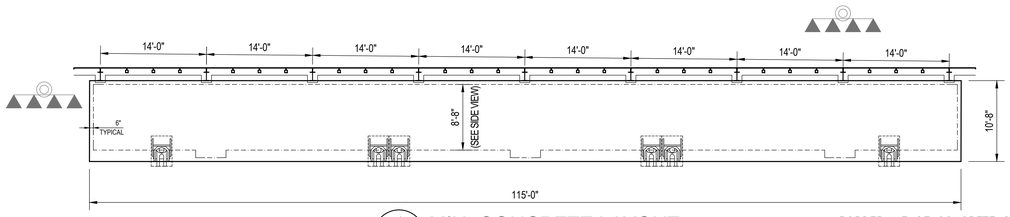

1/3 MIN. CONCRETE LAYOUT
SCALE:1/8"=1'-0"

= BORDERLINE OF CONCRETE SLAB
= BORDERLINE OF GRANDSTAND

NOTE: 1. CONCRETE SLAB DIMENSIONS LISTED ARE MINIMUM REQUIREMENTS FOR ANGLE FRAME BLEACHER SUBSTRUCTURE INSTALLATION. NOTE THAT ADDITIONAL CONCRETE MUST BE ADDED FOR WHEELCHAIR ACCESS. ALL CONCRETE WORK IS BY OTHERS & NOT BY BLEACHER MANUFACTURER.

2. CONCRETE SLAB ON GRADE TO BE LEVEL. BLEACHERS ARE DESIGNED FOR INSTALLATION ON UNIFORM, LEVEL SURFACE.

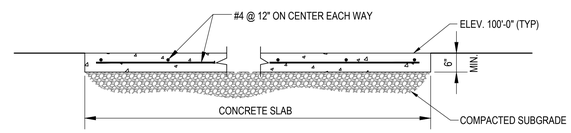

2/3 CONCRETE SLAB DETAIL
SCALE:NONE

ANGLE FRAME UNITS MUST BE ANCHORED TO RESIST WIND LOADS, AS PRESCRIBED BY BUILDING CODE.

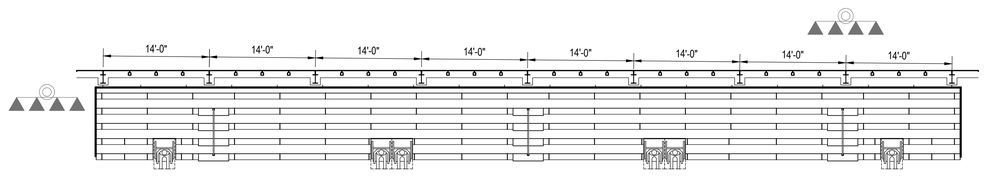

NOTE: SEAT BRACKET SPACING NOT TO EXCEED 6'-0" O.C. AND OVERHANG NOT TO EXCEED 1'-6". ALL SINGLE SPAN LOCATIONS, 3'-0" OR MORE TO HAVE (1) EXTRA BRACKET.

3/3 SEAT BRACKET LAYOUT
SCALE:1/8"=1'-0"

NOTE: BLEACHERS PRESENTED HEREIN ARE LESS THAN 5 ROWS OF SEATS ABOVE GRADE AND IN ACCORDANCE WITH CAC 4-314 ARE NOT CONSIDERED A SCHOOL BUILDING. DRAWINGS ARE SUBMITTED FOR ACCESS COMPLIANCE REVIEW ONLY. STRUCTURAL SAFETY AND FIRE LIFE SAFETY REVIEW ARE NOT REQUIRED

DETAIL NUMBER / SHEET SHOWN ON / SHEET CUT FROM

THIS DRAWING AND ALL INFORMATION THEREIN IS THE PROPERTY OF THE SOUTHERN BLEACHER COMPANY, AND EXPRESSLY WITHOUT BEING REPRODUCED OR COPIED. THIS DRAWING IS LOANED SUBJECT TO RE-TURN UPON DEMAND AND, IS NOT TO BE USED DIRECTLY OR INDIRECTLY IN ANY WAY DETRIMENTAL TO OUR INTERESTS.

Southern® BLEACHER COMPANY
GRANDSTANDS •BLEACHERS •STADIUMS
PO Box One, Graham, Texas 76450
801 Fifth Street.
Phone: 940/549-0733 Fax: 940/549-1365
Established 1936

REGISTERED PROFESSIONAL ENGINEER BRIAN T. DEAN S 6087 Exp. 06/30/23 STRUCTURAL STATE OF CALIFORNIA
S&S 04/21/22
PRINCIPAL

NO	BY	DATE	DESCRIPTION

TITLE: CONCRETE/SEAT BRACKET LAYOUT

SITE: DAVIS JT UNIFIED SCHOOL DISTRICT
DAVIS SENIOR HIGH SCHOOL
DAVIS, CALIFORNIA

DATE	DRAWN	CHECKED
10/11/21	BU	DMc

JOB NUMBER 21348

SHEET 3 OF 5

22" X 34" (11x17 = 1/2 indicated scale)

IDENTIFICATION STAMP
DIV. OF THE STATE ARCHITECT
APP: 02-119490 INC:
REVIEWED FOR
SS ☑ FLS ☑ ACS ☑
DATE: 09/13/2022

LPA
ARCHITECTURE ENGINEERING INTERIORS
LANDSCAPE ARCHITECTURE PLANNING
916-287-2400 Office
916-287-2401 Fax
LPADesignStudios.com
431 I Street, Suite 107
Sacramento, California 95814

This document and all other project documents, ideas, aesthetics and designs incorporated therein are instruments of service. All project documents are copyright protected, are the property of LPA, Inc. (LPA) and cannot be lawfully used in whole or in part for any project or purpose except as set forth in the contractual agreement between LPA and its Client. The unauthorized disclosure and/or use of the project documents (including the creation of derivative works), may give rise to liability for copyright infringement, unlawful disclosure, use or misappropriation of property rights held by LPA. The unauthorized use of the project documents will give rise to the recovery of monetary losses and damages including attorney fees and costs for which the unauthorized user will be held liable.
Project documents describe the design intent of the work and are not a representation of as-built or existing conditions. LPA is not responsible for any discrepancies between the project documents and the existing conditions.

DAVIS SR HIGH SCHOOL
AQUATICS CENTER
315 W 14TH ST., Davis, CA 95616

Developed for
DAVIS JOINT UNIFIED SCHOOL DISTRICT

Revision	Date

Submittal	Date
50% DD REVIEW	06/15/2021
100% DD SUBMITTAL	07/26/2021
50% CD REVIEW	10/08/2021
100% CD DSA SUBMITTAL	10/22/2021
DSA SUBMITTAL	03/24/2022

Job Number	1904413
Date Published	10/22/2021
Checked By	AW, JC
Scale	

BLEACHER LAYOUT

B1.02

IDENTIFICATION STAMP
DIV. OF THE STATE ARCHITECT
APP: 02-119490 INC:
REVIEWED FOR
SS ☑ FLS ☑ ACS ☑
DATE: 09/13/2022

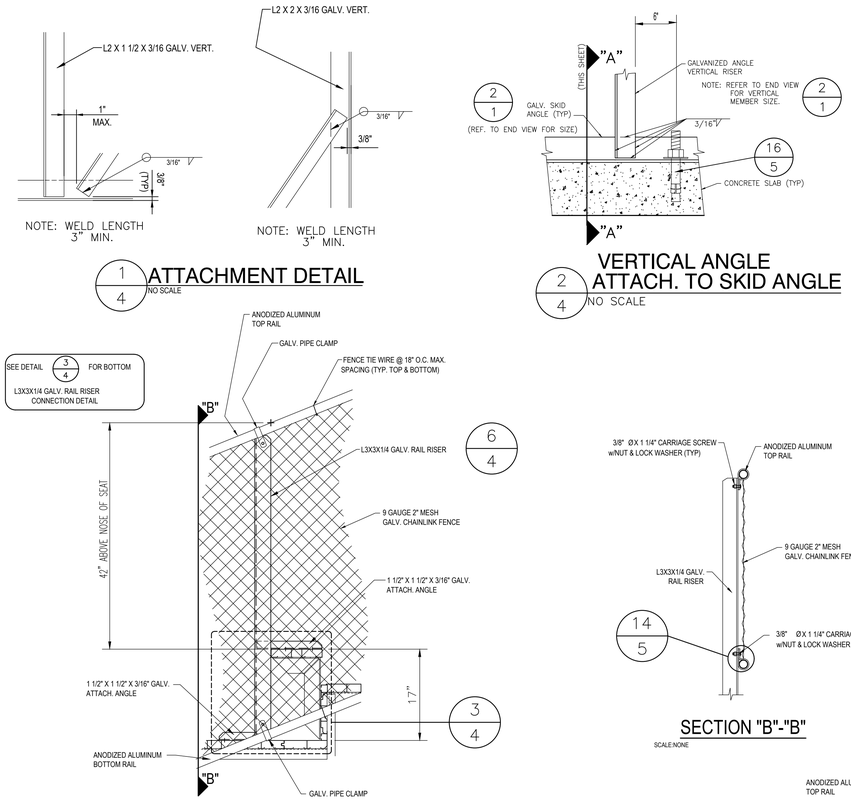

1/4 ATTACHMENT DETAIL
NO SCALE

2/4 VERTICAL ANGLE ATTACH. TO SKID ANGLE
NO SCALE

SECTION "A"–"A"
NO SCALE

3/4 SIDE RAILRISER ATTCHMENT
NO SCALE
(NOTE: 5/16" X 1" CARRIAGE SCREW W/PLANK CLIP OMITTED FOR CLARITY)

4/4 SIDE GUARDRAILING DETAILS
SCALE:NONE

SECTION "B"-"B"
SCALE:NONE

5/4 ANGLE FAB DETAIL
NO SCALE

6/4 SIDE RAIL RISER WELD DETAIL
NO SCALE

7/4 BACK RAILRISER ATTACHMENT DETAIL
SCALE:NONE

DETAIL NUMBER / SHEET SHOWN ON / SHEET CUT FROM

THIS DRAWING AND ALL INFORMATION THEREIN IS THE PROPERTY OF THE SOUTHERN BLEACHER COMPANY, AND CONSTITUTES AN ORIGINAL WORK OF AUTHORSHIP. THIS DRAWING IS LOANED SUBJECT TO RE-TURN UPON DEMAND AND, IS NOT TO BE USED OR COPIED IN WHOLE OR IN PART WITHOUT WRITTEN CONSENT TO OUR INTERESTS.

Southern® BLEACHER COMPANY
GRANDSTANDS •BLEACHERS •STADIUMS
PO Box One; Graham, Texas 76450
801 Fifth Street.
Phone: 940/549-0733 Fax: 940/549-1365
Established 1946

REGISTERED PROFESSIONAL ENGINEER BRIAN T. DEAN S 6087 Exp. 06/30/23 STRUCTURAL STATE OF CALIFORNIA
S&S 04/21/22
PRINCIPAL

REV	DATE	DESCRIPTION

TITLE: GUARDRAIL/ANGLE FAB DETAILS
PROJECT: DAVIS JT UNIFIED SCHOOL DISTRICT
DAVIS SENIOR HIGH SCHOOL
DAVIS, CALIFORNIA

DATE	DRAWN	CHECKED
10/11/21	BU	DMc

JOB NUMBER 21348
SHEET 4 OF 5

22" X 34" (1"=1/2 indicated scale)

NOTE: BLEACHERS PRESENTED HEREIN ARE LESS THAN 5 ROWS OF SEATS ABOVE GRADE AND IN ACCORDANCE WITH CAC 4-314 ARE NOT CONSIDERED A SCHOOL BUILDING. DRAWINGS ARE SUBMITTED FOR ACCESS COMPLIANCE REVIEW ONLY. STRUCTURAL SAFETY AND FIRE LIFE SAFETY REVIEW ARE NOT REQUIRED

LPA
ARCHITECTURE ENGINEERING INTERIORS
LANDSCAPE ARCHITECTURE PLANNING

916-287-2400 Office
916-287-2401 Fax
LPADesignStudios.com
431 I Street, Suite 107
Sacramento, California 95814

This document and all other project documents, ideas, aesthetics and designs incorporated therein are instruments of service. All project documents are copyright protected, are the property of LPA, Inc. (LPA) and cannot be lawfully used in whole or in part for any project or purpose except as set forth in the contractual agreement between LPA and its Client. The unauthorized disclosure and/or use of the project documents (including the creation of derivative works), may give rise to liability for copyright infringement, unlawful disclosure, use or misappropriation of property rights held by LPA. The unauthorized use of the project documents will give rise to the recovery of monetary losses and damages including attorney fees and costs for which the unauthorized user will be held liable. Project documents describe the design intent of the work and are not a representation of as-built or existing conditions. LPA is not responsible for any discrepancies between the project documents and the existing conditions.

DAVIS SR HIGH SCHOOL AQUATICS CENTER
315 W 14TH ST., Davis, CA 95616

Developed for
DAVIS JOINT UNIFIED SCHOOL DISTRICT

Revision	Date

Submittal	Date
50% DD REVIEW	06/15/2021
100% DD SUBMITTAL	07/26/2021
50% CD REVIEW	10/08/2021
100% CD DSA SUBMITTAL	10/22/2021
DSA SUBMITTAL	02/24/2022

Job Number	1904413
Date Published	10/22/2021
Checked By	AW, JC
Scale	

BLEACHER DETAILS

B2.01

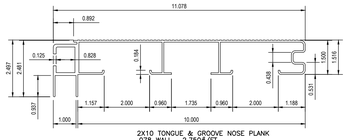

2X10 TONGUE & GROOVE NOSE PLANK
.078 WALL , 2.750#/FT.
1. Ix = 1.05 IN. $\pm$-4
2. MATERIAL – 6063 T–6
3. MIN. MAT. PROP. – 25000 PSI
4. E = 10,000,000 PSI
5. C = .913 IN.

1/5 2 X 10 TONGUE & GROOVE ALUMINUM NOSE PLANK DETAIL
NOT TO SCALE

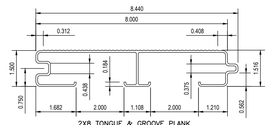

2X8 TONGUE & GROOVE PLANK
.078 WALL , 1.71#/FT.
1. Ix = .610 IN. $\pm$-4
2. MATERIAL – 6063 T–6
3. MIN. MAT. PROP. – 25000 PSI
4. E = 10,000,000 PSI
5. C = .326 IN.

2/5 2 X 8 ALUMINUM TONGUE & GROOVE PLANK DETAIL
NOT TO SCALE

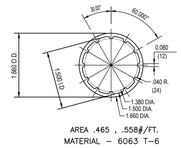

AREA .465 , .558#/FT.
MATERIAL – 6063 T–6

3/5 1 5/8" O.D. ALUMINUM RAIL DETAIL
SCALE: NONE

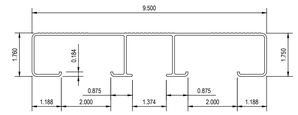

2X10 HEAVY ALUMINUM PLANK
.075 WALL , 1.769#/FT.
1. Ix = .843 IN. $\pm$-4
2. MATERIAL – 6063 T–6
3. MIN. MAT. PROP. – 25000 PSI
4. E = 10,000,000 PSI
5. C = 1.10 IN.

4/5 2 X 10 HEAVY ALUMINUM PLANK DETAIL
NOT TO SCALE

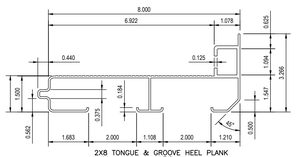

2X8 TONGUE & GROOVE HEEL PLANK
.078 WALL , 2.145#/FT.
1. Ix = 1.18 IN. $\pm$-4
2. MATERIAL – 6063 T–6
3. MIN. MAT. PROP. – 25000 PSI
4. E = 10,000,000 PSI
5. C = 1.277 IN.

5/5 2 X 8 TONGUE & GROOVE ALUMINUM HEEL PLANK DETAIL
NOT TO SCALE

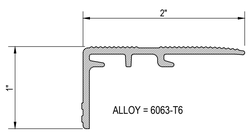

ALLOY = 6063-T6

6/5 ALUMINUM AISLE NOSING
NOT TO SCALE

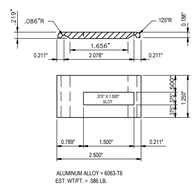

ALUMINUM ALLOY = 6063-T6
EST. WT/FT. = .586 LB.

7/5 HOLD DOWN CLIP DETAIL
NOT TO SCALE

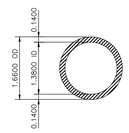

1. MATERIAL – 6063 T–6

8/5 SCHED. 40 ALUMINUM PIPE DETAIL
NOT TO SCALE

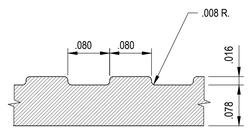

NOTE: TYPICAL FOR ALL PLANKS.

9/5 FLUTED SURFACE DETAIL
NOT TO SCALE

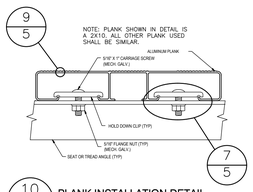

10/5 PLANK INSTALLATION DETAIL
NOT TO SCALE

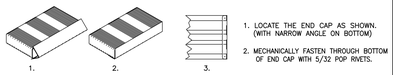

1. LOCATE THE END CAP AS SHOWN. (WITH NARROW ANGLE ON BOTTOM)
2. MECHANICALLY FASTEN THROUGH BOTTOM OF END CAP WITH 5/32 POP RIVETS.

11/5 ANGLE END CAP INSTALLATION @ SIDE RAIL RISER
NOT TO SCALE

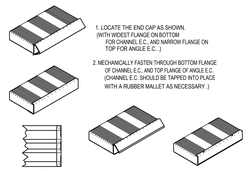

1. LOCATE THE END CAP AS SHOWN. (WITH WIDEST FLANGE ON BOTTOM FOR CHANNEL E.C., AND NARROW FLANGE ON TOP FOR ANGLE E.C..)
2. MECHANICALLY FASTEN THROUGH BOTTOM FLANGE OF CHANNEL E.C., AND TOP FLANGE OF ANGLE E.C. (CHANNEL E.C. SHOULD BE TAPPED INTO PLACE WITH A RUBBER MALLET AS NECESSARY .)

12/5 ENDCAP INSTALLATION DETAIL
NOT TO SCALE

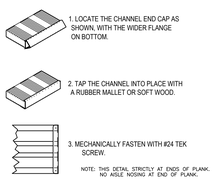

1. LOCATE THE CHANNEL END CAP AS SHOWN. WITH THE WIDER FLANGE ON BOTTOM.
2. TAP THE CHANNEL INTO PLACE WITH A RUBBER MALLET OR SOFT WOOD.
3. MECHANICALLY FASTEN WITH #24 TEK SCREW.

NOTE: THIS DETAIL STRICTLY AT ENDS OF PLANK. NO AISLE NOSING AT END OF PLANK.

13/5 CHANNEL END CAP INSTALLATION
SCALE:NONE

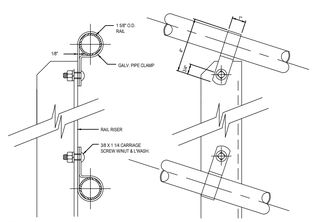

14/5 GUARDRAIL INSTALLATION
SCALE:NONE

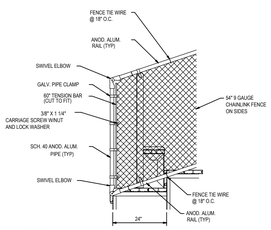

15/5 FENCE INSTALLATION
SCALE:NONE

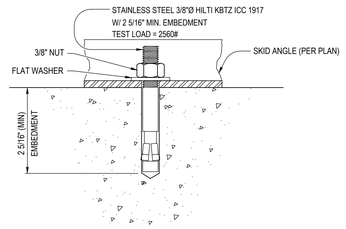

16/5 WEDGE ANCHOR DETAIL
NO SCALE

NOTE: BLEACHERS PRESENTED HEREIN ARE LESS THAN 5 ROWS OF SEATS ABOVE GRADE AND IN ACCORDANCE WITH CAC 4-314 ARE NOT CONSIDERED A SCHOOL BUILDING. DRAWINGS ARE SUBMITTED FOR ACCESS COMPLIANCE REVIEW ONLY. STRUCTURAL SAFETY AND FIRE LIFE SAFETY REVIEW ARE NOT REQUIRED

DETAIL NUMBER / SHEET SHOWN ON / SHEET CUT FROM

THIS DRAWING AND ALL INFORMATION THEREIN IS THE PROPERTY OF THE SOUTHERN BLEACHER COMPANY. ANY REPRODUCTION MUST BE MADE ONLY OR COPIED. THIS DRAWING IS LOANED SUBJECT TO RE-TURN UPON DEMAND AND, IS NOT TO BE USED DIRECTLY OR INDIRECTLY IN ANY WAY DETRIMENTAL TO OUR INTERESTS.

Southern® BLEACHER COMPANY
GRANDSTANDS •BLEACHERS •STADIUMS
PO Box One, Graham, Texas 76450
801 Fifth Street.
Phone: 940/549-0733 Fax: 940/549-1365
Established 1946

REGISTERED PROFESSIONAL ENGINEER BRIAN T. DEAN S 6087 Exp. 06/30/23 STRUCTURAL STATE OF CALIFORNIA
S&S 04/21/22
PRINCIPAL

REV	BY	DATE	DESCRIPTION

ALUM. PLANK/INSTALLATION DETAILS

DAVIS JT UNIFIED SCHOOL DISTRICT
DAVIS SENIOR HIGH SCHOOL
DAVIS, CALIFORNIA

DATE 10/11/21 | DRAWN BU | CHECKED DMc
JOB NUMBER 21348
SHEET 5 OF 5

22" X 34" (11X17 = 1/2 indicated scale)

IDENTIFICATION STAMP
DIV. OF THE STATE ARCHITECT
APP: 02-119490 INC:
REVIEWED FOR
SS ☑ FLS ☑ ACS ☑
DATE: 09/13/2022

LPA
ARCHITECTURE ENGINEERING INTERIORS
LANDSCAPE ARCHITECTURE PLANNING
916-287-2400 Office
916-287-2401 Fax
LPADesignStudios.com
431 I Street, Suite 107
Sacramento, California 95814

This document and all other project documents, ideas, aesthetics and designs incorporated therein are instruments of service. All project documents are copyright protected, are the property of LPA, Inc. (LPA) and cannot be lawfully used in whole or in part for any project or purpose except as set forth in the contractual agreement between LPA and its Client. The unauthorized disclosure and/or use of the project documents (including the creation of derivative works), may give rise to liability for copyright infringement, unlawful disclosure, use or misappropriation of property rights held by LPA. The unauthorized use of the project documents will give rise to the recovery of monetary losses and damages including attorney fees and costs for which the unauthorized user will be held liable. Project documents describe the design intent of the work and are not a representation of as-built or existing conditions. LPA is not responsible for any discrepancies between the project documents and the existing conditions.

DAVIS SR HIGH SCHOOL
AQUATICS CENTER
315 W 14TH ST., Davis, CA 95616

Developed for
DAVIS JOINT UNIFIED SCHOOL DISTRICT

Revision	Date

Submittal	Date
50% DD REVIEW	08/15/2021
100% DD SUBMITTAL	07/26/2021
50% CD REVIEW	10/08/2021
100% CD DSA SUBMITTAL	10/22/2021
DSA SUBMITTAL	03/24/2022

Job Number	1904413
Date Published	10/22/2021
Checked By	AW, JC
Scale	

BLEACHER DETAILS

B2.02